NRAO NEWSLETTER

1 October 1990 No. 45

THE GREEN BANK TELESCOPE

STATUS OF THE GBT

The staff for the Green Bank Telescope has been engaged in an active exchange of information with potential contractors. Questions have arisen since the Pre-Bid Conference held in Green Bank in June 1990. These have been answered. Design refinements have also been underway; these too have been communicated to the potential contractors.

The refinements in design have been concentrated on the feed support arm, the focus adjustment mechanisms it supports, and the alidade structure. A major goal has been to reduce the total weight of the structure. Laser-ranging tests, reported elsewhere, have also been initiated in Green Bank.

Based upon the detailed and informed questions that have been raised by possible bidders, NRAO/AUI anticipates receiving an adequate number of serious bids to establish a competitive situation. Speculation will have ended by the time this Newsletter is being read, however, since bids are due October 1, 1990.

A Science Working Group consisting of scientists outside NRAO meets regularly by teleconference. Their advice and discussion assists the project team in choosing among various options.

A bid evaluation process has been established within NRAO. Separate teams have been appointed to assess business, structural, servo, scientific, and business aspects of each bid. Their recommendations will be submitted to a Contract Evaluation Team appointed by the Director to assist his decision.

G. A. SEIELSTAD

A SURFACE-MEASURING SYSTEM FOR THE GBT

One of the novel features proposed for the Green Bank Telescope is the active surface. Mounting the surface panels to the backup structure with motorized actuators will permit the continuous adjustment of the surface and so compensate for deformations due to gravity and temperature changes.

After the initial manual setting of the surface, we plan to use microwave holography to accurately set the surface using the actuators. During this process a metrology system on the telescope will record the position of points on the telescope surface above each actuator. This will provide the reference for the active surface, and deviations from this reference surface will be measured and corrected. This method does not require the measurement of the absolute shape of the reflector but rather changes from a shape determined by a metrology method well suited to absolute measurement (holography). It is obviously advantageous if the surface measurement system can also be used to reference the surface to points on the ground and so provide pointing information.

One method of implementing such a system has been suggested and is shown in Figure 1. Three rangefinders are mounted on the feed support structure as shown. Each of these rangefinders can measure a range to any chosen point on the surface or the range to either of the neighboring rangefinders. The triangle formed by these rangefinders provides a reference plane for both the surface and pointing measurements. The position of any measurement point on the surface with respect to the reference plane may be determined by triangulation, and the position of the reference plane with respect to the ground may be measured by four range measurements from fixed points on the ground.

The implementation of such a system depends on the availability of an instrument capable of measuring ranges of up to 120 meters with an accuracy of 75 microns in less than one second. Early work at NRAO and elsewhere suggested that a modulated laser system may be capable of such performance. Accordingly, a prototype system has been constructed and tested on an outdoor test range in Green Bank. The principle of the ranging instrument is basically simple. A collimated light source is amplitude modulated, transmitted over the path to be measured, and reflected back to the instrument. The phase of the modulation envelope is measured with respect to a

The NRAO Newsletter is published quarterly by the National Radio Astronomy Observatory, Edgemont Road, Charlottesville, VA 22903-2475 USA. NRAO is operated by Associated Universities, Inc., under agreement with the National Science Foundation.

reference, the phase shift being proportional to the total distance traveled. The prototype instrument uses an infrared laser diode modulated at 1.5 GHz. The instrument was initially set up at a range of 60 meters and the output recorded as the path length was changed. The initial tests successfully measured a 762 μm displacement with rms of only 11 μm (in a 1 Hz bandwidth), which result mainly from small-scale turbulence in the atmosphere. Further tests on the instrument at this range under a variety of weather conditions yielded noise values between 8 and 25 microns. Linearity checks were also satisfactory.

After these initial measurements, the range was increased to 120 m and the measurements repeated. With the addition of a PC to the test setup, more sophisticated measurement and analysis became possible. Figures 2 and 3 show the result of analyzing one hour's worth of data on a stationary target at a range of 120 m with a range measurement made once per second. The rms value of the first 60 data points was calculated and the point plotted. Then the rms of points 2 through 61 were calculated, plotted, and so on. The distribution of the rms values obtained in a one-hour set of measurements is shown in Figure 3, and the peak may be seen to be at around 20 microns. Repeats of this experiment under different weather conditions gave results from 15 to 35 microns.

The tentative conclusion drawn from these initial experiments is that small-scale turbulence in the atmosphere will not limit the performance of the instrument. Work is now proceeding on a computer-controlled mirror that will enable the laser beam to be directed to retroreflectors at different locations. The final stage of these initial tests will be to remotely set an actuator-equipped test panel to the required precision using the laser ranging system. We hope to accomplish this in the next two months.

J. M. PAYNE

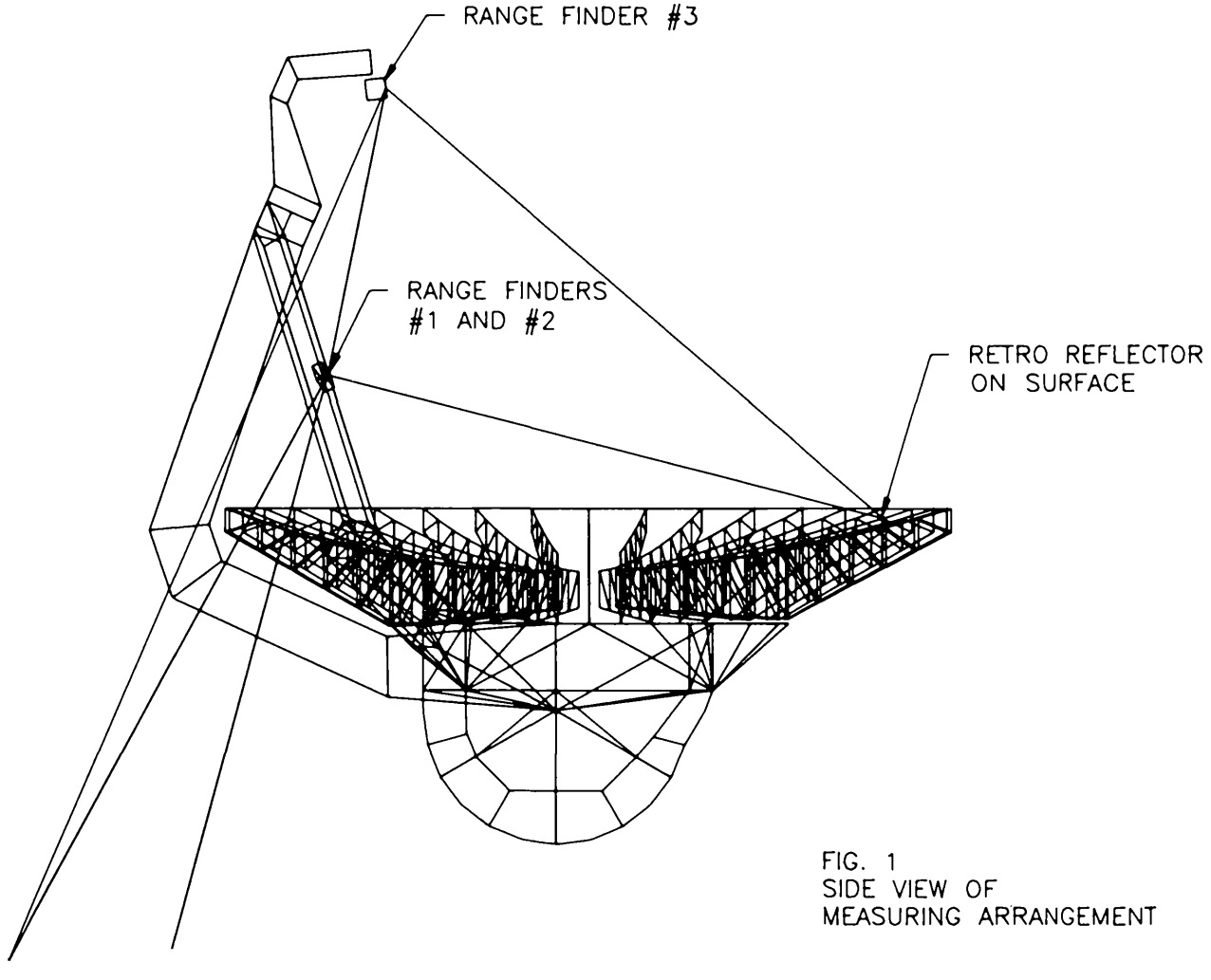

Figure 1. Side view of measuring arrangement.

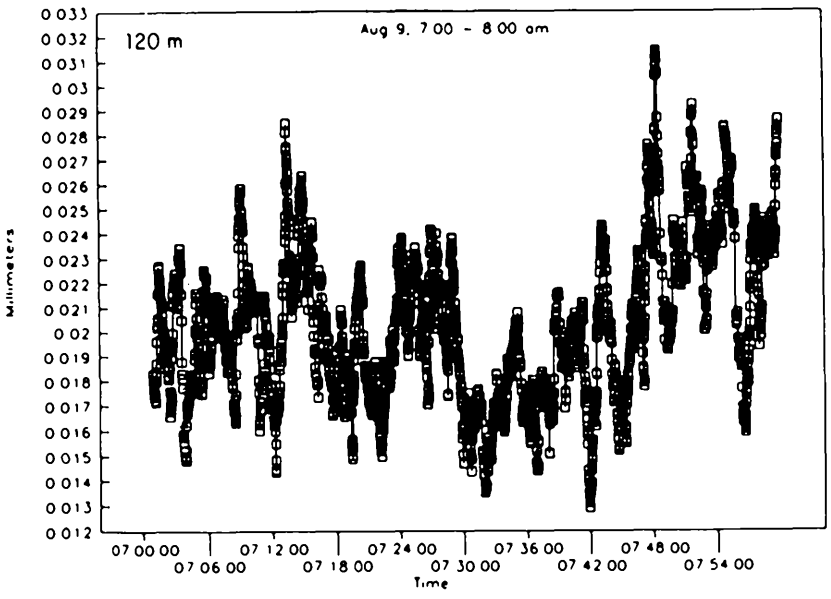

Figure 2. rms of 60 second running window.

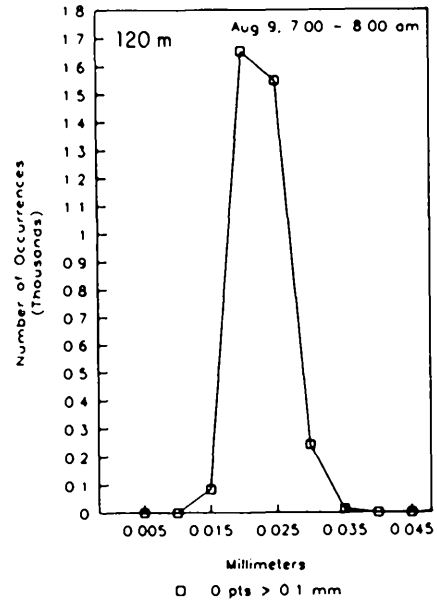

Figure 3. rms of 60 second running window.

GREEN BANK

300 TO 1000 MHz RECEIVER IMPROVEMENT

The 800 to 820 MHz band has been heavily used by pulsar observers recently. In response to a request to improve sensitivity in this band, two amplifiers supplied by Tap Lum and Don Backer were installed. The amplifiers were mounted on the seldom used 500 to 750 MHz cold station in the dewar. The resulting system thus has two pairs of amplifiers in this range, the old 750 to 1000 MHz pair and the newer pair which covers 750 to 850 MHz with enhanced sensitivity. The 500 to 750 MHz amplifiers can be installed on request, given a two week lead time. With the new amplifiers, the receiver has receiver temperature of 13.2 K and 11.8 K and system temperatures of approximately 45 K, an improvement of roughly 15 K.

R. J. LACASSE

IN GENERAL

ANNOUNCEMENT

I am pleased to announce the appointment of Geoffrey A. Croes as Assistant Director for Computing Systems. Geoff comes to NRAO from the Dominion Radio Astrophysical Observatory, Penticton, Canada, where he managed computing systems for fourteen years. His involvement in astronomical computing at DRAO followed a twenty-five year career with Shell Oil. Geoff will be applying his extensive experience to shaping the future of the computing and software systems supported by the Observatory.

P. A. VANDEN BOUT

VLBA

SELECTED ITEMS

Construction Updates - The first five antennas are outfitted and operable to at least some degree (see below). The Pie Town, NM and Kitt Peak, AZ antennas routinely participate in Network observations. Los Alamos participates on a "best effort" basis due to operation budget restrictions. The Fort Davis, TX antenna was declared operable in February, 1990. The North Liberty, IA antenna was declared operable this September. Outfitting of the Owens Valley, CA antenna is underway and scheduled to be completed in October. Antenna erection at the Hancock, NH foundation is underway. At St. Croix, VI and Mauna Kea, HI, site preparation and antenna foundation construction are underway.

VLBA Data Communications Network The communications network planned for data transfer between the VLBA Array Control Computer and control computers of the ten antennas is the NSF supported Internet. NRAO will provide (usually) a local leased line between the antenna site and the nearest available Internet gateway/router, typically but not necessarily a host organization supporting astronomy research. The first such implementation is being hosted by the Los Alamos National Laboratory. The Universities of Iowa, Washington, Texas, Hawaii, plus NOAO, Tucson have offered Internet connectivity for the VLBA antennas in their respective states. Organizations are being or will be solicited for the St. Croix, VI, Owens Valley, CA, and Hancock, NH, sites. Offers and ideas for suggested Internet connectivity economically near VLBA sites are welcome. Contact Ken Stetten at 505-835-7234, or e-mail kstetten@nrao.edu.

Proposals for VLBA projects should be submitted on the same deadlines and to the same place as proposals for VLA projects. Documents describing the status and properties of the VLBA can be obtained from R. J. Havlen at the AOC.

Current VLBA Operational Capabilities

Item Site	PT	KP	LA	FD	NL	OV	BR	HN	SC	MK
20, 6, 4, and 1 cm	A	A	A	A	A	12/90	3/91	9/91	1/92	5/92
Mark II Recorder	A	A	A	A	A	12/90	3/91	np	np	np
VLBA Recorder	A	A	A	A	9/90	12/90	3/91	9/91	1/92	5/92
8 BBC's (Mk III)	A	11/90	12/90							
Dual Frequency S/X	A	A	11/90	3/91						
90/50 cm	A	A	11/90	11/90						
3 cm	A	np	np	np	np	np	np	np	np	np
2 cm	A									
0.7 cm	11/90									
Fully Staffed	A	A	12/90	12/90	10/91	10/91	1/92			

A-currently available; blanks indicate uncertain dates; np-not planned

K. STETTEN, R. C. WALKER

VLA

VLA IAT CLOCK PROBLEM

About the middle of May 1990, the IAT clock at the VLA developed a hardware problem which became noticeably bad around July 13 and was finally identified and fixed on July 26. It is very likely that the problem led to corrupted data which the on-line Modcomp computers did not flag. The exact signature of the corrupted data is unclear. However such data might be recognized by a series of consecutive records that have the same IAT time stamp. Each occurrence may last a minute or more while the Master LO resets itself. The frequency of occurrence may range anywhere from once per hour to as high as a 100 times per hour during the worst periods. The operator's logs may indicate some problems during the very bad periods.

R. C. BIGNELL

VLA CONFIGURATION SCHEDULE

Configuration	Starting Date	Ending Date	Proposal Deadline
CnB	29 Sep 1990	16 Oct 1990	15 Feb 1990
C	19 Oct 1990	28 Jan 1991	15 Jun 1990
DnC	08 Feb 1991	25 Feb 1991	15 Jun 1990
D	01 Mar 1991	27 May 1991	15 Oct 1990
A	21 Jun 1991	16 Sep 1991	15 Feb 1991
BnA	27 Sep 1991	14 Oct 1991	15 Jun 1991
B	18 Oct 1991	30 Dec 1991	15 Jun 1991

The maximum antenna separations for the four VLA configurations are: A-36 km, B-11 km, C-3 km, D-1 km. The BnA, CnB, and DnC configurations are the hybrid configurations with the long north arm, which produce a round beam for southern sources (south of about -15 degree declination).

Approximate Long-Term Schedule

	Q1	Q2	Q3	Q4
1990	A	A	B	C
1991	D	D, A	A	B
1992	C	D	D, A	A
1993	B	C	D	D, A
1994	A	B	C	D

Observers should note that in the ensuing years of sunspot maximum, daytime observations at 327 MHz are unlikely to be successful in the smaller configurations because of solar interference and in the larger configurations because of a disturbed ionosphere. In particular, only the most urgent D configuration observations near 1^h RA should be considered, and A configuration observations near 10^h RA will also be difficult.

B. G. CLARK

USE OF THE SPECTRAL LINE CORRELATOR MODES FOR "CONTINUUM" OBSERVATIONS

The recent implementation of new spectral line correlator modes at the VLA has provided many new avenues of data taking. Although the primary use of these modes will always be for investigations of the spectrum of the radiation, there are many circumstances in which continuum projects will benefit through use of these modes. This note is intended to inform users of these circumstances.

There are two distinct advantages, and two disadvantages, of using the spectral line modes for "continuum imaging." The advantages are: First, the undistorted field of view is greatly enlarged, allowing in most cases, imaging free of chromatic aberration over the entire primary beam. Second, the spectral line modes provide much more accurate correlation products than the continuum mode, resulting in much higher potential dynamic range for point-source dominated objects. Thus, wide field-of-view and high-fidelity observations will generally benefit from use of the spectral line observing modes.

However, the VLA's correlator cannot provide usable spectral information for the full 200 MHz of available IF bandwidth. Effective total bandwidths are always less than 100 MHz, and more typically 30 to 75 MHz, resulting in significant loss of sensitivity compared to the continuum system. Another significant disadvantage is that the off-line computing load will usually be increased. Potential users must carefully consider these opposing characteristics before deciding to use these new modes for "continuum" projects.

This subject will be better explored in a forthcoming VLA Scientific Memorandum. In the meantime, interested users should contact me for further details.

R. A. PERLEY

IMPROVED SPECTRAL LINE CAPABILITIES AT THE VLA

With the software update of May 31, 1990, the VLA on-line system has been enhanced to make available most of the spectral line modes that are supported by the correlator. Because of the greatly increased flexibility offered by the enhancements, it is strongly recommended that observers who intend to use one of the modes contact NRAO staff well in advance of their observing run in order to discuss the preparation of OBSERVE files. Moreover, due to the increased complexity, observers will normally be expected to visit the AOC in Socorro regarding the initial data calibration and reduction.

NRAO staff and several visiting observers have used many of the available modes since the first implementation of the 4-IF modes (on-line software update of February 28, 1990). Although we can only hope to test a reasonable subset of all possible choices of bandwidths, number of channels, etc., it seems as if the on-line system is producing reliable data in all allowed correlator configurations.

OBSERVE: Al Braun has modified the distributed version of OBSERVE to allow all new features. What follows is a summary of all spectral line modes which are currently supported, including some information on OBSERVE:

1. All single IF modes (1A, 1B, 1C, and 1D) should function as before. The change should be transparent in these modes.

2. All 2 IF modes (2AB, 2AC, 2AD, 2BC, 2BD, and 2CD) now function correctly. Until now, modes 2BC and 2BD were not supported. (The modes 2A, 2B, 2C, and 2D are obsolete - they have never been supported by OBSERVE.)

3. The 4 IF mode (4) functions correctly. This allows one spectrum per IF for all baselines. The modes 4A and 4D are obsolete they have never been supported by OBSERVE.

4. The polarization modes (PA and PB) function correctly. These produce four spectra per baseline. The spectra are AA, CC, AC, and CA for mode PA; and BB, DD, BD, and DB for PB. It should be noted that in spectral line mode the round-trip phase correction is not being applied to IFs B and C. The small phase drift is normally calibrated out in the parallel hands but NOT in the cross-hand polarizations. Until the round-trip phase can be applied to IFs B and C as well, a slow apparent rotation of a few degrees per hour of the plane of the polarization should be expected.

5. Multiple subarrays in spectral line mode are supported, but mixed spectral line and continuum subarrays will not be allowed.

6. The individual IFs may now have independent bandwidths. However, correlator firmware imposes a restriction on bandwidth selection when using the multiple IF spectral line modes such that all the IFs must be at 50 MHz, total bandwidth or they must all be less than 50 MHz. In other words, when multiple IFs are specified with different total bandwidths, none of these can be 50 MHz. This restriction holds independently for each subarray.

7. The individual IFs may now have independent data selection criteria.

8. Autocorrelation spectra are produced for all active antennas. The autocorrelation spectra are processed in the same way as the cross-correlation data (i.e., the options for lag spectra, Hanning smoothing, and data selection are applied).

9. Bandpass normalization and Hanning smoothing are available with all spectral line modes. The same options, such as Hanning smoothing or autocorrelation normalization, will be applied to each IF in the multiple IF modes.

10. Channel zero (the "continuum channel") is incorrectly computed in the case of a four-channel spectrum (before Hanning smoothing). This will arise only in the case of correlator modes 4, PA, and PB with a bandwidth of 50 MHz. It is not a problem if a four-channel spectrum is produced as a result of data selection. There are no plans to fix this "feature."

Documentation: More detailed information about these changes are available in the 1990 edition of the Observational Status Report and in the latest issue (version 8.0) of the Guide to Spectral Line Observing by A. Rots. Alternatively contact any of the authors of this document.

AIPS: Data taken in any of the 4-IF modes should be calibrated within AIPS. One of the most critical parts is getting data from the VLA archive tape to disk, using the AIPS program FILLM. The earliest version of AIPS in which FILLM fully supports all VLA spectral line modes will be 15JAN91. It is advised that users who intend to observe in multiple IF spectral line mode obtain this version of AIPS, or use it at one of the NRAO's facilities. ISIS will not be upgraded to incorporate the calibration of 4-IF modes.

E. BRINKS, G. C. HUNT, K. P. SOWINSKI

VLA INFORMATION SYSTEM

The VLA information system which was previously located on the CONVEX computers in Socorro, NM has moved to the new Unix file server, Zia. You can access the system remotely by one of two possible routes: internet or remote dial up using a modem. The internet computer address is zia.aoc.nrao.edu (or 192.43.204.7); you will be prompted for Login on Zia. Dial up access: phone number (505) 835-7010 using a 1200 or 2400 baud modem (8 bit, no parity). In the latter case when you receive the Socorro DDS: prompt type zia to access Zia. At the Login prompt type vlais and a menu of options will be presented.

VLA specific information will be available in the sub-menu VLA whereas VLBA related information is available in two possible menus (VLBA and SUBVLBA). A third major category is titled GEN for general information not specifically related to either VLA or VLBA. It is possible to e-mail yourself some of the information in the system; follow the instructions under MAILIT.

R. C. BIGNELL

VLA COMPUTER STATUS

The Solbourne Unix file and Compute server has now replaced VAX3 for all user accounts including email. Hardware maintenance on VAX3 has been discontinued, and the system will be shutdown on Oct 1, 1990. The plan is to move several disk drives from VAX3 to the microVAX and to attach the line printer to VAX1. Future plans also call for dropping the hardware maintenance on VAX1 at the end of the year but to continue running the VAX1 system for most of 1991. Spare parts from the VAX3 system will be used to maintain the VAX1 system. After 1991, the only VMS computer at the AOC will be the microVAX.

The Unix version of OBSERVE for SUN workstations is now being tested. It is available by logging into the guest account on Zia and on the public SUN 3/60 workstations. This Unix version is identical to the PC program released last June. Future releases of the program using the X Window System are planned. Users desiring a copy of the Unix or PC OBSERVE should contact Theresa McBride at the AOC. Problems or comments concerning the OBSERVE program should be sent to Peggy Perley.

R. R. PAYNE

VLA ARCHIVE AND CALIBRATOR PROGRAM FOR IBM PC

The IBM PC program (and all the necessary data) that will (a) search the VLA archive list for sources observed with the VLA, (b) display information on the VLA proposals, and (c) search the VLA Calibrator List is now available over Internet from our anonymous account. Internet address is zia.aoc.nrao.edu or 192.43.204.7 and log into ftp with some password. Change to the sub-directory pub/vlasors and transfer all the files.

You can still order the program and data on diskette. Contact Wendy Thomas at:

NRAO
P.O. Box O
Socorro, NM 87801
(505) 835-7310

Internet address: wthomas@zia.aoc.nrao.edu and specify diskette size.

R. C. BIGNELL

SUBMISSION OF TELESCOPE PROPOSALS

At each of the VLA proposal deadlines we receive approximately 150 proposals, most of which, as you might imagine, arrive in the week or so prior to the deadline. Since it is a bit of a struggle to deal with the flood of proposals and make sure that the authors of each receive confirmation of the proposal's receipt, that it is recorded, and that it is sent to the proper referees, we rely on our users' cooperation to minimize the burden. In particular, we ask that you follow the instructions on the proposal Cover sheet and mail your proposals to the Director's Office in Charlottesville so that they arrive prior to the deadline. FAXed proposals and proposals inadvertently mailed to the observing sites can all be dealt with, but they needlessly tax our system. With your help we can manage the proposal review process expeditiously.

R. L. BROWN

VLA CELEBRATES TENTH

It may be hard for some of us to imagine, but the VLA is about to officially complete its tenth year of operation. During the decade it has become recognized worldwide for its power, flexibility, and versatility Over 1600 papers reporting data acquired with the VLA have been published in the astronomical literature, and the annual output rate is still increasing. The VLA's impact on the field has been truly revolutionary – far in excess of that envisaged by its designers more than a decade ago.

Now, at the ten-year juncture, it is appropriate that we should pause momentarily, with the advantage of 20-20 hindsight, to reflect on the history of the instrument. On Wednesday, October 10, the VLA's tenth anniversary will be celebrated as part of IAU Colloquium 131 on "Radio Interferometry: Theory, Techniques, and Applications." The day's activities will be appropriately divided between Socorro and the Plains of San Agustín and will include reminiscences by Dave Heeschen, George Swenson, and Jack Lancaster, a site barbecue, and general inspection of the VLA. Friends and supporters of the VLA from the local area and around the State of New Mexico have been invited to help us share in the event, and we hope to hear from U.S. Senator Pete Domenici (NM). The celebration will be a tribute to the VLA, to the persons who brought it into existence, and to those involved with its past, present, and future operation.

R. J. HAVLEN

12 METER TELESCOPE

NEW DEVELOPMENTS

3 mm SIS Receiver- We are pleased to announce the availability of a new 3 mm SIS receiver beginning in early 1991. We are accepting proposals for this receiver now. The next proposal deadline is January 1, for the observing period of April to July.

The new receiver will cover the entire 3 mm window from 68 GHz to 116 GHz. It will replace the existing SIS receiver covering the 90 - 115 GHz band and the Schottky receiver covering the 70 - 90 GHz band. The new receiver has dual orthogonal polarization channels and has receiver noise temperatures -- including all receiver optics -- of 40 - 100 K (SSB). Under typical weather conditions, the effective system temperature, referenced to above the earth's atmosphere and including rear and forward spillover efficiencies, will be 200 - 500 K, depending on frequency. (The system temperature will be higher near 115 GHz owing to the telluric O_2 line.) At some frequencies in the band, the system temperature will be dominated by the atmosphere, not the receiver.

This is the second of our new-generation of SIS receivers. Earlier this year, we announced the availability of a 200 - 250 GHz SIS receiver. These receivers feature cooled optics (lowering the noise temperatures), closed-cycle, 4 K cryostats (reducing maintenance), and computerized tuning (speeding the setup). Within the next few months, we expect to have a 2 mm SIS receiver (see the accompanying article from R. Brown). We will then begin to upgrade the 8-beam, 1.3 mm receiver to SIS junctions, and to make dual-channel, single beam SIS receivers covering the 250 - 300 GHz and 330 - 360 GHz bands. When these receivers are finished, we will call for proposals for them in the NRAO Newsletter or by direct mailing. By Observatory policy, we cannot accept proposals now for any of the new receivers except those that are formally announced.

The SIS receiver development program is a joint effort between Tucson Operations and the Central Development Laboratory in Charlottesville.

New Control System - The new 12 m telescope control system, known as *CACTUS*, will be operational at the beginning of the observing season this autumn. This system is based on the concept of distributed processing, in which most of the peripherals, such as the tracking system, spectrometers, and digital continuum backend, have their own intelligence. These "smart" peripherals are coordinated by a host that has comparatively little work to do. In the first version of *CACTUS*, the host computer is a VAX, although the operator interface is in a SUN Workstation. Motorola MVME-147 computers running under the VxWorks real-time system control the tracking and several of the data acquisition devices. Over the next few months as we are able to replace some hardware components requiring the VAX Unibus, we will phase out the VAX so that the SUN workstation will become the host computer.

We have intentionally restricted the initial release of *CACTUS* to have the same observing capabilities as the FORTH system. The staff designed the new system with flexibility in mind, so we expect to begin adding more observing procedures and other enhancements shortly. Observers need not make any special preparations to use the new system; e.g., *CACTUS* can read source catalogs prepared in the old FORTH format.

D. T. EMERSON, P. R. JEWELL

SUMMER SHUTDOWN NEWS

With work on the new control system and the receiver upgrades, we anticipated a busy summer shutdown. These projects were to have occupied most of the staff for most of the summer. Little did we know! We suffered several unexpected and unrelated setbacks that made this one of the most challenging and exhausting shutdowns we have ever had. During inspection of the dome door drive system, the operations staff found damage to over 50 of the chain rollers on the dome arch beam. In addition, a number of welds that hold the chain down had popped loose. The repair work was most difficult, with the crew working up to 70 feet above the ground. We also suffered two mishaps with cryogenic systems resulting in damage to receivers. In the most serious one, the hybrid cryostat on the old, 3 mm SIS receiver became plugged with ice and the vapor pressure of the liquid helium caused the copper, electro-formed tank to burst. Rather than repair the tank, the receiver group elected to replace the hybrid, liquid helium cryostat with one of the new closed-cycle, 4 K systems. The staff completed this refitting and the receiver is working well. The other mishap occurred when ambient air pressure blew in a teflon window to the evacuated dewar of the 1.3 mm SIS receiver, resulting in damage to radiation shields. The damage has been repaired and the design of the window mount modified to prevent this problem from happening again.

Maybe next summer will be quiet!

P. R. JEWELL

NEW 12 METER MANUALS

We have updated two 12 m documents, the *User's Manual*, and the *Spectral Line Data Analysis Manual*. At this writing (mid-September), both documents are at the printers and are expected back soon. We will mail copies of both documents to department and institute libraries. Individuals may obtain copies by request. (N.B.: Both manuals are over 300 pages long.)

P. R. JEWELL, M. A. GORDON

PROPOSALS FOR λ2 MM OBSERVATIONS

The design of the multiband SIS receiver on the 12 meter telescope anticipates the addition of new frequency bands as the necessary instrumentation is completed. In 1991 we expect to make available to users dual polarization SIS receivers for the λ2 mm band, approximately 130 to 170 GHz. The initial λ2 mm implementation will be a prototype instrument constructed with SIS junctions designed for 230 GHz. The mixers will be upgraded later with a design specific to λ2 mm. Since it is possible that the receiver may be ready for preliminary observations in the spring, and since we would benefit by early experience with the receiver on the telescope, we will try to schedule some proposals in the second trimester next year. The proposal deadline for the second trimester is 1 January 1991. We will accept proposals for the λ2 mm band beginning 15 November 1990 as described below.

- If the receiver is not ready for the spring 1991 observing period the proposals received will be carried over to the fall and considered in competition with proposals received for the fall observing period.
- As with any new piece of equipment, the first users will, by virtue of their being first, be part of the instrument "shakedown" process. Please bear this in mind if you decide to propose for the spring observing period.
- The precise tuning range and receiver temperature achievable are not well established at this time.

PLEASE NOTE: Proposals for the λ2 mm receiver will be accepted on 15 November 1990 and thereafter. No proposals will be accepted or held by the NRAO prior to 15 November. If there are questions about this procedure, please call me.

R. L. BROWN

EDITOR NRAO NEWSLETTER
NATIONAL RADIO ASTRONOMY OBSERVATORY
EDGEMONT ROAD
CHARLOTTESVILLE, VA 22903-2475 USA

NON-PROFIT ORG
U.S. POSTAGE PAID
PERMIT # 373
CHARLOTTESVILLE, VA

**FORWARDING AND RETURN
POSTAGE GUARANTEED,
ADDRESS CORRECTION REQUESTED**

To:

DATED MATERIAL - DO NOT DELAY