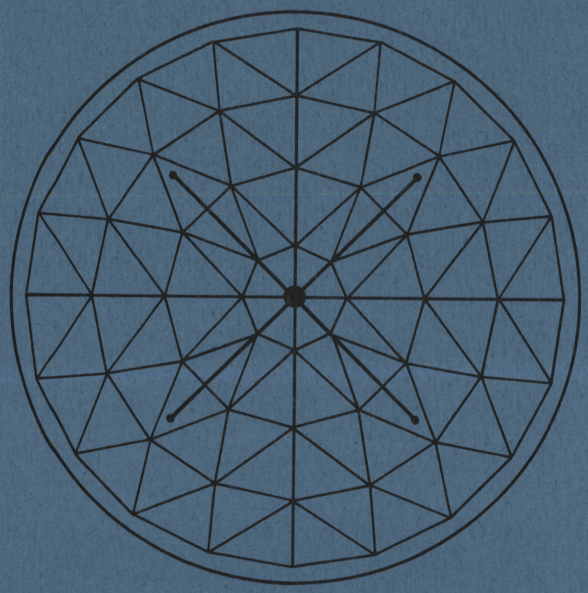

SECTION 5.0

NATIONAL RADIO ASTRONOMY OBSERVATORY
POST OFFICE BOX 2
GREEN BANK, WEST VIRGINIA 24944
TELEPHONE ARBOVALE 456-2011

PROJECT: 300 FT. DIA. HOMOLOGY TELESCOPE

SUBJECT: PINTLE BEARING ARRANGEMENT

5.0 PINTLE BEARING ARRANGEMENT

SECTION		TITLE	PAGE NO.
5.1		PINTLE FOUNDATION AND BEARINGS	2
	5.1.1	FOUNDATION	2
	5.1.2	BEARINGS	3
	5.1.3	CARTRIDGE	4
5.2		HOUSING	5
5.3		WEIGHT SUMMARY	8
5.4		COST ESTIMATE	9

PREPARED BY O. R. Heine APPROVED BY _____ SUBMITTED BY S.D.L.

NATIONAL RADIO ASTRONOMY OBSERVATORY
POST OFFICE BOX 2
GREEN BANK, WEST VIRGINIA 24944
TELEPHONE ARBOVALE 456-2011

PROJECT: 300 FT. DIA. HOMOLOGY TELESCOPE

SUBJECT: PINTLE BEARING ARRANGEMENT

5.1 PINTLE-FOUNDATION AND BEARINGS:

5.1.1 FOUNDATION

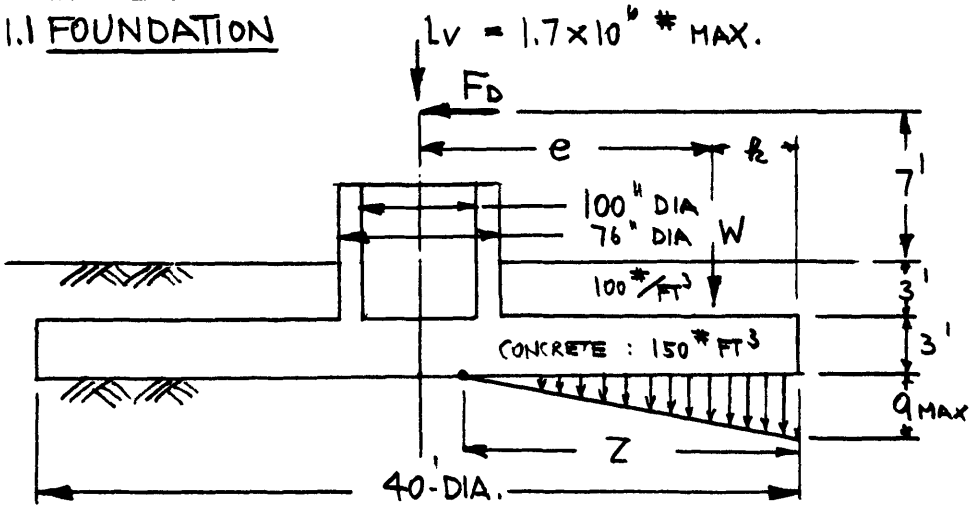

$F_{D\,MAX} = .55 \times 10^6$ LBS (CALCULATED @ DRIVE TO STOW AT 45 MPH WIND)

1.05×10^6 LBS GIVEN BY DR. V. HOERNER USE THIS FIG.

$$M = 1.05 \times 10^6 \times 13 = \underline{13.63 \times 10^6 \text{ FT-LBS}}$$

$$W = \frac{40^2 \pi}{4}\left[\overset{450}{(3 \times 150)} + \overset{300}{(3 \times 100)}\right] = \underline{.94 \times 10^6 \text{ LBS}}$$

$$e = \frac{M}{W} = \frac{13.63 \times \cancel{10^6}}{.94 \times \cancel{10^6}} = \underline{14.5'}$$

$$\frac{e}{R} = \frac{14.5}{20} \cong .73$$

$$\frac{Z}{R} = .64 \quad ; \quad Z = 20 \times .64 = \underline{12.8 \text{ FT}}$$

$$q_{MAX} = 8.95\, q_{AVG.} = 8.95 \frac{.94 \times 10^6}{40^2 \frac{\pi}{4}} = \underline{6{,}650 \text{ LBS/FT}^2} \text{ (OK)}$$

PREPARED BY O.R. HEINE APPROVED BY _____ SUBMITTED BY S.D.L.

NATIONAL RADIO ASTRONOMY OBSERVATORY
POST OFFICE BOX 2
GREEN BANK, WEST VIRGINIA 24944
TELEPHONE ARBOVALE 456-2011

PROJECT: 300 FT. DIA. HOMOLOGY TELESCOPE

SUBJECT: PINTLE BEARING ARRANGEMENT

$$M_{B\,MAX} = We = \underline{13.63 \times 10^6 \text{ FT LBS}}$$

$$Z_{MAX} = \frac{bh^2}{6} = \frac{40 \times 3^2}{6} = \underline{60 \text{ FT}^3}$$

$$S_{B\,MAX} = \frac{13.63 \times 10^6}{12^2 \times 60} \cong \underline{1600 \text{ LBS/IN}^2} \quad (\text{OK})$$

$$M_{B\,HOUSING} = 1.05 \times 10^6 \times 120 = \underline{126 \times 10^6 \text{ IN LBS}}$$

$$Z_{HOUSING} = \frac{\pi}{32}\left(\frac{100^4 - 76^4}{100}\right) = \underline{65 \times 10^3 \text{ IN}^3}$$

$$S_{B\,MAX\ HOUSING} = \frac{126 \times 10^6}{65 \times 10^3} = \underline{1940 \text{ LBS/IN}^2}$$

5.1.2 BEARINGS :

TENTATIVELY SELECTED :

		SKF - 294/500 SPHERICAL ROLLER THRUST BEARING	TORRINGTON - 220 TPS 174 SELFALIGNING CYLINDRICAL ROLLER THRUST BEARING
BORE	:	19.685 IN	22.00 IN
O.D.	:	34.252 "	31.00 "
WIDTH	:	8.819 "	7.50 "
WEIGHT	:	1235 LBS	
BASIC STATIC CAP.	:	3,520,000 LBS	3,330,000 LBS

PREPARED BY O.R. HEINE APPROVED BY _____ SUBMITTED BY S.D.L.

NATIONAL RADIO ASTRONOMY OBSERVATORY
POST OFFICE BOX 2
GREEN BANK, WEST VIRGINIA 24944
TELEPHONE ARBOVALE 456-2011

PROJECT: 300 FT. DIA HOMOLOGY TELESCOPE

SUBJECT: PINTLE BEARING ARRANGEMENT

5.1.3 CARTRIDGE

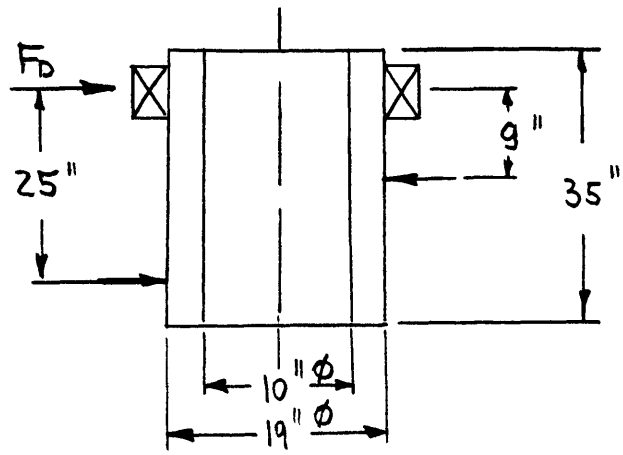

$$Z = \frac{\pi}{32}\left(\frac{19^4 - 10^4}{19}\right) = \frac{\pi}{32}\, 6.3\times10^3 = \underline{618 \text{ IN}^3}$$

$$M_{BMAX} = 1.05\times10^6 \times 9 = \underline{9.5\times10^6 \text{ IN.LBS}}$$

$$S_{BMAX} = \frac{9.5\times10^6}{.618\times10^3} = \underline{15{,}400 \text{ PSI}} \text{ (OK)}$$

$$\text{WEIGHT} \cong \left[\left(\frac{19^2\pi}{4} - \frac{10^2\pi}{4}\right)\right] 35 \times .283 \cong \underline{2100 \text{ LBS}}$$

PREPARED BY O.R. HEINE APPROVED BY _____ SUBMITTED BY S.D.L.

NATIONAL RADIO ASTRONOMY OBSERVATORY
POST OFFICE BOX 2
GREEN BANK, WEST VIRGINIA 24944
TELEPHONE ARBOVALE 456-2011

PROJECT: 300 FT. DIA. HOMOLOGY TELESCOPE

SUBJECT: PINTLE BEARING ARRANGEMENT

5.2. HOUSING

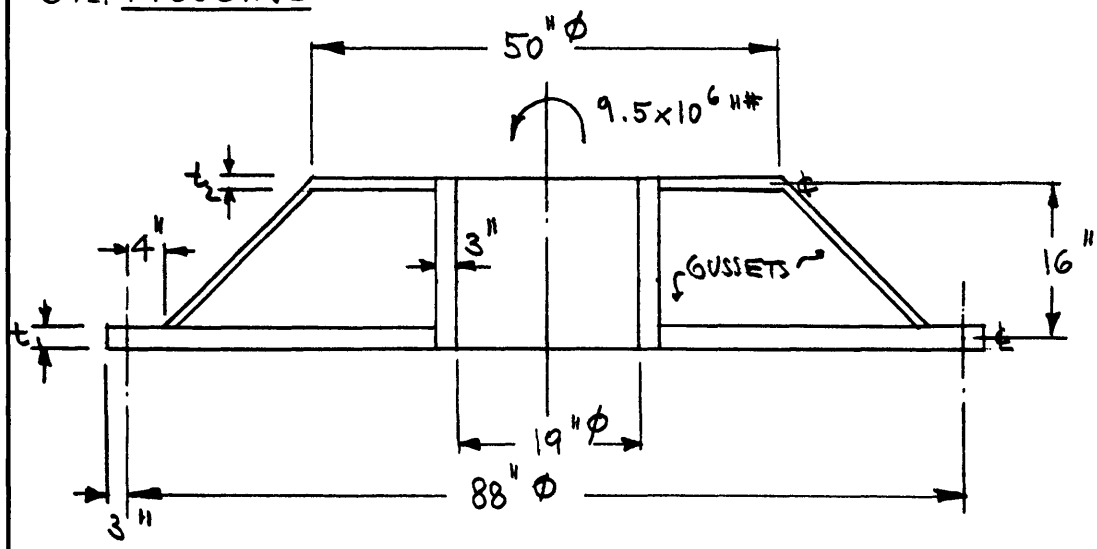

1.) TIE DOWN BOLTS :

$$L_{MAX} = \frac{2M}{Ri}$$

LET $i = 36$ THEN $L = \frac{2 \times 9.5 \times 10^6}{44 \times 36} = \underline{12{,}000 \text{ LBS}}$

SIZE OF BOLT REQD @ 20,000 PSI MAX $\cong$ $\underline{1\frac{1}{4} \text{ IN DIA.}}$

2.) STRESS IN FLANGE :

EFFECTIVE WIDTH $\frac{88\pi}{36} \cong \underline{7.7 \text{ IN}}$

$M_{B\,MAX} = 4 \times 12{,}000 \cong \underline{48{,}000 \text{ IN LBS}}$

PREPARED BY O.R. HENE APPROVED BY _____ SUBMITTED BY S.D.L.

NATIONAL RADIO ASTRONOMY OBSERVATORY
POST OFFICE BOX 2
GREEN BANK, WEST VIRGINIA 24944
TELEPHONE ARBOVALE 456-2011

PROJECT: 300 FT. DIA. HOMOLOGY TELESCOPE

SUBJECT: PINTLE BEARING ARRANGEMENT

LET $S_{B\,MAX} = 20{,}000$ PSI

THEN $Z_{REQD} = \dfrac{48 \times 10^3}{20 \times 10^3} = \underline{2.4 \text{ IN}^3}$

$t_1 = \sqrt{\dfrac{6Z}{b}} = \sqrt{\dfrac{6 \times 2.4}{7.7}} = 1.375$, MAKE $\underline{2.0 \text{ IN}}$

3) <u>APPROX. STRESS IN TOP PLATE</u>

RE: ROARK PAGE 217
CASE 5

MODEL :

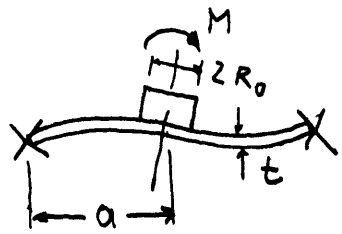

AT $R = R_0$; MAX $S_R = \dfrac{3M}{4\pi t^2 R_0}\left[1 + \left(\dfrac{m+1}{m}\right)\text{LOG}\,\dfrac{2(a-R_0)}{Ka}\right]$

WHERE $m = \dfrac{1}{\nu} = \dfrac{1}{.25} = 4$; $K = \dfrac{.49 \times (44)^2}{(11.5 + .7 \times 44)^2}$

$= \dfrac{945}{1800} = \underline{.525}$

$R_0 = 11.5$ IN , $a = 44$ IN

<u>EQUIVALENT "t"</u> :

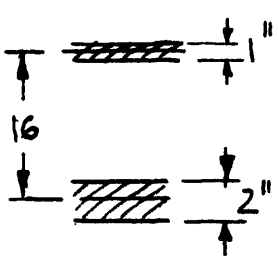

$X = \dfrac{2(1) + 1(17)}{3} = \underline{6.35 \text{ IN}}$

$I \cong \underset{(57)}{2(5.35)^2} + \underset{(113)}{1(10.65)^2} = \underline{170 \text{ IN}^4}$

PREPARED BY O.R. HEINE APPROVED BY _____ SUBMITTED BY S.D.L.

NATIONAL RADIO ASTRONOMY OBSERVATORY
POST OFFICE BOX 2
GREEN BANK, WEST VIRGINIA 24944
TELEPHONE ARBOVALE 456-2011

PROJECT: 300 FT. DIA. HOMOLOGY TELESCOPE

SUBJECT: PINTLE BEARING ARRANGEMENT

$$\frac{t_e^3}{12} = 170 \text{ IN}^4 \quad ; \quad t_e = \sqrt[3]{12 \times 170} = \underline{12.7 \text{ IN}}$$

$$\text{MAX } S_R = \frac{3 \times 9.5 \times 10^6}{4\pi (12.7)^2 11.5} \left[1 + \left(\frac{4+1}{4}\right) \lg \frac{2(44-11.5)}{.525 \times 44} \right]$$

$$= 1230 \left[1 + 1.25 \lg \left(\frac{65}{23.2}\right) \right]$$

$$= 1230 \left[1 + 1.25 (1.03) \right]$$

$$\text{MAX } S_R = 1230 \times 2.3 \cong \underline{2{,}700 \text{ PSI}} \quad \text{(QUITE SAFE)}$$

MAKE $t_e = 6$ IN, THEN

$$\text{MAX } S_R = \frac{2700}{36} \times (12.7)^2 = \underline{12{,}100 \text{ PSI}} \quad \text{(OK)}$$

THEN t_1 REQD $\cong$ 2 IN
t_2 " $\cong$ .5 IN

WEIGHT : (APPROXIM.)

$$V_1 = \left(94^2 \frac{\pi}{4} - 25^2 \frac{\pi}{4}\right) 2 = 11{,}700 \text{ IN}^3$$

$$V_2 = \left(50^2 \frac{\pi}{4} - 25^2 \frac{\pi}{4}\right) .5 = 700 \text{ "}$$

$$V_3 = (65 \pi \times 14.5) .5 = 1500 \text{ "}$$

$$V_4 = 22 \pi \times 3 \times 17.5 = 3700 \text{ "}$$

$$V_5 \cong 12 \times 14 \times 20 \times .25 = 1700 \text{ "}$$

$$\Sigma V = 19{,}300 \text{ IN}^3 \quad W \cong \underline{6000 \text{ LBS}}$$

@ .283

PREPARED BY O.R. HEINE APPROVED BY _____ SUBMITTED BY S.D.L.

NATIONAL RADIO ASTRONOMY OBSERVATORY
POST OFFICE BOX 2
GREEN BANK, WEST VIRGINIA 24944
TELEPHONE ARBOVALE 456-2011

PROJECT: 300 FT. DIA. HOMOLOGY TELESCOPE

SUBJECT: PINTLE BEARING ARRANGEMENT

5.3 WEIGHT SUMMARY (FABRICATED PARTS)

1.	BEARING	:	2500 LBS
2.	KING PIN (CARTRIDGE)	:	2100 "
3.	LOWER HOUSING	:	6000 "
4.	UPPER HOUSING	:	6000 "
5.	SHIMS	:	250 "
6.	FOUNDATION TOP PLATE	:	2500 "
7.	BOLTS & NUTS	:	1000 "
9.	RETAINERS	:	900 "
	TOTAL WEIGHT	:	~ 21,000 LBS SAY 11 TONS

CONCRETE VOLUME OF FOUNDATION : ~150 YD^3

VOLUME OF EXCAVATION : ~300 YD^3

VOLUME OF BACKFILL : ~140 YD^3

A TOTAL OF APPROX 4 TONS IS MOVING WEIGHT.

PREPARED BY O.R. HEINE APPROVED BY _____ SUBMITTED BY S.D.L.

NATIONAL RADIO ASTRONOMY OBSERVATORY
POST OFFICE BOX 2
GREEN BANK, WEST VIRGINIA 24944
TELEPHONE ARBOVALE 456-2011

PROJECT: 300 FT. DIA. HOMOLOGY TELESCOPE

SUBJECT: PINTLE BEARING ARRANGEMENT

5.4 COST ESTIMATE

1. BEARINGS (SKF & TORRINGTON) 2500# @ $4.00	:	$10,000
2. KING PIN, 2100# @ 1.50/#	:	3,100.-
3. LOWER & UPPER HOUSINGS, 12000# @ 1.00/#	:	12,000.-
4. SHIMS & FOUNDATION TOP PLATE 2750# @ .50/#	:	1,400.-
5. BOLTS & NUTS, 1000# @ 1.00/#	:	1,000.-
6. RETAINERS, 900# @ 1.50/#	:	1,500.-
FABRICATED PARTS, SUBTOTAL	:	$ 29,000.-
7. 150 YD^3 CONCRETE FOUNDATION @ 75./YD^3 PLACED	:	11,300.-
8. 300 YD^3 EXCAVATION @ 10./YD^3		3,000.-
9. 140 YD^3 BACKFILL & COMPACTION 10/YD^3		1,400.-
10. 15 TONS REINFORCING STEEL @ 400.-/TON		6,000.-
11. 600 FT^2 OF FORM @ 2.00/FT^2		1,200.-
FOUNDATION & EXCAVATION	:	23,000.-
MISCALL.		3,000.-
TOTAL COST OF PINTLE BEARING AND FOUNDATION SAY		$ 55,000.-
SAY		$ 60,000.-

PREPARED BY O.R. HEINE APPROVED BY _____ SUBMITTED BY S.D.L.