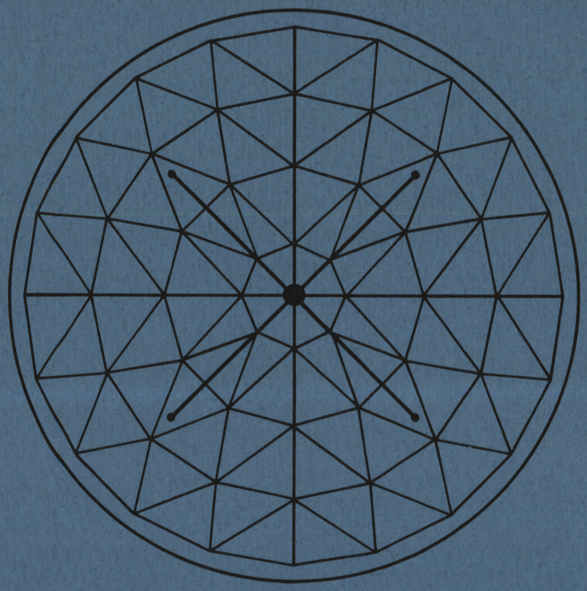

SECTION 7.0

NATIONAL RADIO ASTRONOMY OBSERVATORY
POST OFFICE BOX 2
GREEN BANK, WEST VIRGINIA 24944
TELEPHONE ARBOVALE 456-2011

PROJECT: 300 FT. DIA. HOMOLOGY TELESCOPE

SUBJECT: DYNAMIC ANALYSIS

7.0 DYNAMIC ANALYSIS

SECTION	TITLE	PAGE NO.
7.1	INTRODUCTION	1A
7.2	SUMMARY	2
7.3	INPUT DATA	4
7.4	RESULTS	18
7.5	ANALYSIS OF EQUIVALENT REFLECTOR STIFFNESS	44

PREPARED BY _____ APPROVED BY _____ SUBMITTED BY _____

PRELIMINARY FREE-VIBRATION ANALYSIS OF THE 300 FOOT HOMOLOGY TELESCOPE

7.1 Introduction

This report presents the results of a preliminary study of the free-vibration mode shapes and frequencies of the entire assembly (tower and reflector) of the 300 Foot Homology Telescope. The analyses were accomplished by use of a digital computer structural dynamics program.* Two basic structural models were used: a) a "truss" model, where all mass was concentrated at the joints, and b) a "frame" model, where some mass was concentrated at the midpoint of various members. In both cases, all joints were considered pinned. The truss model had 42 degrees of freedom and the frame model had 76 degrees of freedom. Our interest is in only the first few modes, of course.

All input data are tabulated in Figures 1-4 and in Tables 1-8. A total of 9 runs were made, during which various

* The program is the property of Philco-Ford Corporation, Space and Re-Entry Systems Division, Palo Alto, California.

structural parameters were changed. In all cases, the reflector was modeled as a concentrated mass and inertia, supported on springs representative of its own stiffness (see Appendix).

7.2 SUMMARY

Table 9 tabulates the first six frequencies and several of the more significant relative displacements of the first six modes, for each run. Figures 5 through 28 show further detail of the various mode shapes associated with each of the first six frequencies. The first two frequencies of each run are tabulated in Table 1A, together with a brief description of the significant parameters. Generally it appears that a lowest resonance of one cps can be achieved, with the reflector and the tower contributing about equally to the total response.

RUN	PARAMETER DESCRIPTION	FREQUENCIES (cps) 1st Mode	FREQUENCIES (cps) 2nd Mode	MODE TYPE First Mode	MODE TYPE Second Mode
1	Basic system as described in accompanying tables	0.884	1.12	X Translation, θY Rotation	Y Translation, θX Rotation
1A	Same as No. 1 except "frame" model	0.884	1.12	↓	↓
2	Same as No. 1, except for some member areas increased, azimuth drive stiffness increased	0.930	1.20		
3	Same as No. 2; except for increased foundation stiffness	0.994	1.23		
4	Same as No. 3 except reflector weight and moment of inertia increased	0.905	1.13		
5	Similiar to No. 1A except structural geometry changed, reflector weight and inertia increased, reflector stiffness increased, foundation stiffness increased	1.11	1.49		Member resonance
5A	Same as No. 5 except reflector at horizon	1.08	1.49		Member resonance
6	Same as No. 5 with increased truck weights and reduced foundation stiffness	1.01	1.43		Member resonance
6A	Same as No. 6 except reflector at horizon	0.987	1.43		Member resonance

FIGURE 1A

SUMMARY

NATIONAL RADIO ASTRONOMY OBSERVATORY
POST OFFICE BOX 2
GREEN BANK, WEST VIRGINIA 24944
TELEPHONE ARBOVALE 456-2011

PROJECT: 300 FT. DIA. HOMOLOGY TELESCOPE

SUBJECT: DYNAMIC ANALYSIS

DYNAMIC ANALYSIS

7.3 INPUT DATA

PREPARED BY _____ APPROVED BY _____ SUBMITTED BY _____

NATIONAL RADIO ASTRONOMY OBSERVATORY
POST OFFICE BOX 2
GREEN BANK, WEST VIRGINIA 24944
TELEPHONE ARBOVALE 456-2011

PROJECT: 300 FT. DIA. HOMOLOGY TELESCOPE

SUBJECT: DYNAMIC ANALYSIS

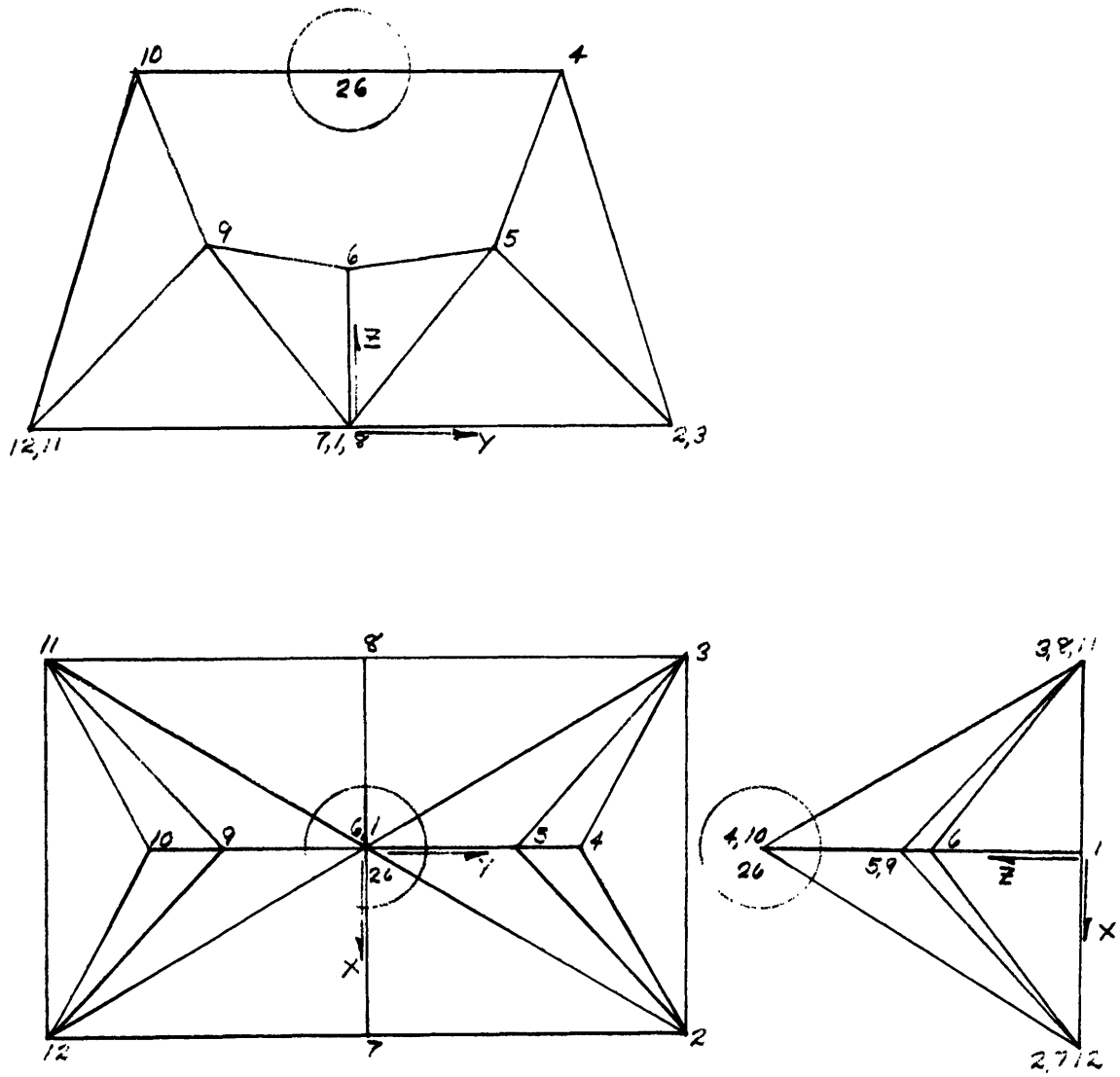

FIGURE 1

JOINT NUMBERS, RUNS 1-4

PREPARED BY _____ APPROVED BY _____ SUBMITTED BY _____

NATIONAL RADIO ASTRONOMY OBSERVATORY
POST OFFICE BOX 2
GREEN BANK, WEST VIRGINIA 24944
TELEPHONE ARBOVALE 456-2011

PROJECT: 300 FT. DIA. HOMOLOGY TELESCOPE

SUBJECT: DYNAMIC ANALYSIS

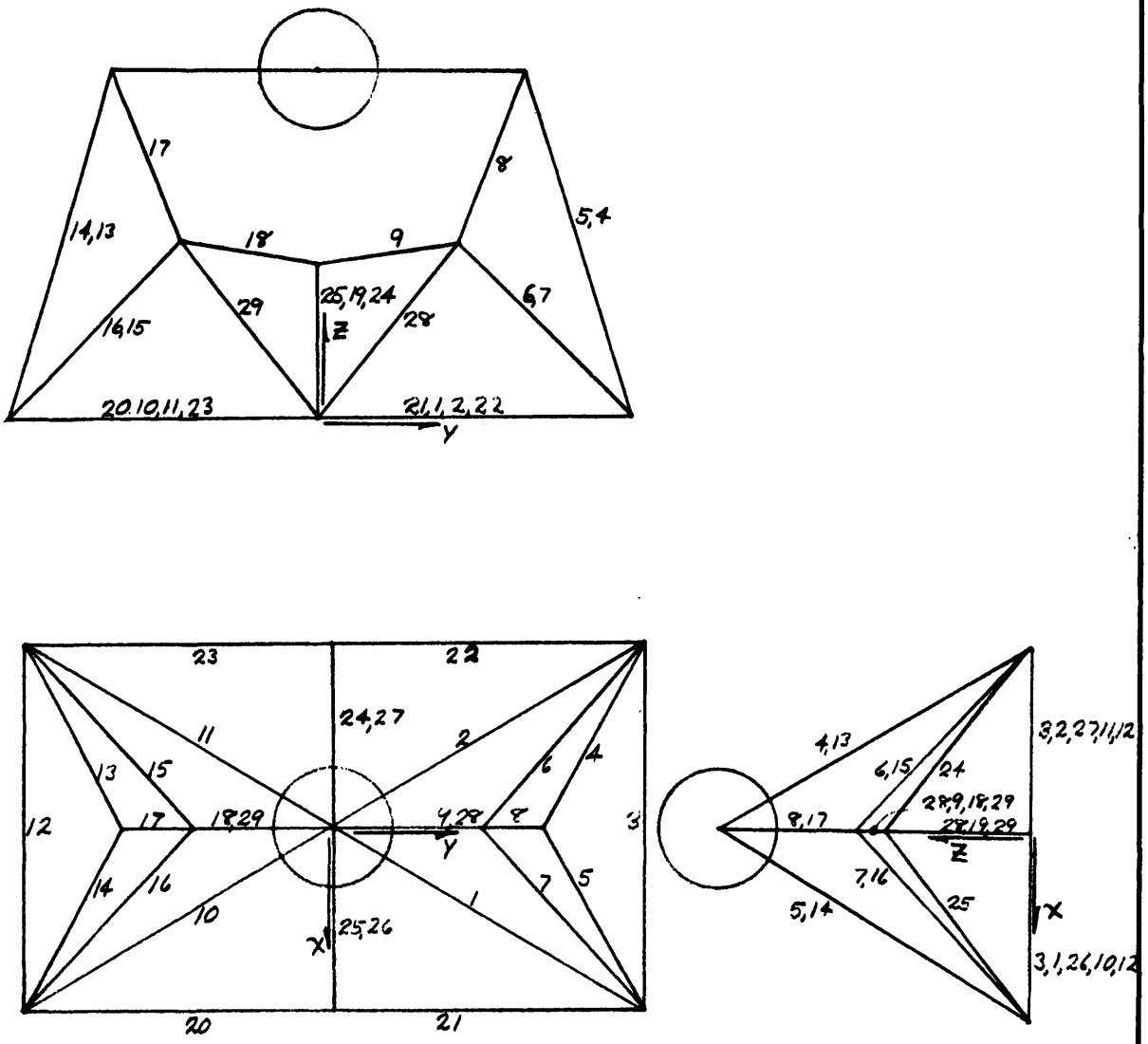

FIGURE 2

MEMBER NUMBERS, RUNS 1-4

PREPARED BY _____ APPROVED BY _____ SUBMITTED BY _____

NATIONAL RADIO ASTRONOMY OBSERVATORY
POST OFFICE BOX 2
GREEN BANK, WEST VIRGINIA 24944
TELEPHONE ARBOVALE 456-2011

PROJECT: 300 FT. DIA. HOMOLOGY TELESCOPE

SUBJECT: DYNAMIC ANALYSIS

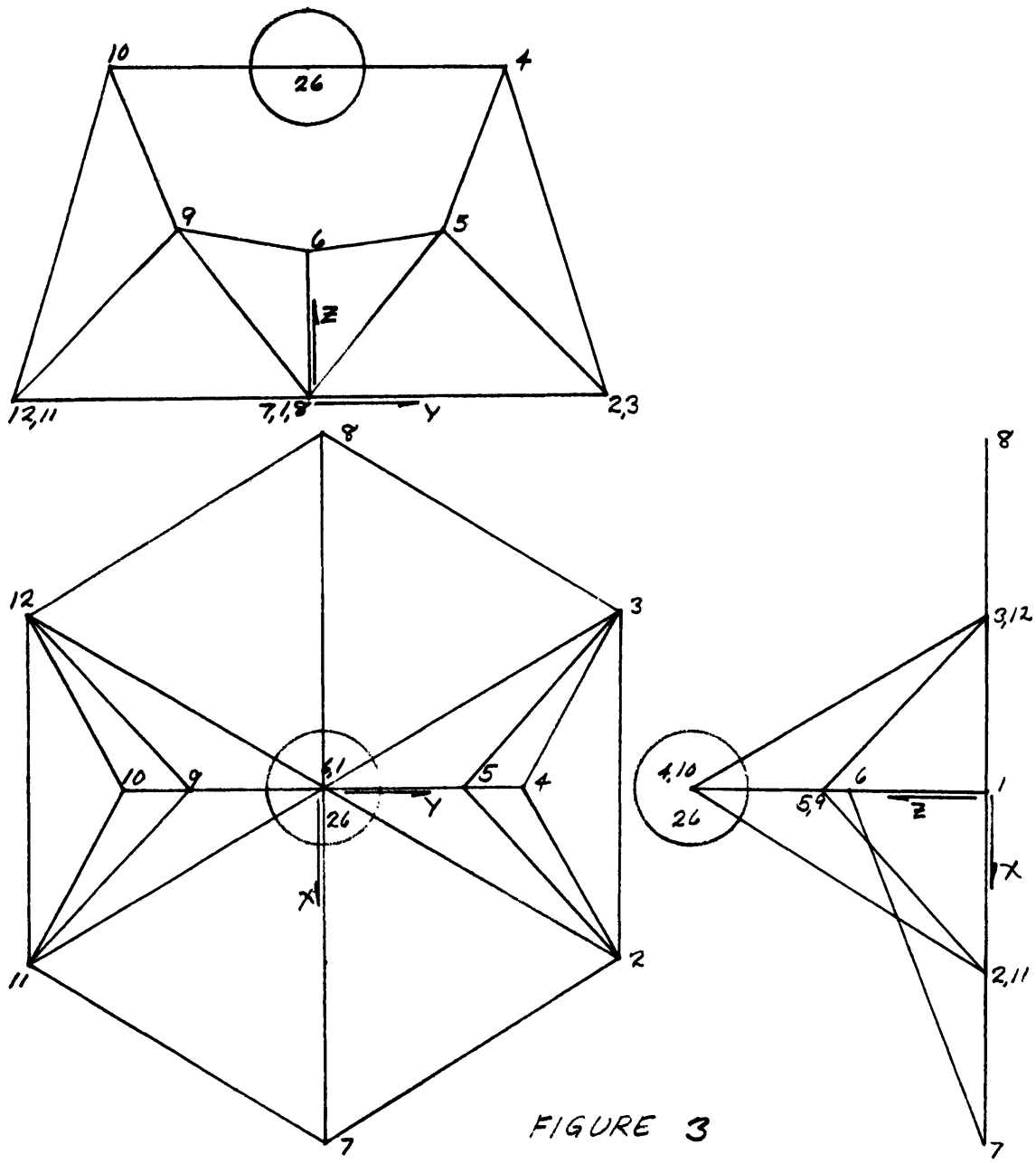

FIGURE 3

JOINT NUMBERS, RUNS 5-6A

PREPARED BY _____ APPROVED BY _____ SUBMITTED BY _____

NATIONAL RADIO ASTRONOMY OBSERVATORY
POST OFFICE BOX 2
GREEN BANK, WEST VIRGINIA 24944
TELEPHONE ARBOVALE 456-2011

PROJECT: 300 FT. DIA. HOMOLOGY TELESCOPE

SUBJECT: DYNAMIC ANALYSIS

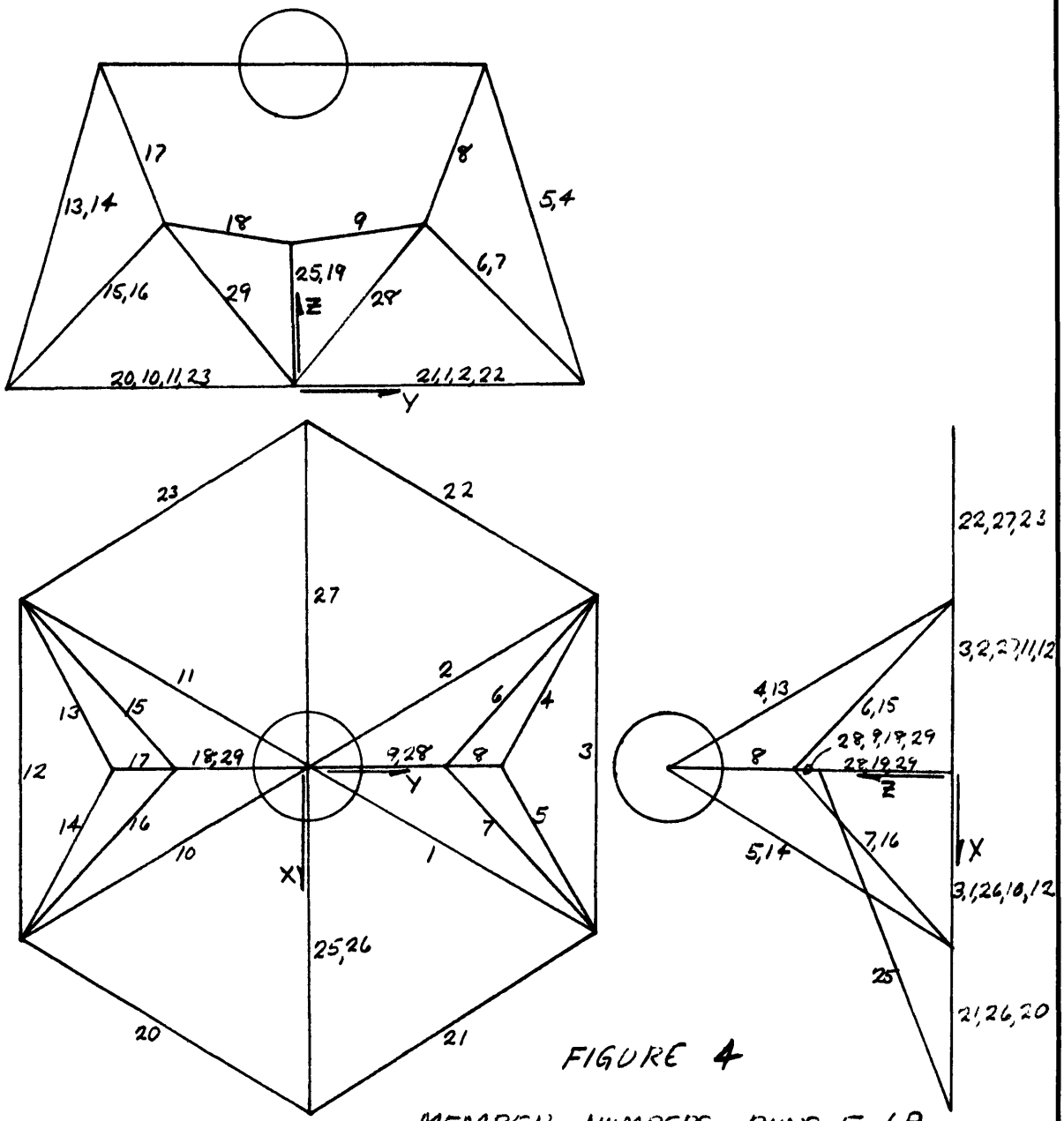

FIGURE 4

MEMBER NUMBERS, RUNS 5-6A

PREPARED BY _____ APPROVED BY _____ SUBMITTED BY _____

NATIONAL RADIO ASTRONOMY OBSERVATORY
POST OFFICE BOX 2
GREEN BANK, WEST VIRGINIA 24944
TELEPHONE ARBOVALE 456-2011

PROJECT: 300 FT. DIA. HOMOLOGY TELESCOPE

SUBJECT: DYNAMIC ANALYSIS

Runs 1, 1A, 2, 3, 4				Runs 5, 5A, 6, 6A			
Joint No.	X	Y	Z	Joint No.	X	Y	Z
1	0	0	0	1	0	0	0
2	1039	1800	0	2	1039	1800	0
3	-1039	1800	0	3	-1039	1800	0
4	0	1200	1896	4	0	1200	1896
5	0	810	904	5	0	650	875
6	0	0	736	6	0	0	736
7	1039	0	0	7	2078	0	0
8	-1039	0	0	8	-2078	0	0
9	0	-810	904	9	0	-650	875
10	0	-1200	1896	10	0	-1200	1896
11	-1039	-1800	0	11	-1039	-1800	0
12	1039	-1800	0	12	1039	-1800	0
26	0	0	1896	26	0	0	1896

TABLE 1
JOINT COORDINATES
(inches)

PREPARED BY _____ APPROVED BY _____ SUBMITTED BY _____

Primary Member Incidences			Length, L (in)			Effective Axial Area, A (in^2)			Effective Density, ρ (lb/in^3)	Weight, $AL\rho$ (lbs)		
Member	Start	End	Runs 1, 1A	Runs 2, 3, 4	Runs 5, 5A 6, 6A	Run 1, 1A	Runs 2, 3, 4	Runs 5, 5A 6, 6A	All Runs	Runs 1, 1A	Runs 2, 3, 4	Runs 5, 5A 6, 6A
1	1	2	2078	2078	2078	75	75	75	0.381	59,389	59,389	59,389
2	1	3	2078	2078	2078	75	75	70	0.381	59,389	59,389	55,420
3	2	3	2078	2078	2078	30	30	30	0.381	23,752	23,752	23,752
4	3	4	2244	2244	2244	130	260	130	0.325	94,798	185,595	94,798
5	2	4	2244	2244	2244	130	260	130	0.325	94,798	185,595	94,798
6	3	5	1696	1696	1780	35	75	35	0.325	19,293	41,343	20,248
7	2	5	1696	1696	1780	35	75	35	0.325	19,293	41,343	20,248
8	4	5	1066	1066	1160	140	300	140	0.325	48,498	103,926	52,780
9	5	6	827	827	665	30	30	30	0.325	8,065	8,066	6,484
10	1	12	2078	2078	2078	75	75	75	0.381	59,389	59,389	59,379
11	1	11	2078	2078	2078	75	75	70	0.381	59,389	59,389	55,420
12	11	12	2078	2078	2078	30	30	30	0.381	23,752	23,752	23,752
13	10	11	2244	2244	2244	130	260	130	0.325	94,797	189,595	94,809
14	10	12	2244	2244	2244	130	260	130	0.325	94,797	189,595	94,809
15	9	11	1696	1696	1780	35	75	35	0.325	19,293	41,343	20,248
16	9	12	1696	1696	1780	35	75	35	0.325	19,293	41,343	20,248
17	9	10	1066	1066	1160	140	300	140	0.325	48,499	103,926	52,780
18	6	9	827	827	665	30	30	30	0.325	8,065	8,066	6,484
19	1	6	736	736	736	30	30	30	0.325	7,176	7,176	7,176
20	7	12	1800	1800	2078	40	40	40	0.381	27,432	27,432	31,669
21	2	7	1800	1800	2078	40	40	40	0.381	27,432	27,432	31,669
22	3	8	1800	1800	2078	40	40	30	0.381	27,432	27,432	23,752
23	8	11	1800	1800	2078	40	40	30	0.381	27,432	27,432	23,752
24	6	8	1273	1273	delete	100	100	delete	0.325	41,381	41,381	DELETE
25	6	7	1273	1273	2204	100	100	100	0.325	41,381	41,381	71,630
26	1	7	1039	1039	2078	75	75	100	0.325	25,326	25,326	67,535
27	1	8	1039	1039	2078	75	75	30	0.325	25,326	25,326	23,752
28	1	5	1214	1214	1090	140	140	140	0.325	55,228	55,228	49,748
29	1	9	1214	1214	1090	140	140	140	0.325	55,228	55,228	49,748
									TOTALS	1,215,332	1,793,569	1,236,289

TABLE 2

MEMBER GEOMETRY AND WEIGHTS

Joint	Run 1 Weight, lbs. Structural	Equipment	Total	Run 1A Weight, lbs. Structural	Equipment	Total	Run 2, 3, 4 Weight, lbs. Structural	Equipment	Total	Run 5, 5A Weight, lbs. Structural	Equipment	Total	Run 6, 6A Weight, lbs. Structural	Equipment	Total
1	202,909	14,000	216,909	167,610	14,000	181,610	202,909	8,000	210,909	117,093	8,000	125,093	117,093	8,000	125,09
2	112,332	200,000	312,332	78,105	200,000	278,105	170,932	90,000	260,932	62,363	90,000	152,363	62,363	430,000	492,36
3	112,332	200,000	312,332	78,105	200,000	278,105	170,932	90,000	260,932	57,874	90,000	147,874	57,874	430,000	487,87
4	119,061	30,000	149,061	47,625	30,000	77,625	242,000	40,000	282,000	48,480	40,000	88,480	48,480	40,000	88,48
5	75,194	——	75,194	30,080	——	30,080	125,000	——	125,000	46,772	——	46,772	46,772	——	46,77
6	53,024	100,000	153,024	21,212	100,000	121,212	53,024	92,000	145,024	24,398	92,000	116,398	24,398	92,000	116,39
7	60,782	200,000	260,782	48,373	200,000	248,373	60,782	90,000	150,782	59,503	90,000	149,503	59,503	160,000	219,50
8	60,782	200,000	260,782	48,373	200,000	248,373	60,782	90,000	150,782	28,502	45,000	73,502	28,502	80,000	108,50
9	75,194	——	75,194	30,080	——	30,080	125,000	——	125,000	46,772	——	46,772	46,772	——	46,77
10	119,061	30,000	149,061	47,625	30,000	77,625	242,000	40,000	282,000	48,480	40,000	88,480	48,480	40,000	88,48
11	112,332	200,000	312,332	78,105	200,000	278,105	170,932	90,000	260,932	57,874	90,000	147,874	57,874	430,000	487,87
12	112,332	200,000	312,332	78,105	200,000	278,105	170,932	90,000	260,932	62,363	90,000	152,373	62,363	430,000	492,36
TOTALS	1,215,335	1,374,000	2,589,335	753,367	1,374,000	2,127,367	1,795,225	720,000	2,515,225	660,474	675,000	1,335,474	660,474	2,140,000	2,800,47
				wgts lumped @ center span		461,968						574,826			574,82
				total weight		2,589,335						1,910,300			3,375,30

TABLE 3

LUMPED WEIGHTS AT JOINTS

(LBS.)

K MOM W.R. S.D.L.

NATIONAL RADIO ASTRONOMY OBSERVATORY
POST OFFICE BOX 2
GREEN BANK, WEST VIRGINIA 24944
TELEPHONE ARBOVALE 456-2011

PROJECT: 300 FT. DIA. HOMOLOGY TELESCOPE

SUBJECT: DYNAMIC ANALYSIS

Member No.	Run 1	Run 1A	Runs 2, 3, 4	Runs 5, 5A, 6, 6A
1	Truss Analysis	0	Truss Analysis	35,600
2		0		33,200
3		0		0
4		56,886		56,886
5		56,886		56,886
6		11,576		12,149
7		11,576		12,149
8		29,102		31,668
9		4,838		0
10		0		35,600
11		0		33,200
12		0		0
13		56,886		56,886
14		56,886		56,886
15		11,576		12,149
16		11,576		12,149
17		29,102		31,668
18		4,838		0
19		4,306		0
20		0		0
21		0		0
22		0		0
23		0		0
24		24,824		delete
25		24,824		42,978
26		0		40,521
27		0		14,251
28		33,143		0
29		33,143		0

TABLE 4

WEIGHTS LUMPED AT CENTER SPAN

FOR "FRAME" ANALYSES (lbs)

PREPARED BY _____ APPROVED BY _____ SUBMITTED BY _____

PROJECT: 300 FT. DIA. HOMOLOGY TELESCOPE

SUBJECT: DYNAMIC ANALYSIS

Joint	Source of Equipment Weight
1	Pintle bearing mechanism
2	Truck assembly and azimuth gear and gear boxes
3	Truck assembly and azimuth gears and gear boxes
4	Elevation bearings and shafts
5	No equipment
6	Elevation drive mechanism
7	Truck assembly and azimuth gears and gear boxes
8	Truck assembly and aximuth gears and gear boxes
9	No equipment
10	Elevation bearings and shafts
11	Truck assembly and azimuth gears and gear boxes
12	Truck assembly and azimuth gears and gear boxes

TABLE 5

SOURCE OF EQUIPMENT WEIGHTS

PREPARED BY _____ APPROVED BY _____ SUBMITTED BY _____

NATIONAL RADIO ASTRONOMY OBSERVATORY
POST OFFICE BOX 2
GREEN BANK, WEST VIRGINIA 24944
TELEPHONE ARBOVALE 456-2011

PROJECT: 300 FT. DIA. HOMOLOGY TELESCOPE

SUBJECT: DYNAMIC ANALYSIS

Tower Wts:	Run 1	Run 1A	Run 2	Run 3	Run 4	Run 5	Run 5A	Run 6	Run 6A
Structural Weight ($lbs \times 10^6$)	1.215	1.215	1.794	1.794	1.794	1.236	1.236	1.236	1.236
Equipment Weight ($lbs \times 10^6$)	1.374	1.374	0.720	0.720	0.720	0.675	0.675	2.140	2.140
Total Weight ($lbs \times 10^6$)	2.589	2.589	2.515	2.515	2.515	1.910	1.910	3.375	3.375
Reflector Properties:									
Weight ($lbs \times 10^6$)	2.224	2.224	2.224	2.224	2.660	2.560	2.560	2.560	2.560
I_X ($lb\text{-}in\text{-}sec^2$) ($\times 10^8$)	36.24	36.24	36.24	36.24	44.40	42.72	57.72	42.72	57.72
I_Y ($lb\text{-}in\text{-}sec^2$) ($\times 10^8$)	36.24	36.24	36.24	36.24	44.40	42.72	42.72	42.72	42.72
I_Z ($lb\text{-}in\text{-}sec^2$) ($\times 10^8$)	48.70	48.70	48.70	48.70	60.00	57.72	42.72	57.72	42.72

TABLE 6

TOWER WEIGHTS AND REFLECTOR PROPERTIES

PREPARED BY _____ APPROVED BY _____ SUBMITTED BY _____

Joint	Run 1, 1A	Run 2	Run 3, 4	Run 5, 5A	Run 6, 6A
1	X:2.0×10^7 Y:2.0×10^7 Z:zero	X:2.0×10^7 Y:2.0×10^7 Z:zero	X:2.0×10^7 Y:2.0×10^7 Z:zero	X:2.0×10^7 Y:2.0×10^7 Z:1.0×10^7	X:2.0×10^7 Y:2.0×10^7 Z:1.0×10^7
2	*a:7.0×10^5 **b:zero Z:1.8×10^6	a:10.0×10^5 b:zero Z:1.8×10^6	a:10.0×10^5 b:zero Z:10.0×10^6	a:10.0×10^5 b:zero Z:10.0×10^6	a:7.0×10^5 b:zero Z:1.8×10^6
3	a:7.0×10^5 b:zero Z:1.8×10^6	a:10.0×10^5 b:zero Z:1.8×10^6	a:10.0×10^5 b:zero Z:10.0×10^6	a:10.0×10^5 b:zero Z:10.0×10^6	a:7.0×10^5 b:zero Z:1.8×10^6
4	X:2.48×10^5 Y:2.48×10^5 Z:2.48×10^5	X:2.48×10^5 Y:2.48×10^5 Z:2.48×10^5	X:2.48×10^5 Y:2.48×10^5 Z:2.48×10^5	X:11.58×10^5 Y:7.04×10^5 Z:8.85×10^5	X:11.58×10^5 Y:7.04×10^5 Z:8.85×10^5
6	X:5.96×10^5 Y:zero Z:zero	X:5.96×10^5 Y:zero Z:zero	X:5.96×10^5 Y:zero Z:zero	X:5.8×10^5 Y:zero Z:zero	X:5.8×10^5 Y:zero Z:zero
7	X:zero Y:zero Z:1.8×10^6	X:zero Y:zero Z:1.8×10^6	X:zero Y:zero Z:10.0×10^6	X:zero Y:zero Z:10.0×10^6	X:zero Y:zero Z:1.8×10^6
8	X:zero Y:zero Z:1.8×10^6	X:zero Y:zero Z:1.8×10^6	X:zero Y:zero Z:10.0×10^6	X:zero Y:zero Z:5.0×10^6	X:zero Y:zero Z:0.9×10^6
10	X:2.48×10^5 Y:2.48×10^5 Z:2.48×10^5	X:2.48×10^5 Y:2.48×10^5 Z:2.48×10^5	X:2.48×10^5 Y:2.48×10^5 Z:2.48×10^5	X:11.58×10^5 Y:7.04×10^5 Z:8.85×10^5	X:11.58×10^5 Y:7.04×10^5 Z:8.85×10^5

TABLE 7

CONCENTRATED STIFFNESSES (lb/in)

(continued next page)

* Axis "a", parallel to track
** Axis "b", perpendicular to track

NATIONAL RADIO ASTRONOMY OBSERVATORY
POST OFFICE BOX 2
GREEN BANK, WEST VIRGINIA 24944
TELEPHONE ARBOVALE 456-2011

PROJECT: 300 FT. DIA. HOMOLOGY TELESCOPE

SUBJECT: DYNAMIC ANALYSIS

TABLE 7

CONCENTRATED STIFFNESSES (lbs/in)

Joint	Run 1, 1A	Run 2	Run 3, 4	Run 5, 5A	Run 6, 6A
11	a:7.0×10^5 b:zero z:1.8×10^6	a:10.0×10^5 b:zero z:1.8×10^6	a:10.0×10^5 b:zero z:10.0×10^6	a:10.0×10^5 b:zero z:10.0×10^6	a:7.0×10^5 b:zero z:1.8×10^6
12	a:7.0×10^5 b:zero z:1.8×10^6	a:10.0×10^5 b:zero z:1.8×10^6	a:10.0×10^5 b:zero z:10.0×10^6	a:10.0×10^5 b:zero z:10.0×10^6	a:7.0×10^5 b:zero z:1.8×10^6

PREPARED BY _____ APPROVED BY _____ SUBMITTED BY _____

Joint	Source of Concentrated Stiffness
1	Pintle bearing assembly
2	Aximuth drive parallel to track; truck assembly and foundation vertically
3	Aximuth drive parallel to track; truck assembly and foundation vertically
4	Reflector structure and elevation bearings and shaft
5	No concentrated stiffness
6	Reflector structure and elevation drive
7	Aximuth drive parallel to track; truck assembly and foundation vertically
8	Azimuth drive parallel to track; truck assembly and foundation vertically
9	No concentrated stiffness
10	Reflector structure and elevation bearings and shaft
11	Azimuth drive parallel to track; truck assembly and foundation vertically
12	Azimuth drive parallel to track; truck assembly and foundation vertically

TABLE 8

SOURCE OF CONCENTRATED STIFFNESSES

DYNAMIC ANALYSIS

7.4 RESULTS

RUN	1	1A	2	3	4	5	5A	6	6A
FIRST MODE:									
Frequency (cps)	0.884	0.884	0.930	0.994	0.905	1.11	1.08	1.01	0.987
Joint 26X*	1.000	1.000	1.000	1.000	1.000	1.000	1.000	1.000	1.000
Joint 4X	0.434	0.433	0.367	0.271	0.269	0.727	0.668	0.790	0.741
Joint 26, $\theta Y (10^{-3})$**	1.07	1.07	1.10	1.13	1.13	1.76	1.67	1.50	1.46
SECOND MODE:									
Frequency (cps)	1.12	1.12	1.20	1.23	1.13	1.49	1.49	1.43	1.43
Joint 26Y	1.000	1.000	1.000	1.000	1.000				
Joint 4Y	0.423	0.421	0.337	0.304	0.301				
Joint 5Z	0.0842	0.0828	0.0552	0.0803	0.0797				
Member 4						0.989	0.991	0.978	0.986
Member 5						1.000	1.000	1.000	1.000
THIRD MODE:									
Frequency (cps)	1.35	1.35	1.36	1.39	1.28	1.58	1.59	1.54	1.57
Joint 26Z	1.000	1.000	1.000	1.000	1.000				
Joint 4Z	0.169	0.169	1.147	0.110	0.108				
Joint 5Z	0.191	0.190	0.178	0.144	0.141				
Member 4						-0.984	-0.983	-0.993	-0.991
Member 5						1.000	1.000	1.000	1.000
FOURTH MODE:									
Frequency (cps)	1.42	1.42	1.49	1.61	1.46	1.60	1.60	1.60	1.60
Joint 4X	1.000	1.000	1.000	1.000	1.000				
Joint 26 $\theta Z (x10^{-3})$	-1.82	-1.81	-2.06	-2.76	-2.83				
Joint 2X	0.219	0.219	0.226	0.350	0.341				
Joint 2Y	0.0693	0.0665	0.125	0.194	0.186				
Joint 2Z	-0.172	-0.170	-0.228	-0.0622	-0.0608				
Member 4						1.000	1.000	1.000	1.000
Member 5						-0.975	-0.975	-0.999	-0.995
FIFTH MODE:									
Frequency (cps)	2.10	1.83	2.12	2.15	1.95	1.62	1.61	1.60	1.60
Joint 5Z	0.992		1.000	1.000	1.000				
Joint 5Y	-0.735		-0.645	-0.591	-0.576				
Joint 4Z	1.000		0.958	0.887	0.895				
Joint 4Y	-0.0892		-0.150	-0.141	0.142				
Joint 26, $\theta X (x10^{-3})$	6.99		8.26	10.5	10.8				
Member 4		1.000				1.000	1.000	0.958	0.968
Member 5		1.000				0.987	0.983	1.000	1.000
SIXTH MODE									
Frequency (cps)	2.41	1.83	2.42	2.51	2.29	1.62	1.62	1.61	1.61
Joint 26X	1.000		1.000	1.000	1.000				
Joint 4X	0.567		0.548	0.391	0.365				
Joint 26, $\theta Y (x10^{-3})$	-1.54		01.53	-1.45	-1.40				
Member 4		1.000						0.958	0.961
Member 5						1.000	1.000	1.000	1.000

TABLE 9

NATURAL FREQUENCIES AND MODE SHAPES

* The direction of the tabulated joint translation is indicated by the coordinate direction (X, Y or Z).

** The rotational axis of the tabulated reflector rotation is indicated by θX, θY, or θZ.

NATIONAL RADIO ASTRONOMY OBSERVATORY
POST OFFICE BOX 2
GREEN BANK, WEST VIRGINIA 24944
TELEPHONE ARBOVALE 456-2011

PROJECT: 300 FT. DIA. HOMOLOGY TELESCOPE

SUBJECT: DYNAMIC ANALYSIS

300 FT HOMOLOGY TELESCOPE
MOUNT DYNAMICS
RUN 5

JOINTS:
26X: 1.000
26θY: 0.00176
4X: 0.727 UNSY

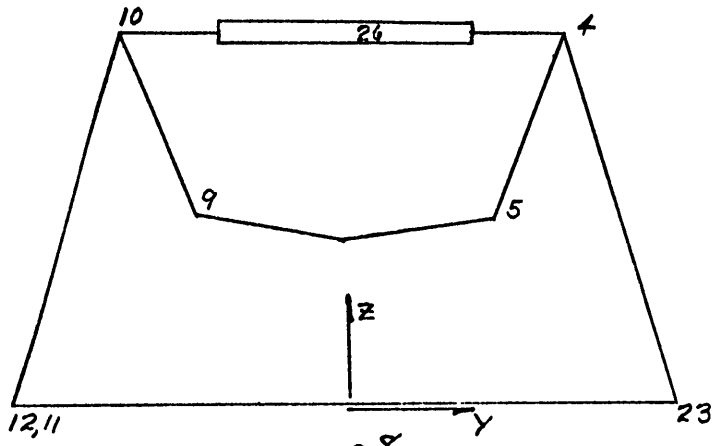

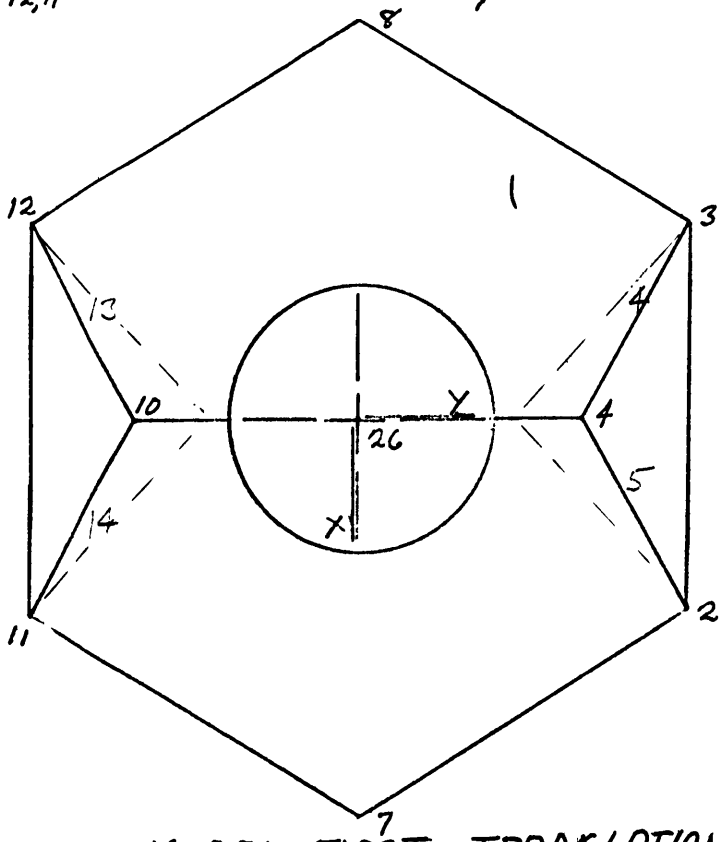

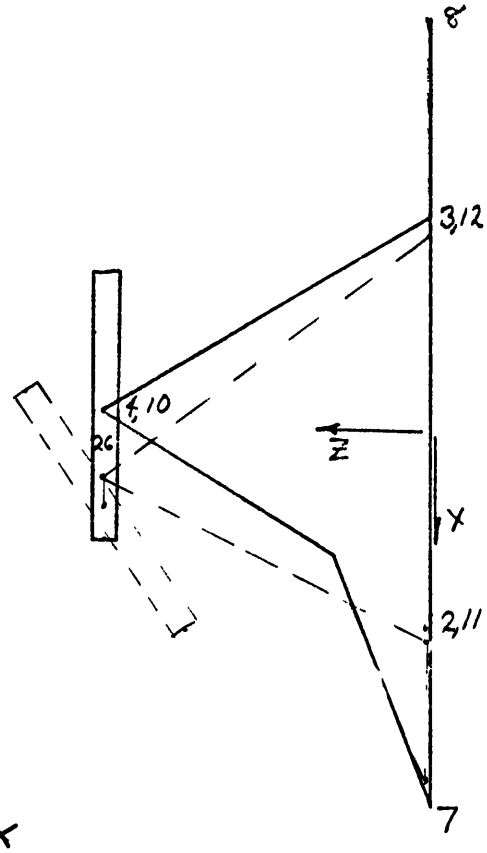

MODE: FIRST; TRANSLATIONAL-X

FREQUENCY: 1.11 CPS

FIGURE -5-

PREPARED BY _____ APPROVED BY _____ SUBMITTED BY _____

NATIONAL RADIO ASTRONOMY OBSERVATORY
POST OFFICE BOX 2
GREEN BANK, WEST VIRGINIA 24944
TELEPHONE ARBOVALE 456-2011

PROJECT: 300 FT. DIA. HOMOLOGY TELESCOPE

SUBJECT: DYNAMIC ANALYSIS

300 FT HOMOLOGY TELESCOPE
MOUNT DYNAMICS
RUN 5

MEMBERS: 5 : +1.000
4 : +0.989

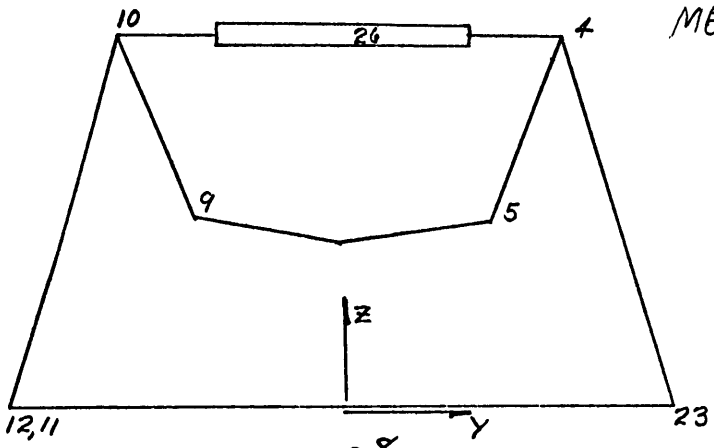

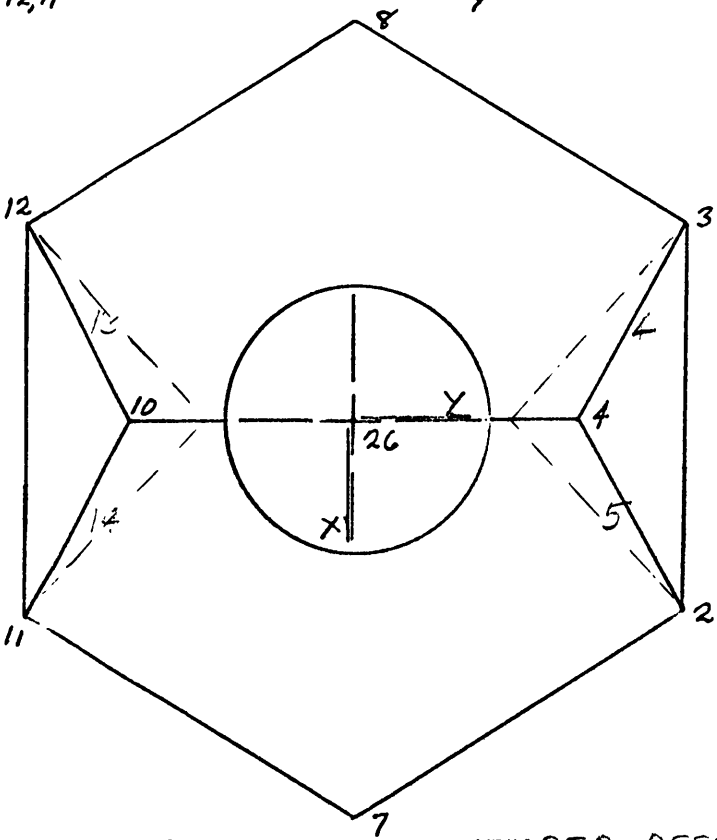

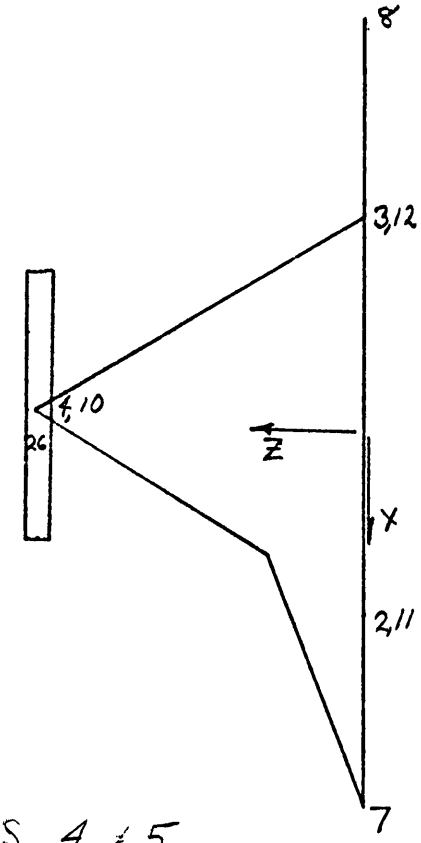

MODE: SECOND MEMBER RESONANCES, 4 & 5

FREQUENCY: 1.49 CPS

FIGURE - 6 -

PREPARED BY _____ APPROVED BY _____ SUBMITTED BY _____

NATIONAL RADIO ASTRONOMY OBSERVATORY
POST OFFICE BOX 2
GREEN BANK, WEST VIRGINIA 24944
TELEPHONE ARBOVALE 456-2011

PROJECT: 300 FT. DIA. HOMOLOGY TELESCOPE

SUBJECT: DYNAMIC ANALYSIS

300 FT HOMOLOGY TELESCOPE
MOUNT DYNAMICS
RUN 5

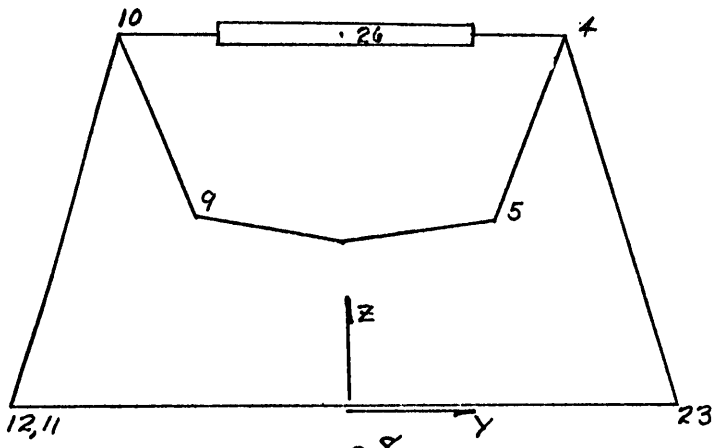

MEMBERS: 5: 1.000
4: -0.984

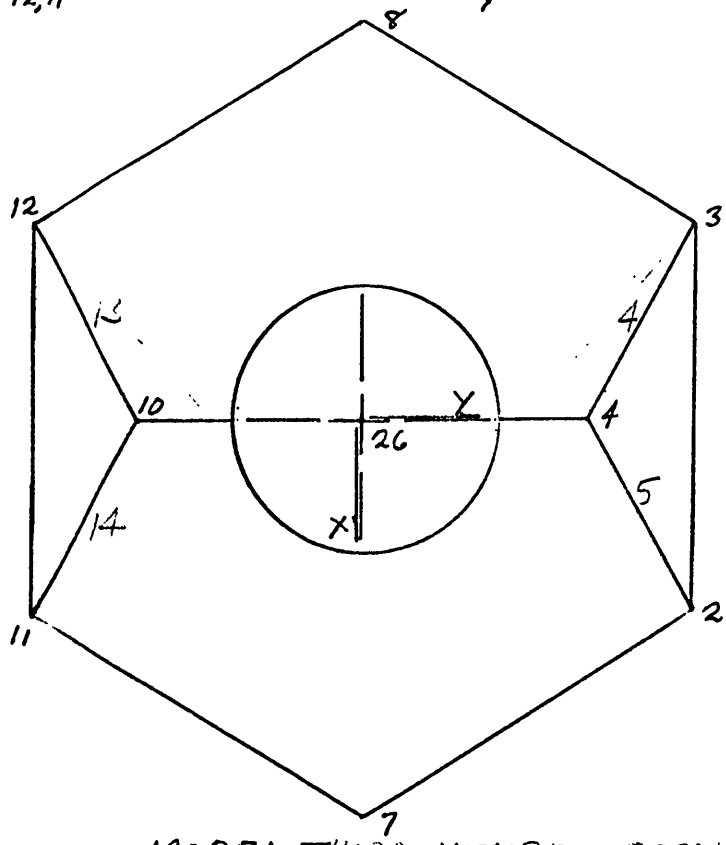

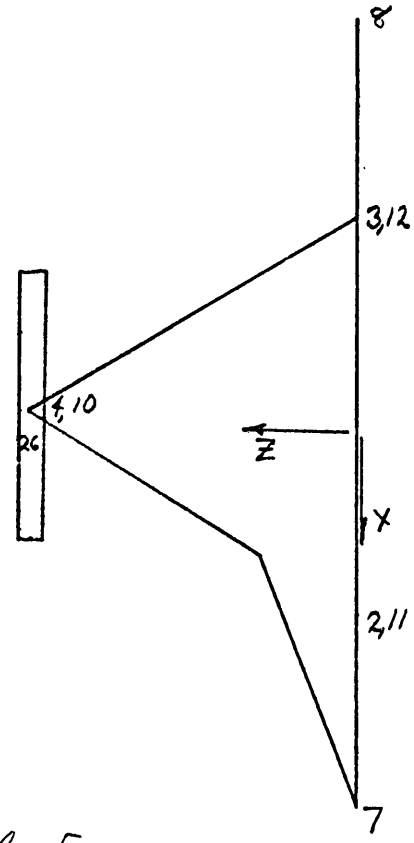

MODE: THIRD, MEMBER RESONANCES, 4 5

FREQUENCY: 1.58 CPS

FIGURE -7-

PREPARED BY _____ APPROVED BY _____ SUBMITTED BY _____

NATIONAL RADIO ASTRONOMY OBSERVATORY
POST OFFICE BOX 2
GREEN BANK, WEST VIRGINIA 24944
TELEPHONE ARBOVALE 456-2011

PROJECT: 300 FT. DIA. HOMOLOGY TELESCOPE

SUBJECT: DYNAMIC ANALYSIS

300 FT HOMOLOGY TELESCOPE
MOUNT DYNAMICS
RUN 5

MEMBER: 4; 1.000
5; -0.975

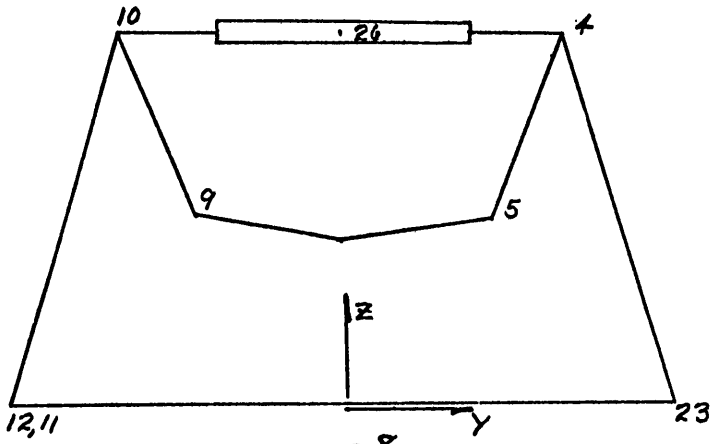

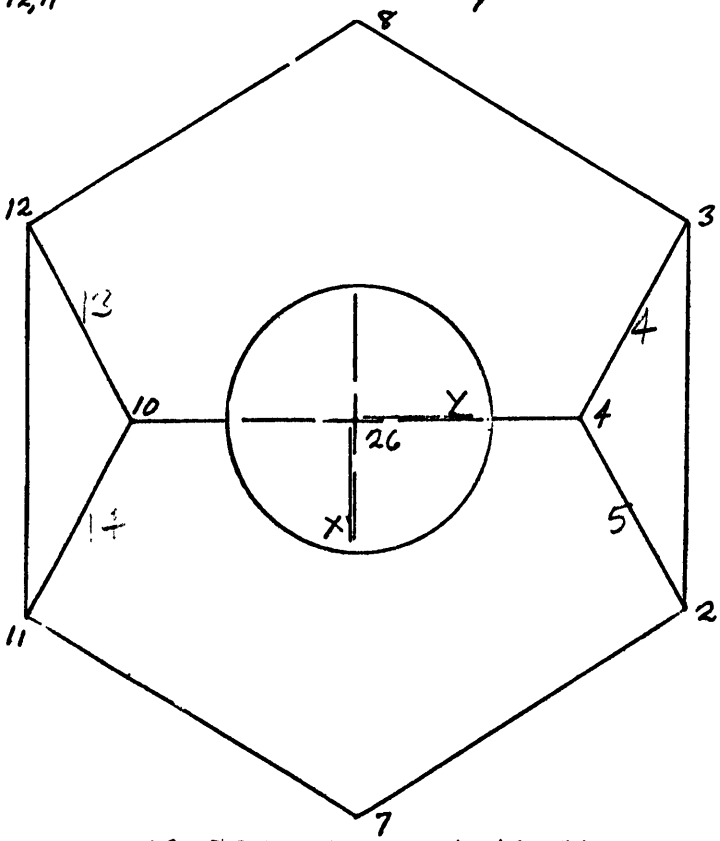

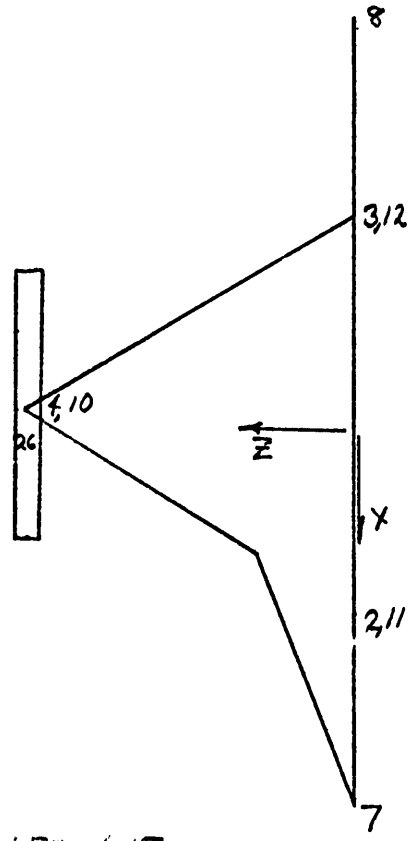

MODE: FOURTH, MEMBER RESONANCES: 4, 5
FREQUENCY: 1.60 CPS

FIGURE -8-

PREPARED BY _____ APPROVED BY _____ SUBMITTED BY _____

NATIONAL RADIO ASTRONOMY OBSERVATORY
POST OFFICE BOX 2
GREEN BANK, WEST VIRGINIA 24944
TELEPHONE ARBOVALE 456-2011

PROJECT: 300 FT. DIA. HOMOLOGY TELESCOPE

SUBJECT: DYNAMIC ANALYSIS

300 FT HOMOLOGY TELESCOPE
MOUNT DYNAMICS
RUN 5

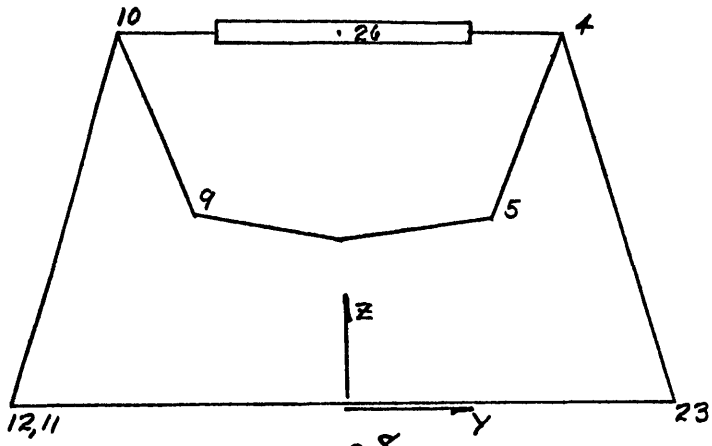

MEMBERS: 4: 1.000
5: 0.987

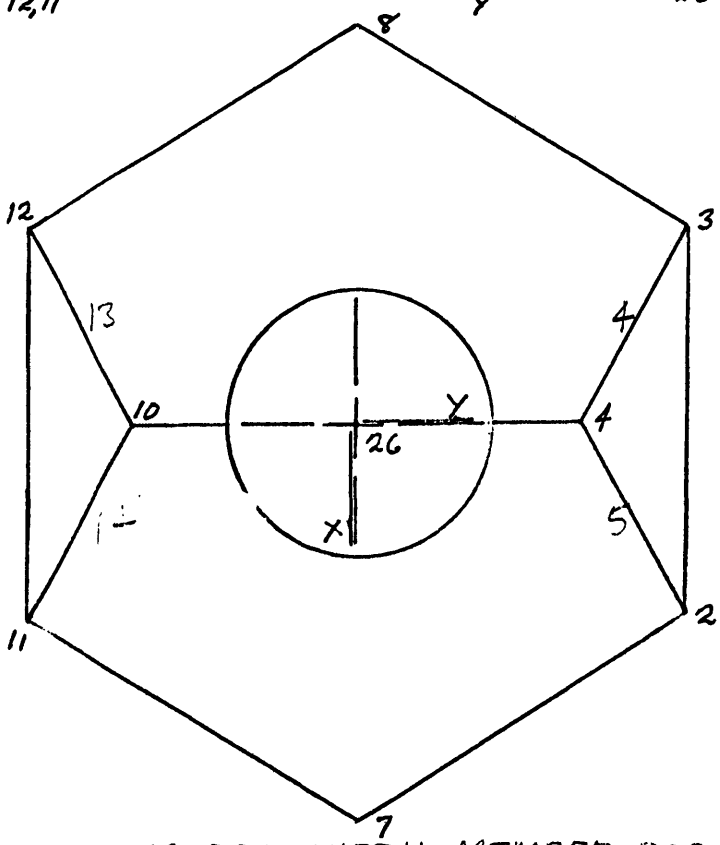

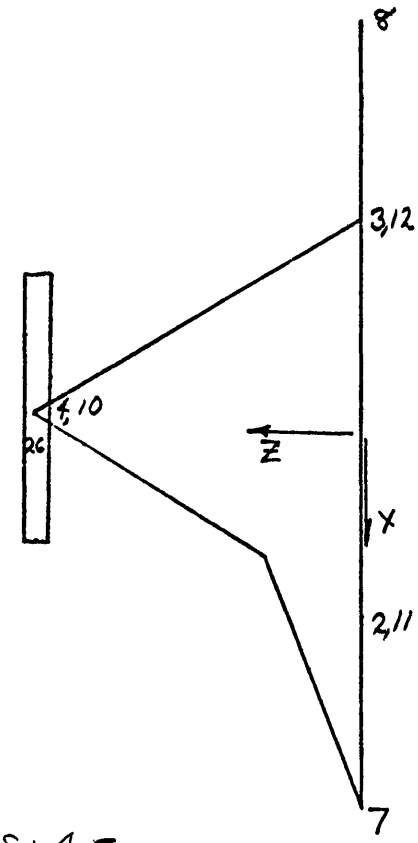

MODE: FIFTH, MEMBER RESONANCES: 4 5

FREQUENCY: 1.62 CPS

FIGURE - 9 -

PREPARED BY _____ APPROVED BY _____ SUBMITTED BY _____

NATIONAL RADIO ASTRONOMY OBSERVATORY
POST OFFICE BOX 2
GREEN BANK, WEST VIRGINIA 24944
TELEPHONE ARBOVALE 456-2011

PROJECT: 300. FT. DIA. HOMOLOGY TELESCOPE

SUBJECT: DYNAMIC ANALYSIS

300 FT HOMOLOGY TELESCOPE
MOUNT DYNAMICS
RUN 5

MEMBER: 5; 1.000

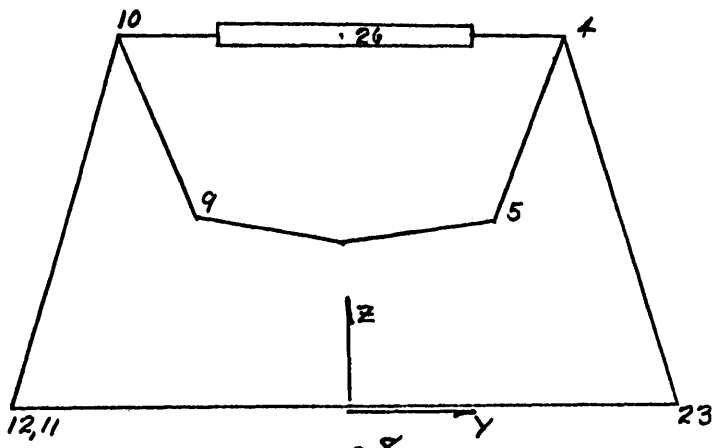

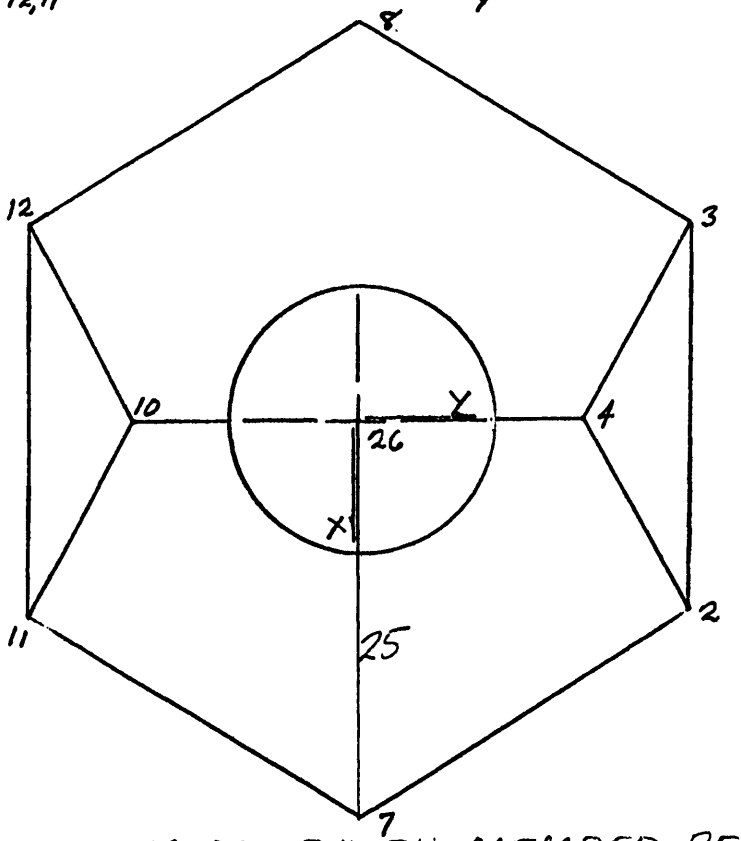

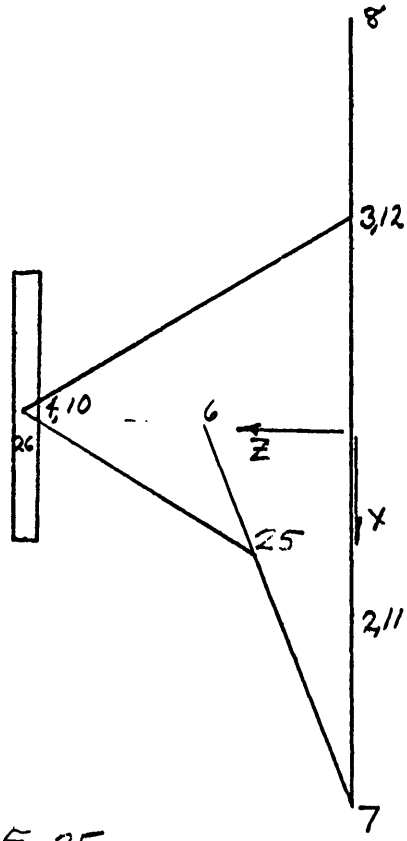

MODE: SIXTH, MEMBER RESONANCE, 25

FREQUENCY: 1.62 CPS

FIGURE -10-

PREPARED BY _____ APPROVED BY _____ SUBMITTED BY _____

NATIONAL RADIO ASTRONOMY OBSERVATORY
POST OFFICE BOX 2
GREEN BANK, WEST VIRGINIA 24944
TELEPHONE ARBOVALE 456-2011

PROJECT: 300 FT. DIA. HOMOLOGY TELESCOPE

SUBJECT: DYNAMIC ANALYSIS

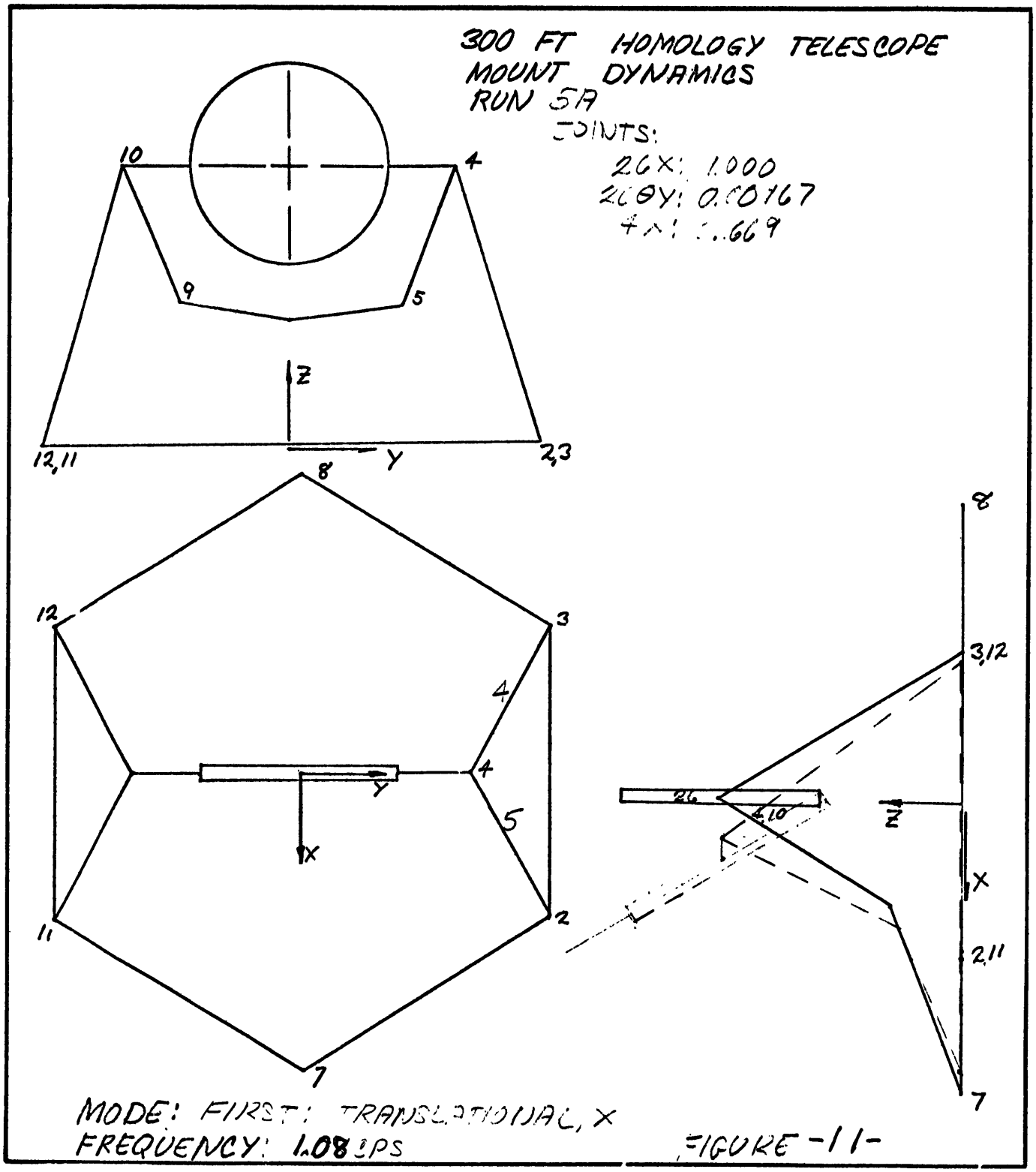

FIGURE -11-

PREPARED BY _____ APPROVED BY _____ SUBMITTED BY _____

NATIONAL RADIO ASTRONOMY OBSERVATORY
POST OFFICE BOX 2
GREEN BANK, WEST VIRGINIA 24944
TELEPHONE ARBOVALE 456-3011

PROJECT: 300 FT. DIA. HOMOLOGY TELESCOPE

SUBJECT: DYNAMIC ANALYSIS

300 FT HOMOLOGY TELESCOPE
MOUNT DYNAMICS
RUN 5A

MEMBERS: 5: 41.120
4: 0.991

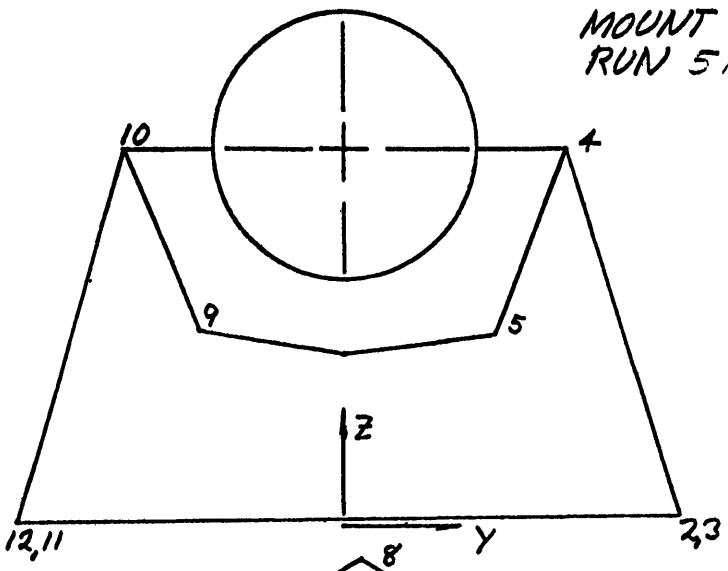

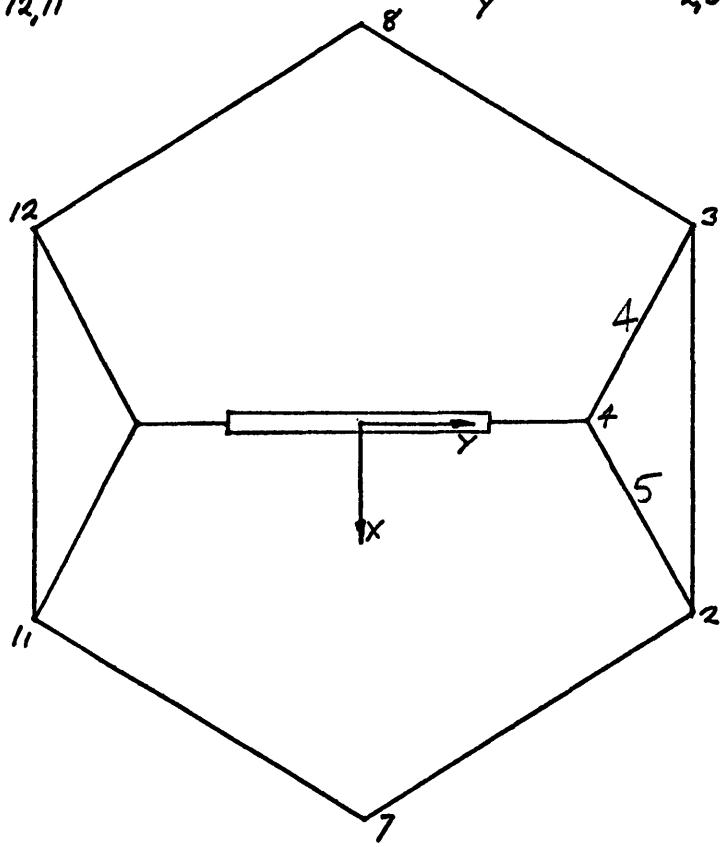

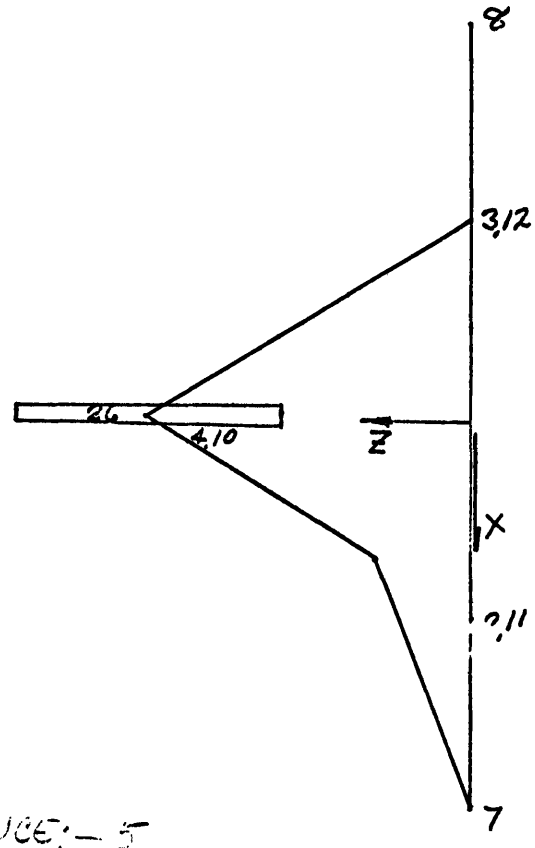

MODE: SECOND MEMBER RESONANCE; — 5
FREQUENCY: 1.49 CPS

FIGURE -12-

PREPARED BY _____ APPROVED BY _____ SUBMITTED BY _____

NATIONAL RADIO ASTRONOMY OBSERVATORY
POST OFFICE BOX 2
GREEN BANK, WEST VIRGINIA 24944
TELEPHONE ARBOVALE 456-2011

PROJECT: 300 FT. DIA. HOMOLOGY TELESCOPE

SUBJECT: DYNAMIC ANALYSIS

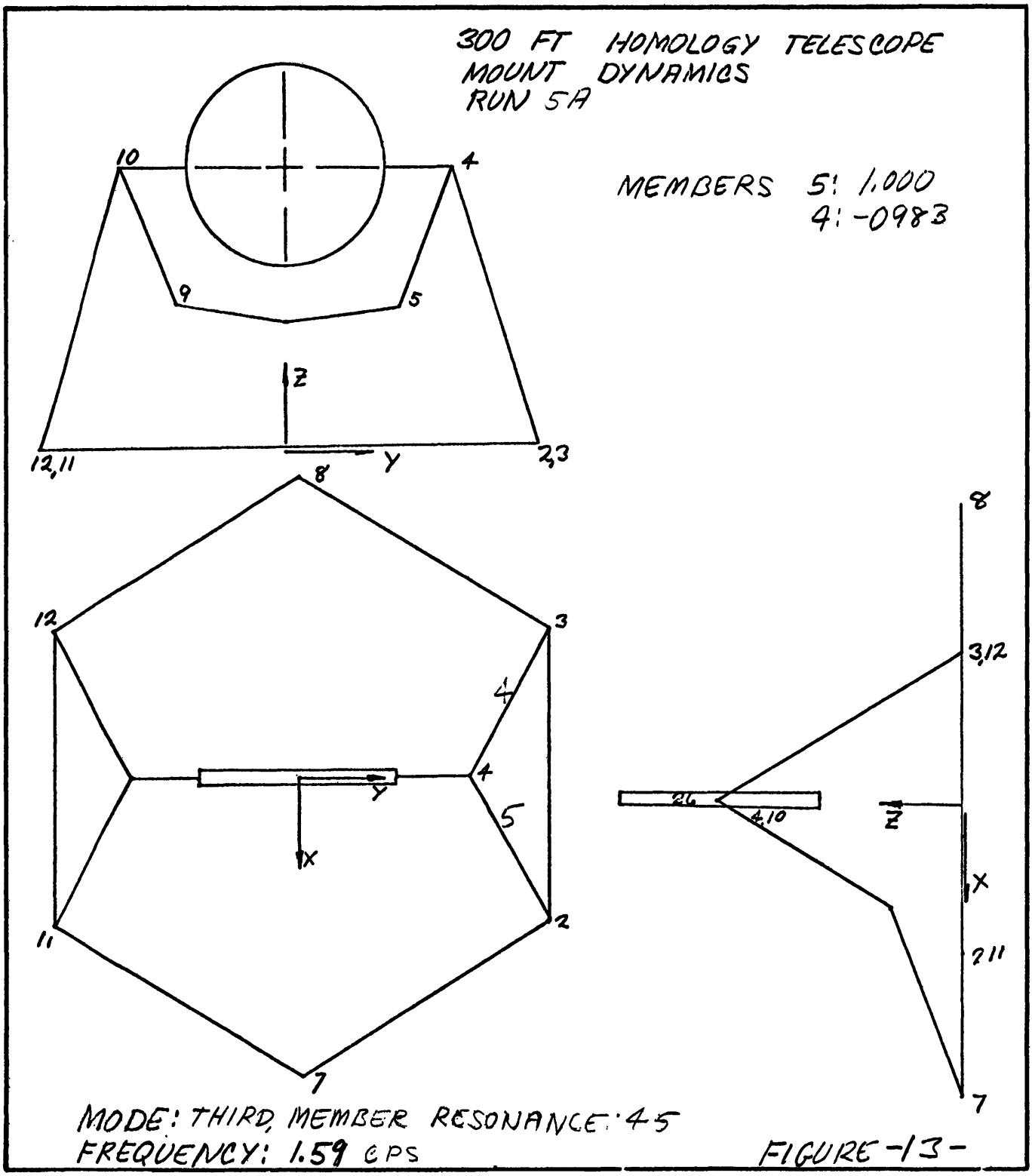

FIGURE -13-

PREPARED BY _____ APPROVED BY _____ SUBMITTED BY _____

NATIONAL RADIO ASTRONOMY OBSERVATORY
POST OFFICE BOX 2
GREEN BANK, WEST VIRGINIA 24944
TELEPHONE ARBOVALE 456-2011

PROJECT: 300 FT. DIA. HOMOLOGY TELESCOPE

SUBJECT: DYNAMIC ANALYSIS

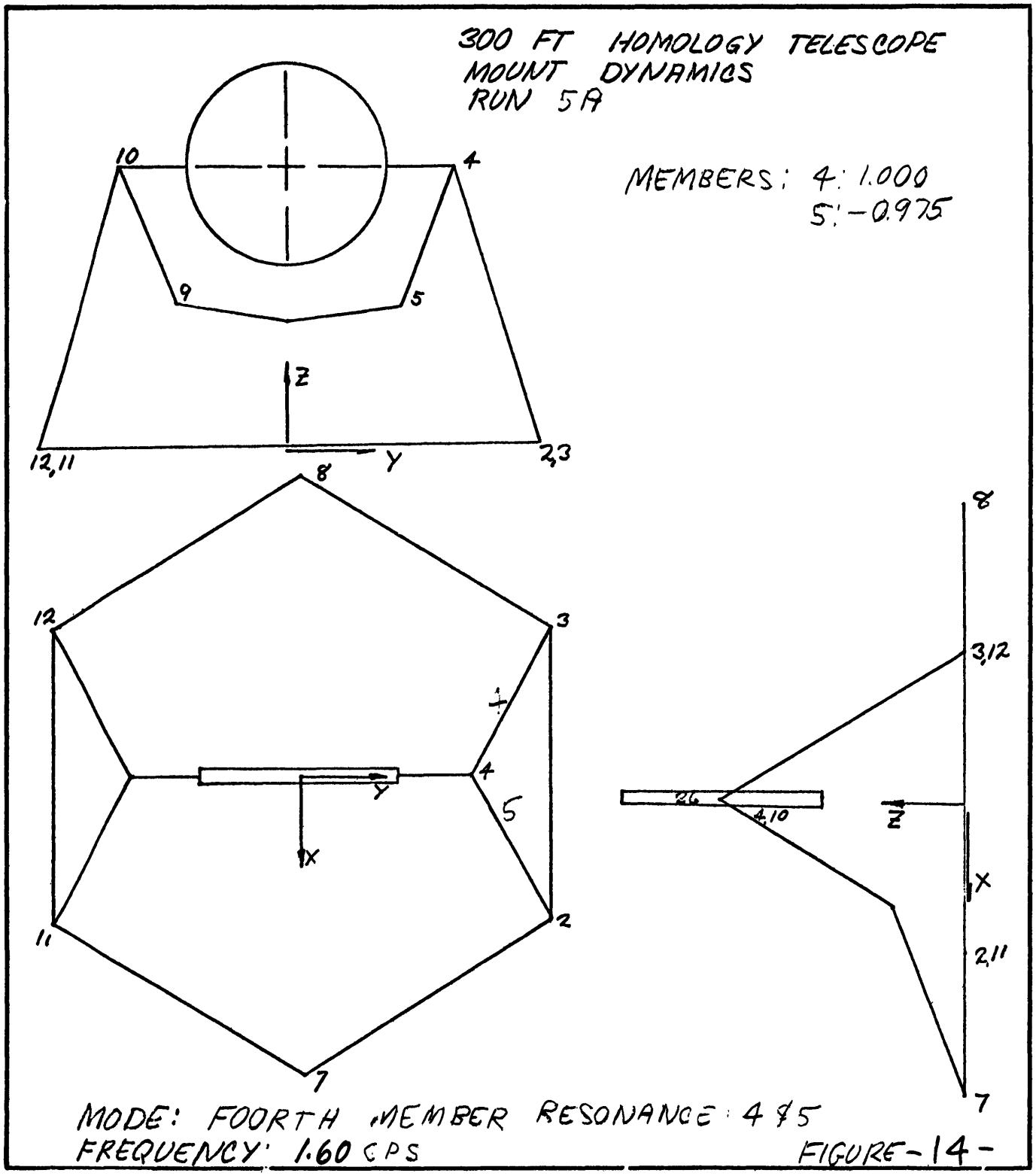

FIGURE -14-

PREPARED BY _____ APPROVED BY _____ SUBMITTED BY _____

NATIONAL RADIO ASTRONOMY OBSERVATORY
POST OFFICE BOX 2
GREEN BANK, WEST VIRGINIA 24944
TELEPHONE ARBOVALE 456-2011

PROJECT: 300 FT. DIA. HOMOLOGY TELESCOPE

SUBJECT: DYNAMIC ANALYSIS

300 FT HOMOLOGY TELESCOPE
MOUNT DYNAMICS
RUN 5H

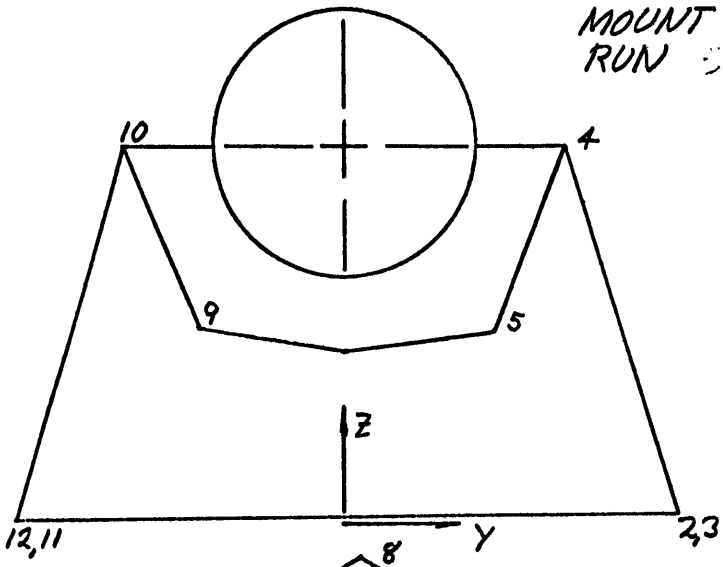

MEMBERS: 4: 1.000
5: 0.983

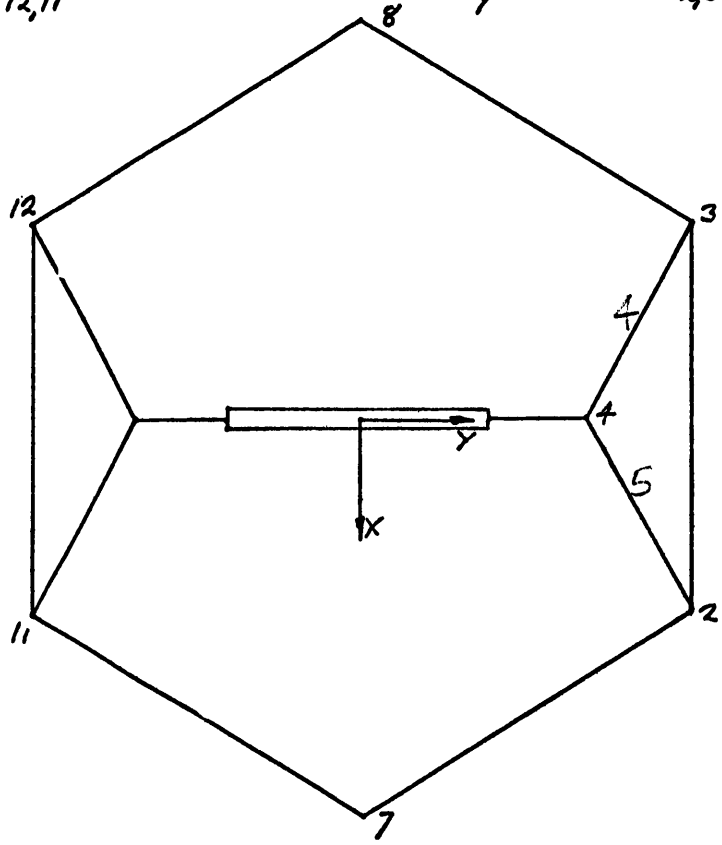

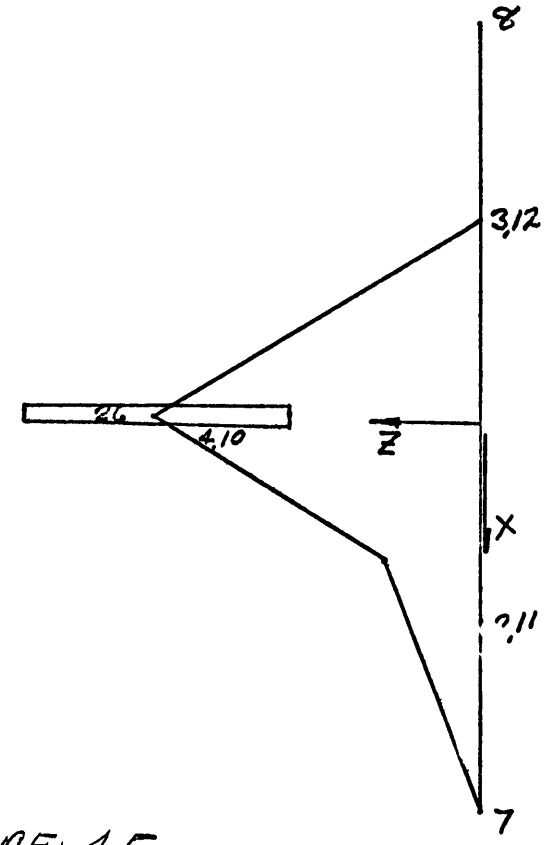

MODE: FIFTH, MEMBER RESONANCE; 4-5
FREQUENCY: 1.61 CPS

FIGURE 15

PREPARED BY _____ APPROVED BY _____ SUBMITTED BY _____

NATIONAL RADIO ASTRONOMY OBSERVATORY
POST OFFICE BOX 2
GREEN BANK, WEST VIRGINIA 24944
TELEPHONE ARBOVALE 456-2011

PROJECT: 300 FT. DIA. HOMOLOGY TELESCOPE

SUBJECT: DYNAMIC ANALYSIS

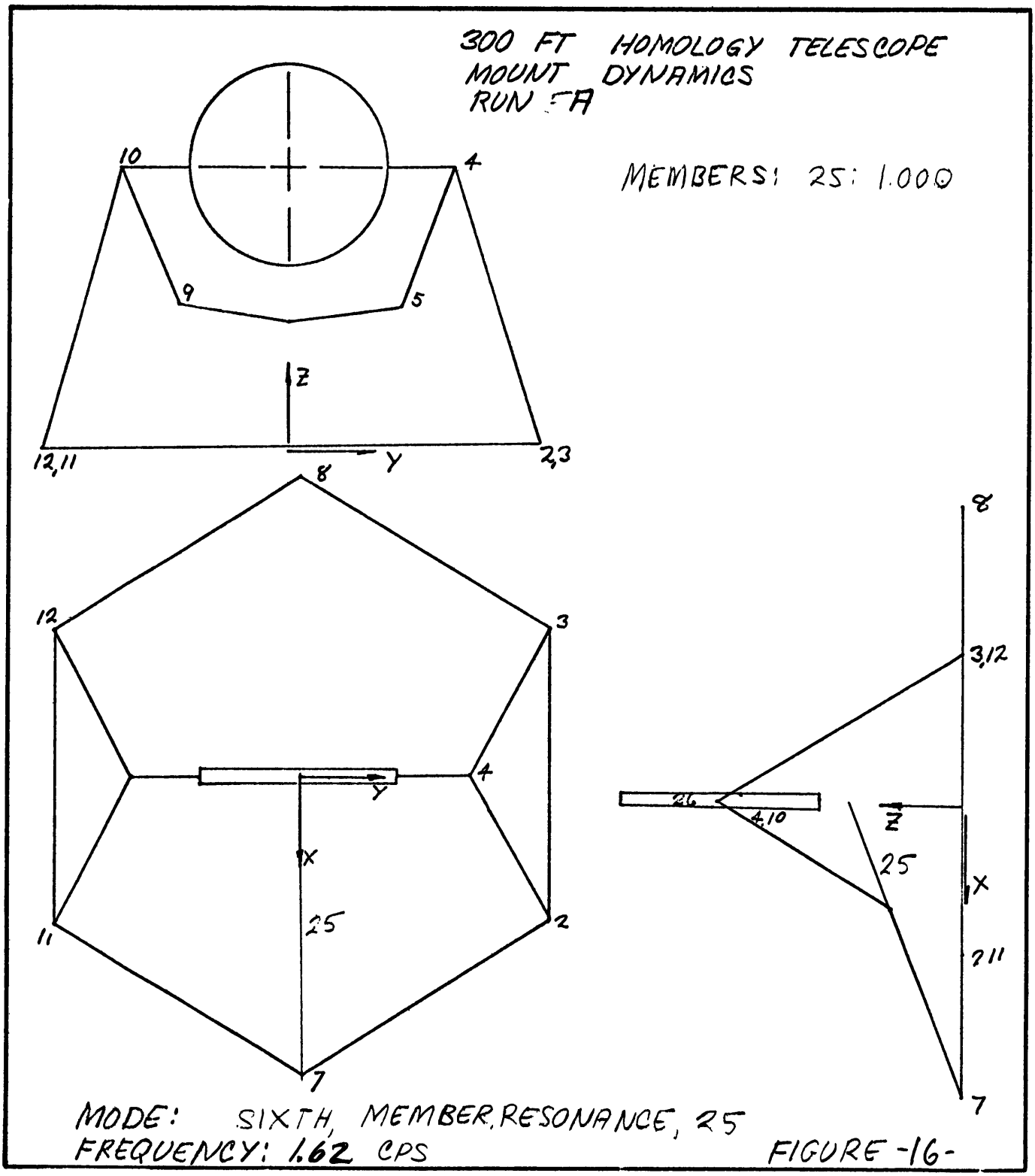

MODE: SIXTH, MEMBER RESONANCE, 25
FREQUENCY: 1.62 CPS

FIGURE -16-

PREPARED BY _____ APPROVED BY _____ SUBMITTED BY _____

NATIONAL RADIO ASTRONOMY OBSERVATORY
POST OFFICE BOX 2
GREEN BANK, WEST VIRGINIA 24944
TELEPHONE ARBOVALE 456-2011

PROJECT: 300 FT. DIA. HOMOLOGY TELESCOPE

SUBJECT: DYNAMIC ANALYSIS

300 FT HOMOLOGY TELESCOPE
MOUNT DYNAMICS
RUN 6

JOINT:
26X : 1.000
26θY : 0.00150
4X : .0790

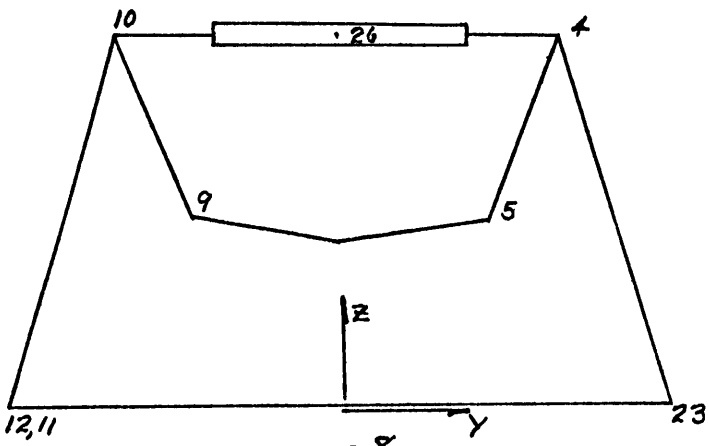

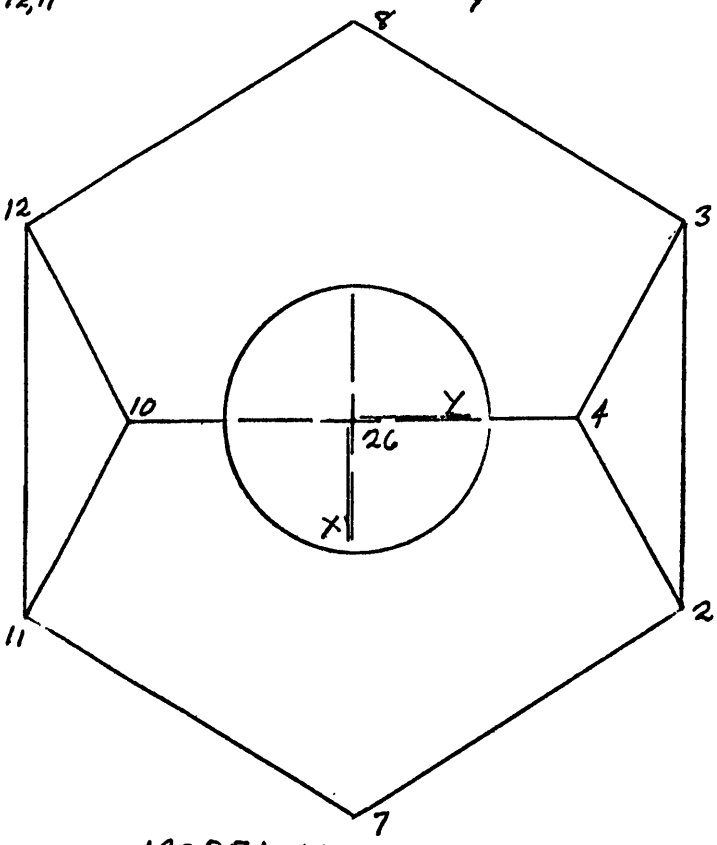

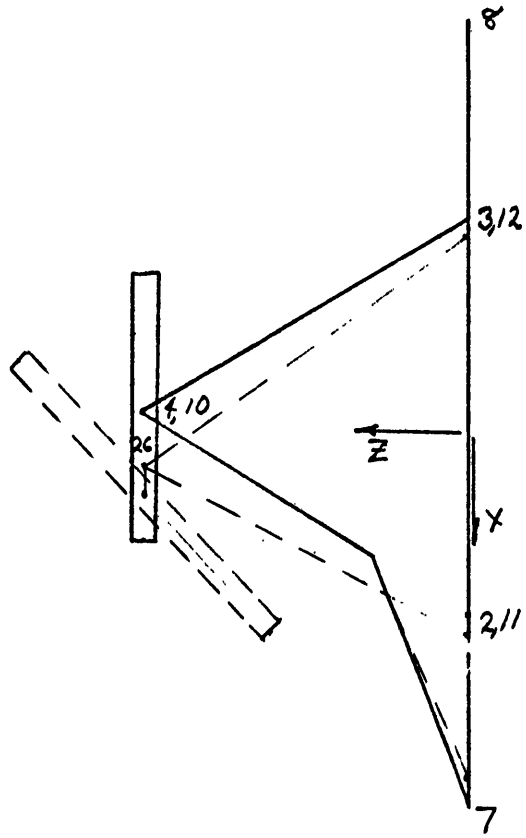

MODE: FIRST TRANSLATIONAL, X
FREQUENCY: 1.01 CPS

FIGURE -17-

PREPARED BY _____ APPROVED BY _____ SUBMITTED BY _____

NATIONAL RADIO ASTRONOMY OBSERVATORY
POST OFFICE BOX 2
GREEN BANK, WEST VIRGINIA 24944
TELEPHONE ARBOVALE 456-2011

PROJECT: 300 FT. DIA. HOMOLOGY TELESCOPE

SUBJECT: DYNAMIC ANALYSIS

300 FT HOMOLOGY TELESCOPE
MOUNT DYNAMICS
RUN 6

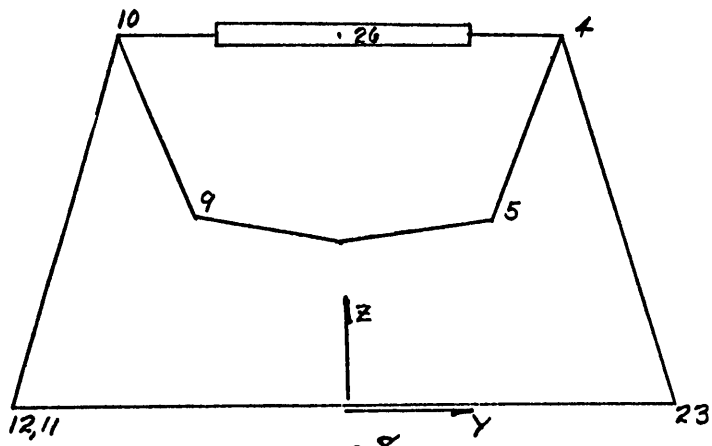

MEMBERS:
5: 1.000
4: 0.978

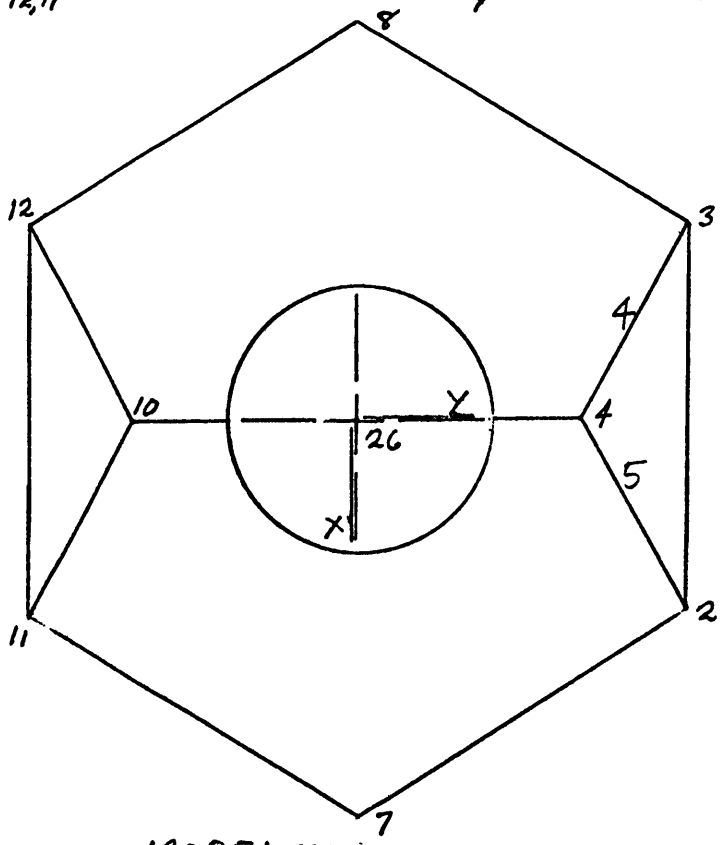

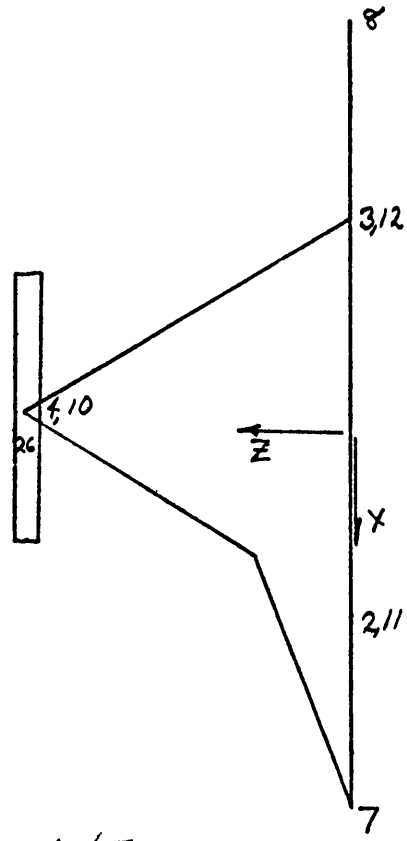

MODE: SECOND, MEMBER RESONANCE, A#5
FREQUENCY: 1.43 CPS

FIGURE - 18 -

PREPARED BY _____ APPROVED BY _____ SUBMITTED BY _____

NATIONAL RADIO ASTRONOMY OBSERVATORY
POST OFFICE BOX 2
GREEN BANK, WEST VIRGINIA 24944
TELEPHONE ARBOVALE 456-2011

PROJECT: 300. FT. DIA. HOMOLOGY TELESCOPE

SUBJECT: DYNAMIC ANALYSIS

300 FT HOMOLOGY TELESCOPE
MOUNT DYNAMICS
RUN 6

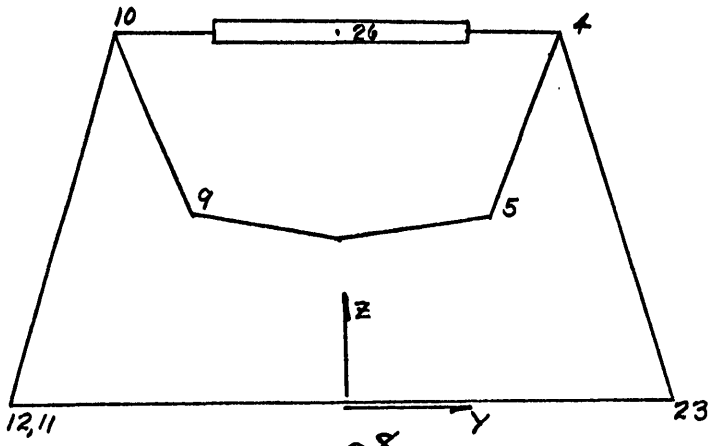

MEMBER:
5: 1.000
4: -0.993

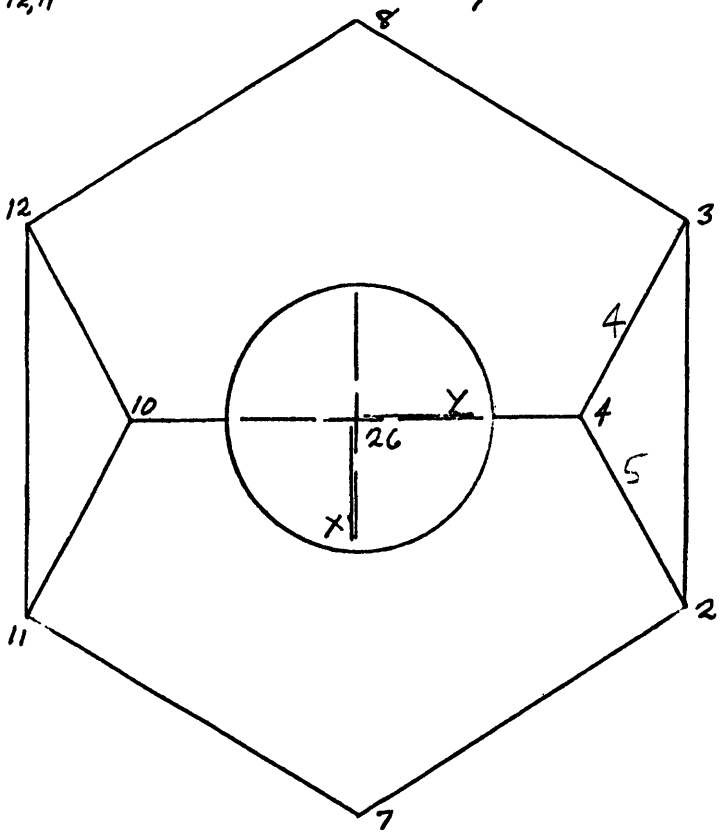

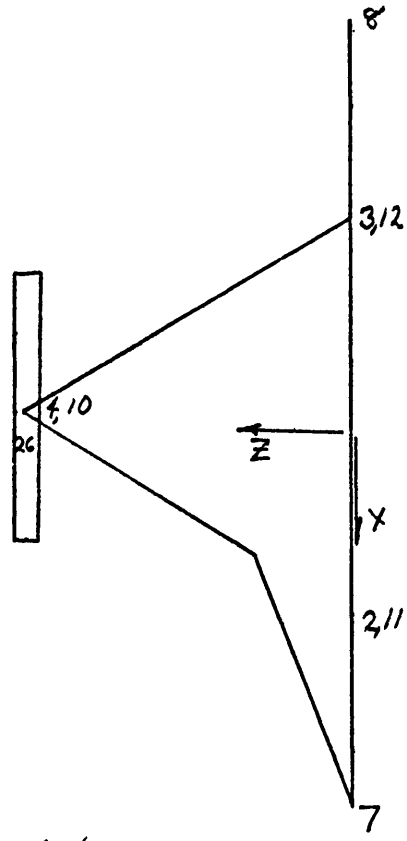

MODE: THIRD MEMBER RESONANCE, 4 & 5
FREQUENCY: 1.54 CPS

FIGURE -19-

PREPARED BY _____ APPROVED BY _____ SUBMITTED BY _____

NATIONAL RADIO ASTRONOMY OBSERVATORY
POST OFFICE BOX 2
GREEN BANK, WEST VIRGINIA 24944
TELEPHONE ARBOVALE 456-2011

PROJECT: 300 FT. DIA. HOMOLOGY TELESCOPE

SUBJECT: DYNAMIC ANALYSIS

300 FT HOMOLOGY TELESCOPE
MOUNT DYNAMICS
RUN 6

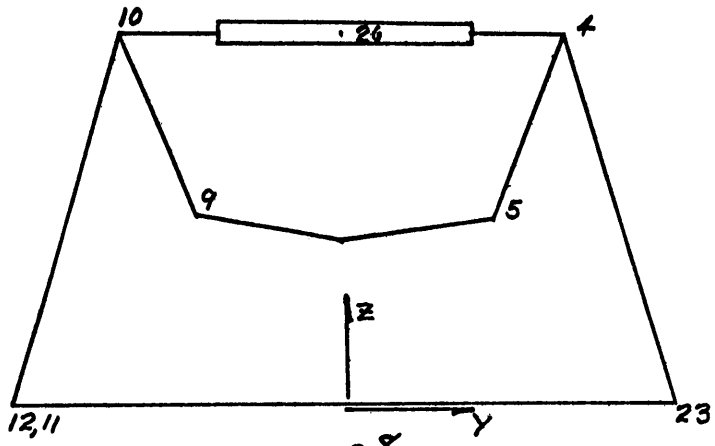

MEMBER
4: 1.000
5: -0.999

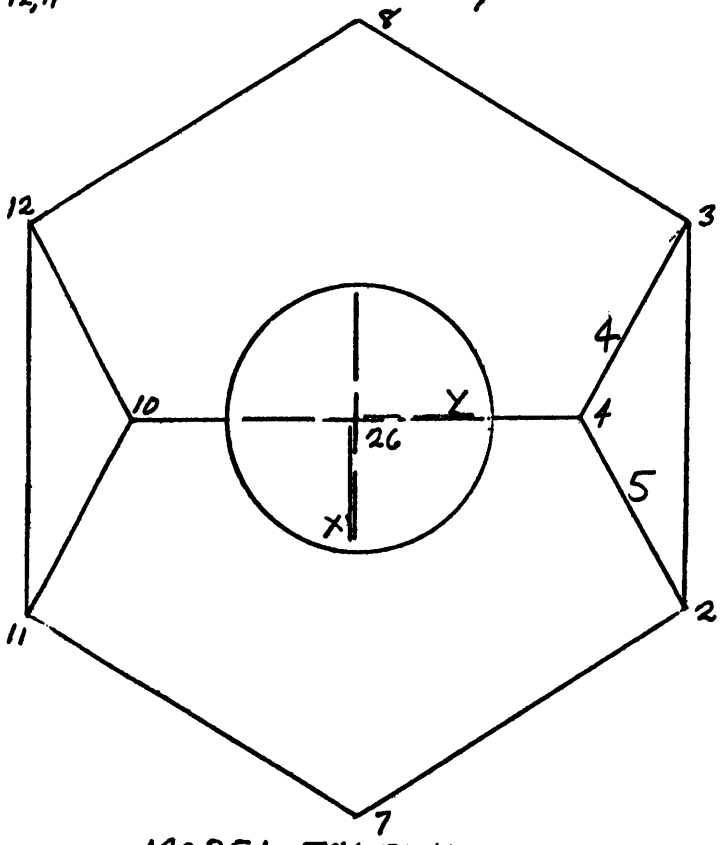

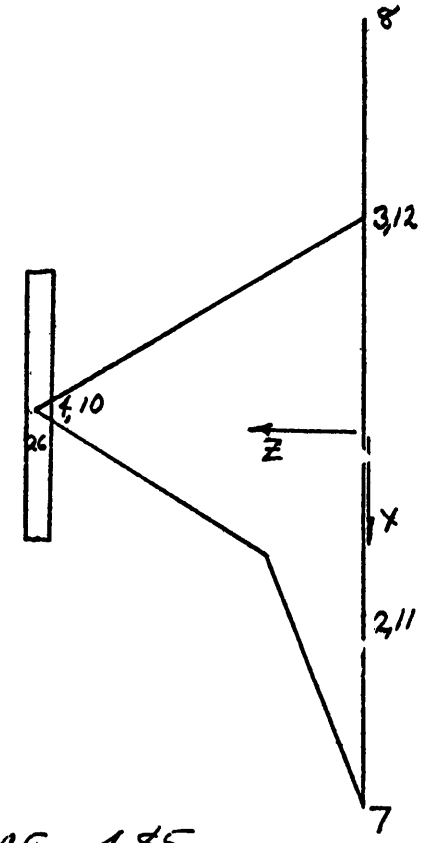

MODE: FOURTH, MEMBER RESONANCE, 4 & 5
FREQUENCY: 1.60 CPS

FIGURE-20-

PREPARED BY _____ APPROVED BY _____ SUBMITTED BY _____

NATIONAL RADIO ASTRONOMY OBSERVATORY
POST OFFICE BOX 2
GREEN BANK, WEST VIRGINIA 24944
TELEPHONE ARBOVALE 456-2011

PROJECT: 300 FT. DIA. HOMOLOGY TELESCOPE

SUBJECT: DYNAMIC ANALYSIS

300 FT HOMOLOGY TELESCOPE
MOUNT DYNAMICS
RUN 6

MEMBER:
4: 0.958
5: 1.000

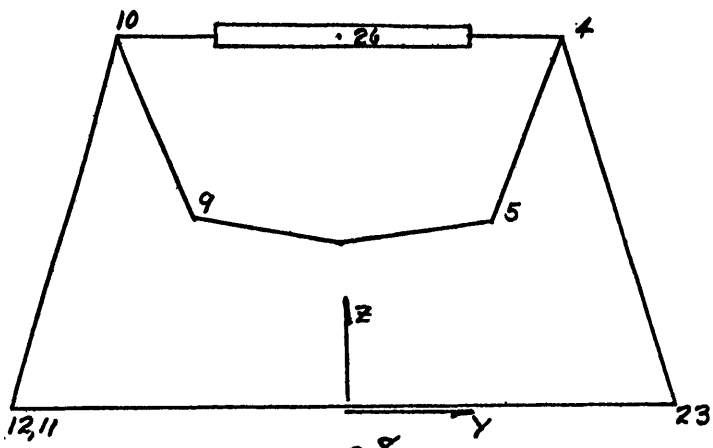

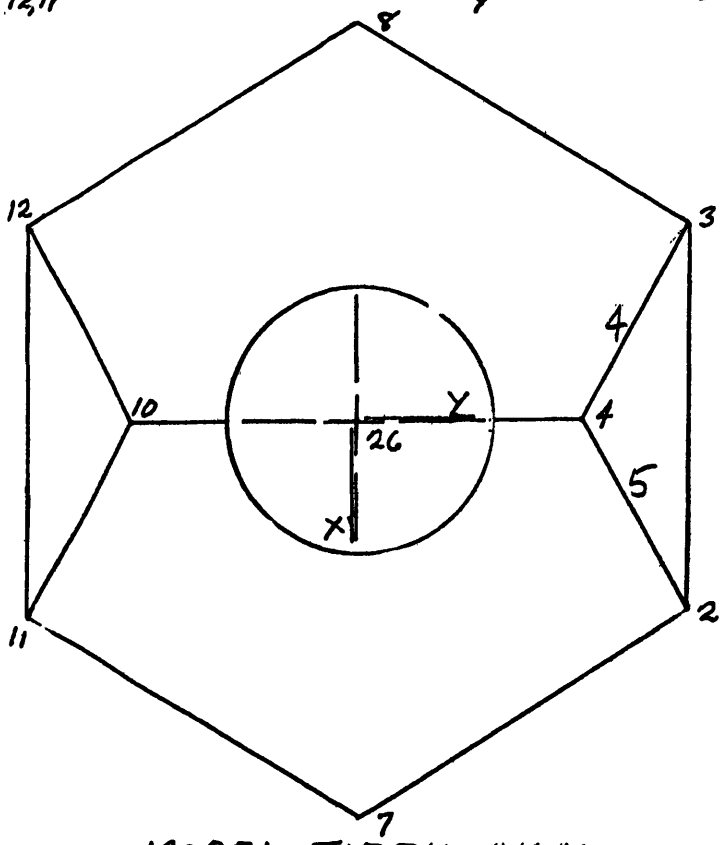

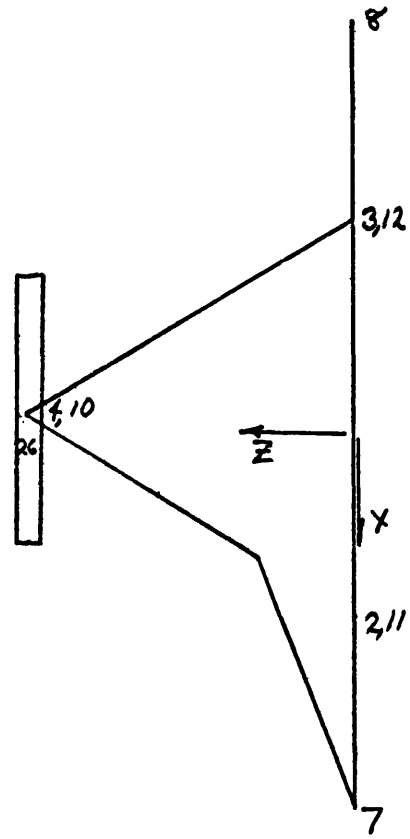

MODE: FIFTH, MEMBER RESONANCE, 15
FREQUENCY: 1.60 CPS

FIGURE -21-

PREPARED BY _____ APPROVED BY _____ SUBMITTED BY _____

NATIONAL RADIO ASTRONOMY OBSERVATORY
POST OFFICE BOX 2
GREEN BANK, WEST VIRGINIA 24944
TELEPHONE ARBOVALE 456-2011

PROJECT: 300 FT. DIA. HOMOLOGY TELESCOPE

SUBJECT: DYNAMIC ANALYSIS

300 FT HOMOLOGY TELESCOPE
MOUNT DYNAMICS
RUN 6

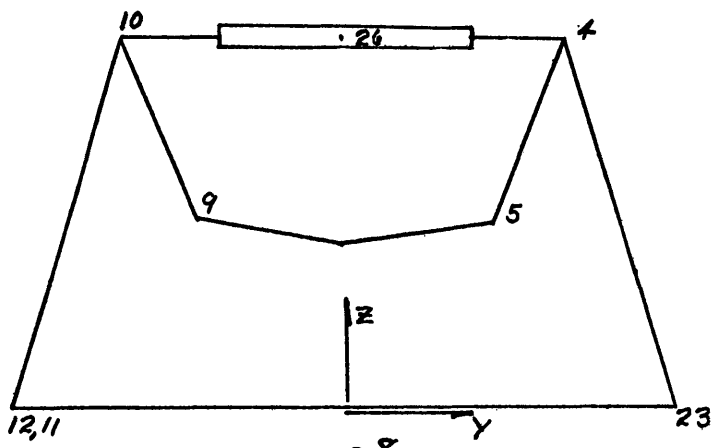

MEMBER:
5: 1.000
4: 0.958

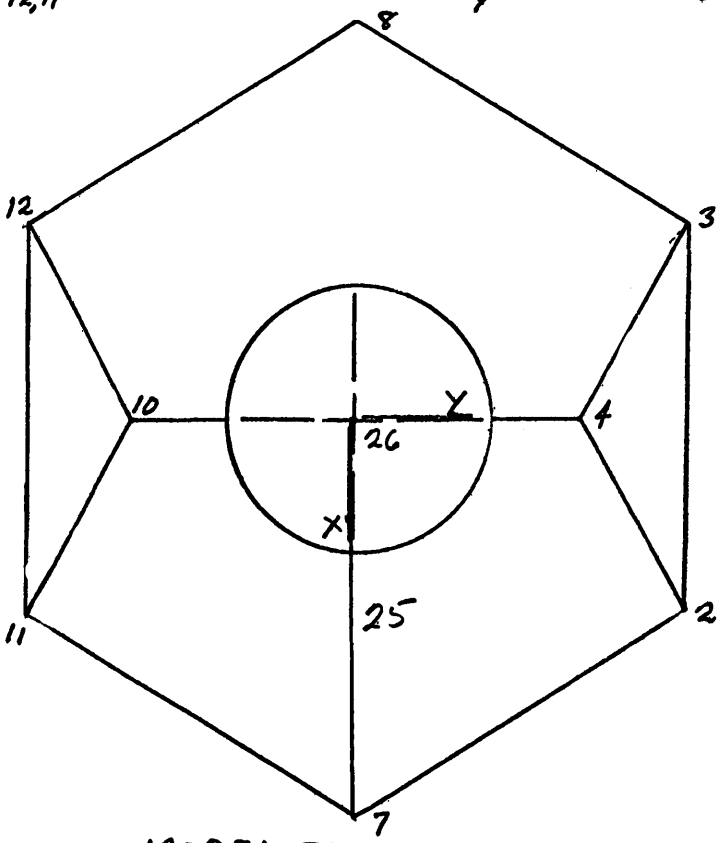

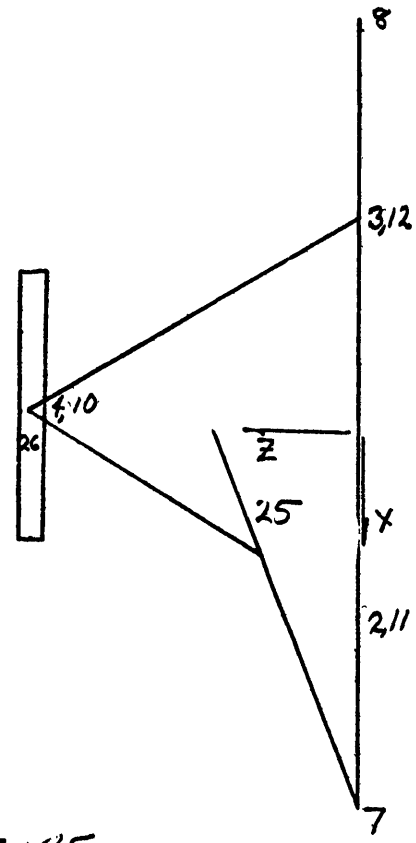

MODE: SIXTH, MEMBER RESONANCE, 25
FREQUENCY: 1.61 CPS

FIGURE -22-

PREPARED BY _____ APPROVED BY _____ SUBMITTED BY _____

NATIONAL RADIO ASTRONOMY OBSERVATORY
POST OFFICE BOX 2
GREEN BANK, WEST VIRGINIA 24944
TELEPHONE ARBOVALE 456-2011

PROJECT: 300 FT DIA. HOMOLOGY TELESCOPE

SUBJECT: DYNAMIC ANALYSIS

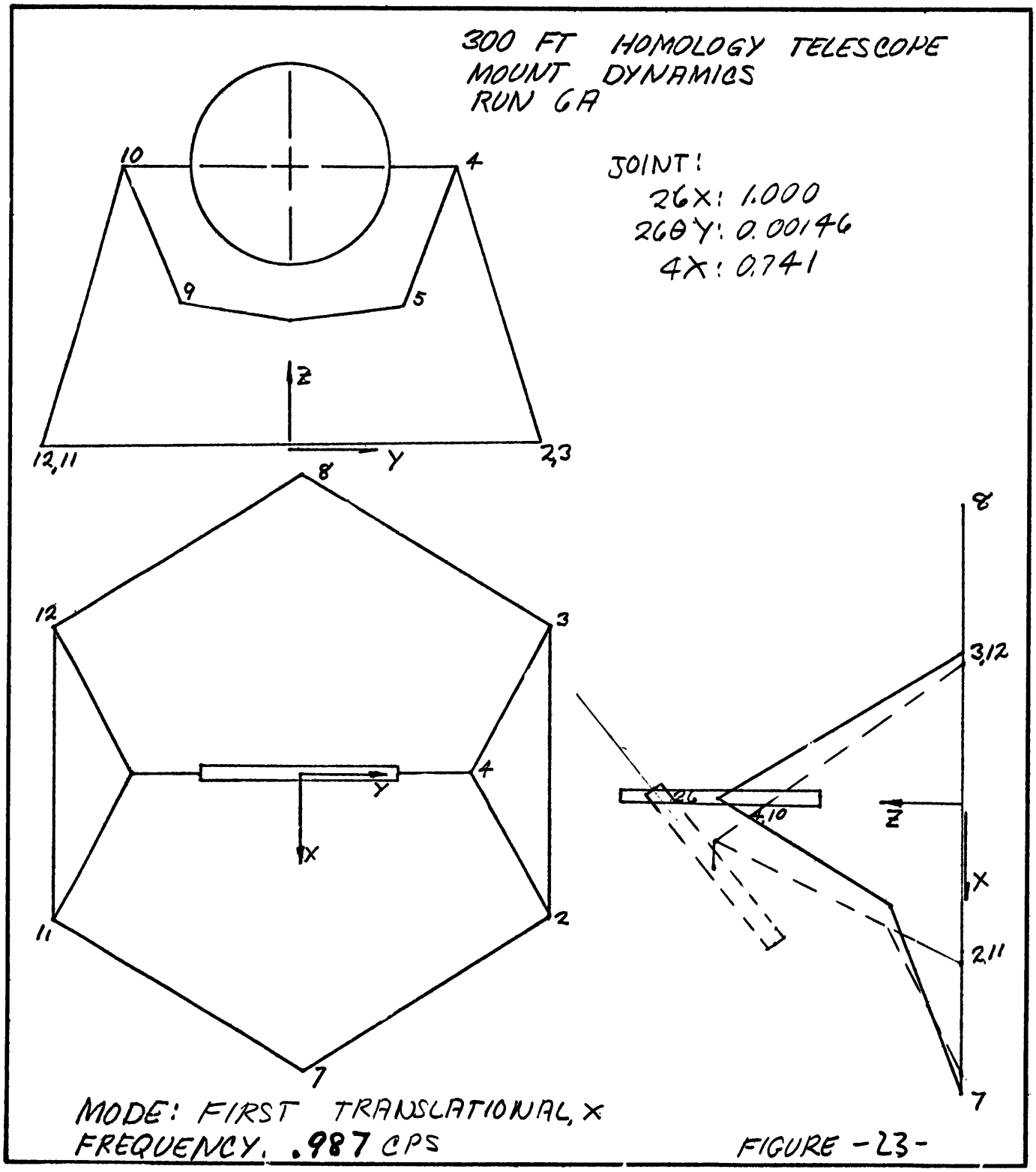

FIGURE -23-

PREPARED BY _____ APPROVED BY _____ SUBMITTED BY _____

NATIONAL RADIO ASTRONOMY OBSERVATORY
POST OFFICE BOX 2
GREEN BANK, WEST VIRGINIA 24944
TELEPHONE ARBINVALE 456-2011

PROJECT: 300 FT. DIA. HOMOLOGY TELESCOPE

SUBJECT: DYNAMIC ANALYSIS

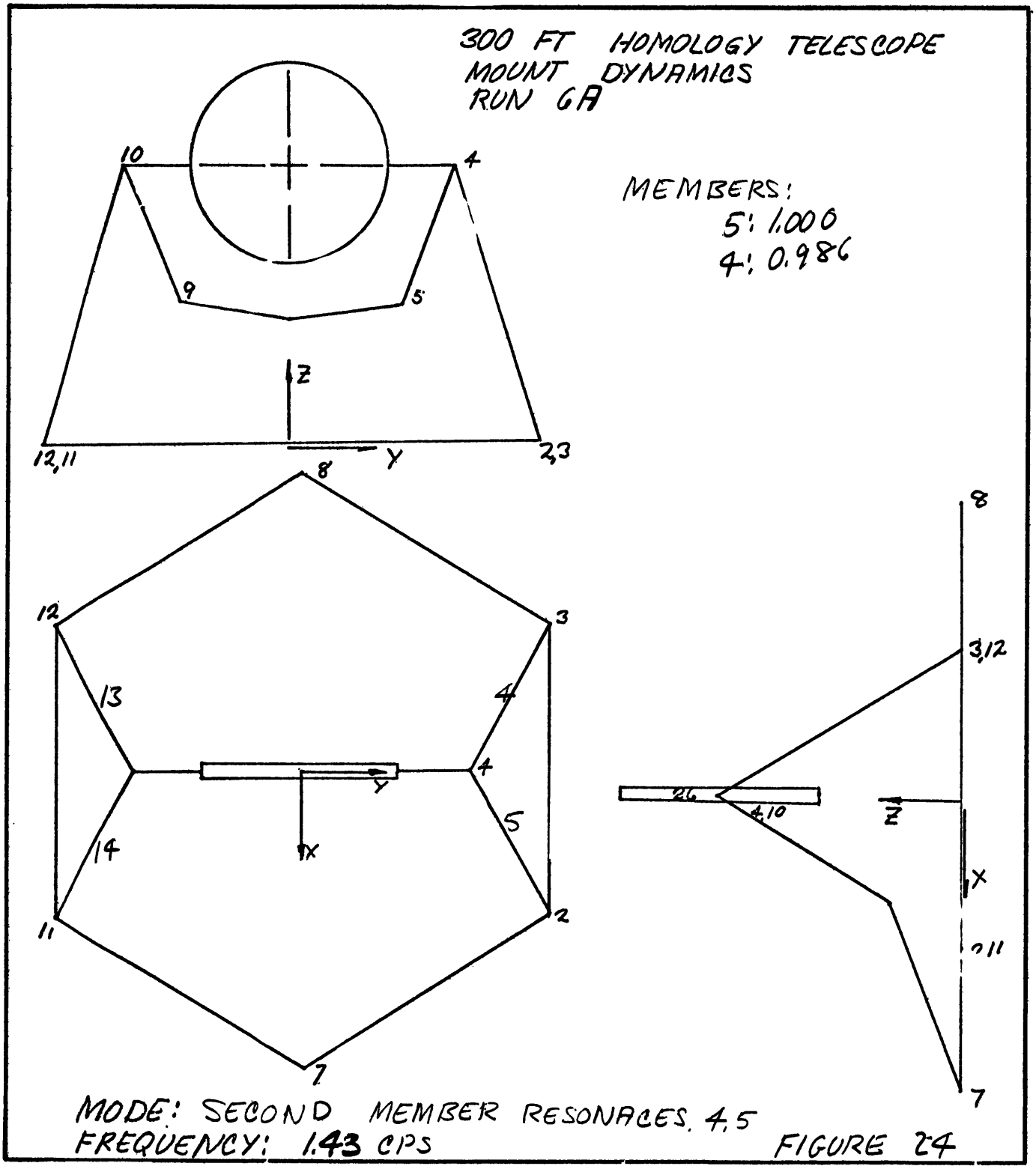

FIGURE 24

PREPARED BY _____ APPROVED BY _____ SUBMITTED BY _____

NATIONAL RADIO ASTRONOMY OBSERVATORY
POST OFFICE BOX 2
GREEN BANK, WEST VIRGINIA 24944
TELEPHONE ARBOVALE 456-2011

PROJECT: 300 FT. DIA. HOMOLOGY TELESCOPE

SUBJECT: DYNAMIC ANALYSIS

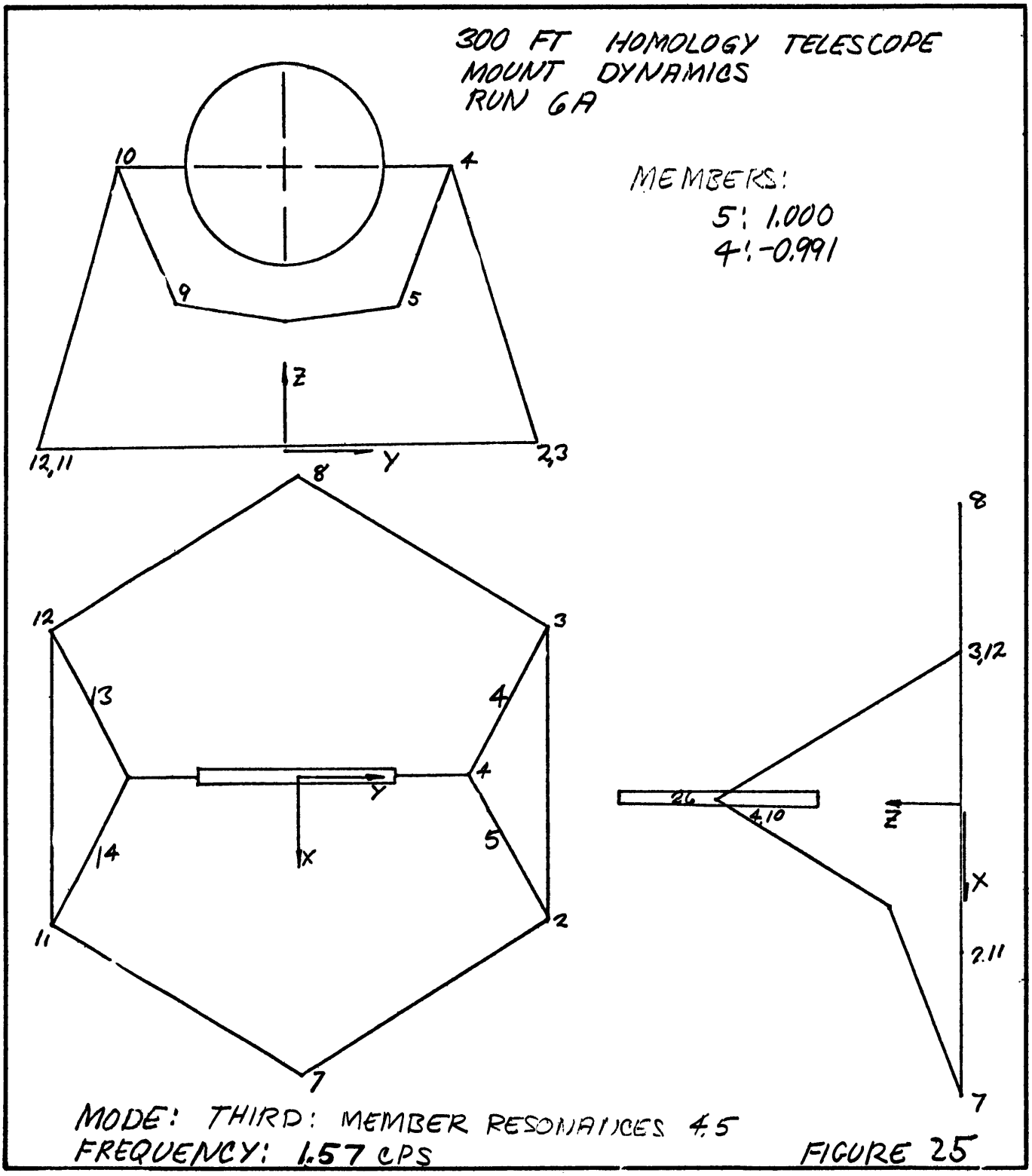

FIGURE 25

PREPARED BY _____ APPROVED BY _____ SUBMITTED BY _____

NATIONAL RADIO ASTRONOMY OBSERVATORY
POST OFFICE BOX 2
GREEN BANK, WEST VIRGINIA 24944
TELEPHONE ARBOVALE 456-3011

PROJECT: 300 FT. DIA. HOMOLOGY TELESCOPE

SUBJECT: DYNAMIC ANALYSIS

300 FT HOMOLOGY TELESCOPE
MOUNT DYNAMICS
RUN 6A

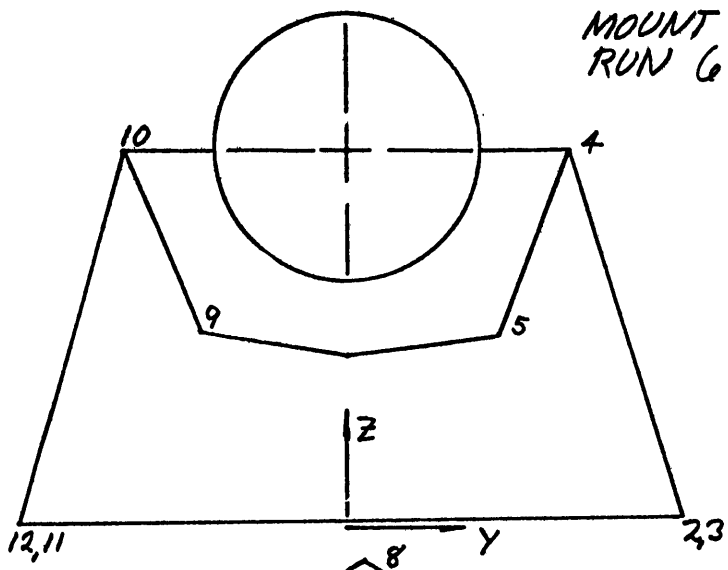

MEMBERS:
4: 1.000
5: -0.996

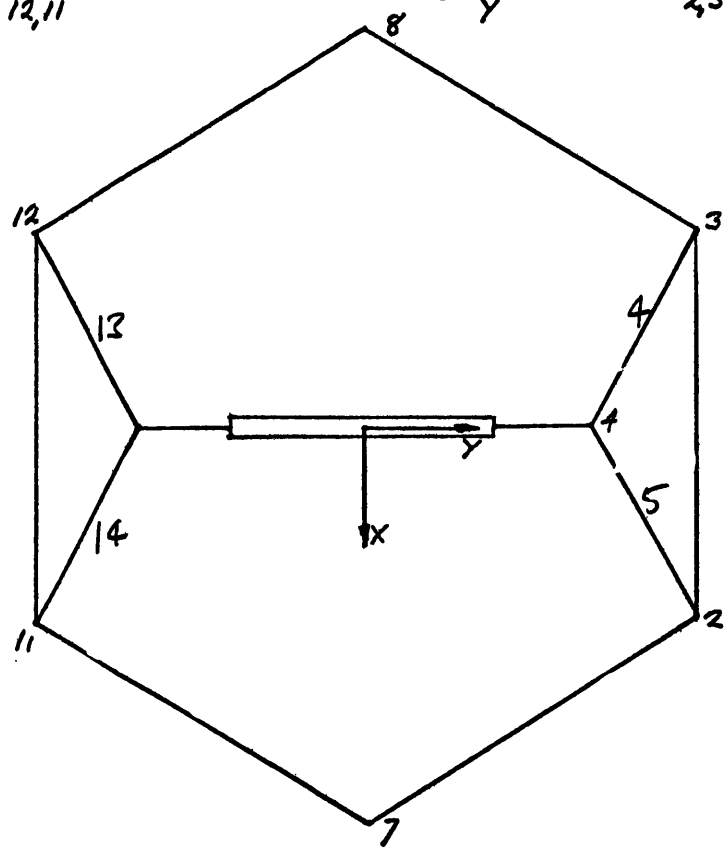

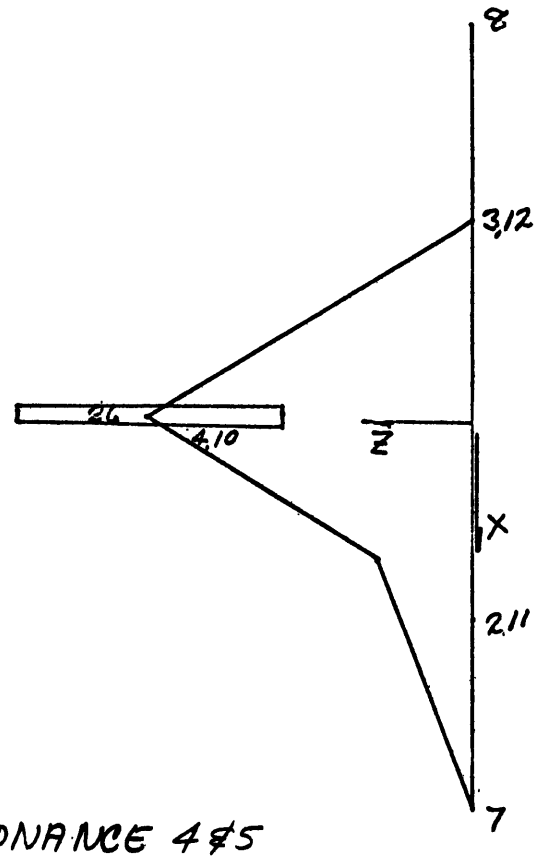

MODE: FOURTH: MEMBER RESONANCE 4 & 5
FREQUENCY. 1.60 CPS

FIGURE -76-

PREPARED BY _____ APPROVED BY _____ SUBMITTED BY _____

NATIONAL RADIO ASTRONOMY OBSERVATORY
POST OFFICE BOX 2
GREEN BANK, WEST VIRGINIA 24944
TELEPHONE ARBOVALE 456-2011

PROJECT: 300 FT. DIA. HOMOLOGY TELESCOPE

SUBJECT: DYNAMIC ANALYSIS

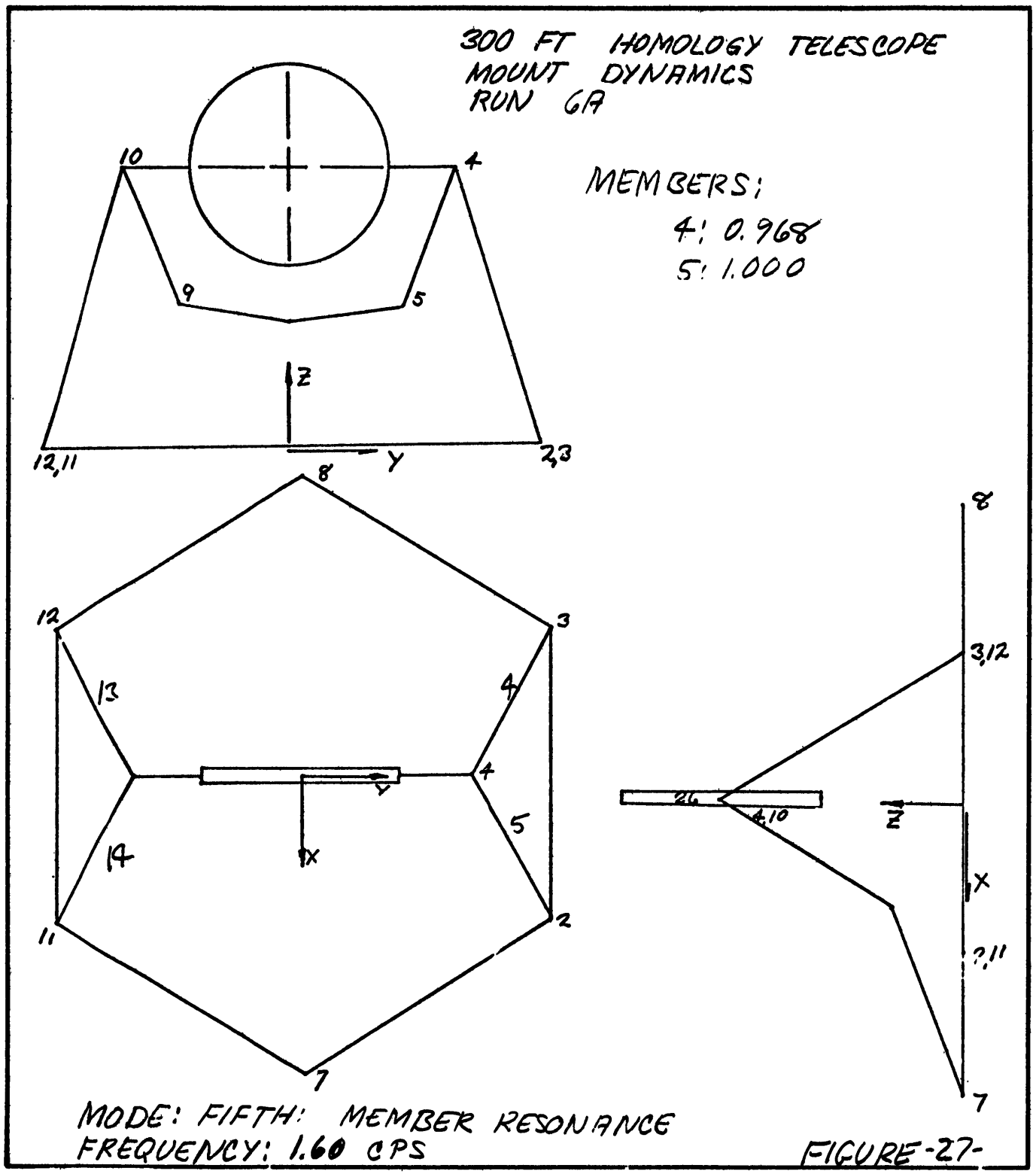

FIGURE-27-

PREPARED BY _____ APPROVED BY _____ SUBMITTED BY _____

NATIONAL RADIO ASTRONOMY OBSERVATORY
POST OFFICE BOX 2
GREEN BANK, WEST VIRGINIA 24944
TELEPHONE ARBOVALE 456-2011

PROJECT: 300 FT. DIA. HOMOLOGY TELESCOPE

SUBJECT: DYNAMIC ANALYSIS

300 FT HOMOLOGY TELESCOPE
MOUNT DYNAMICS
RUN 6A

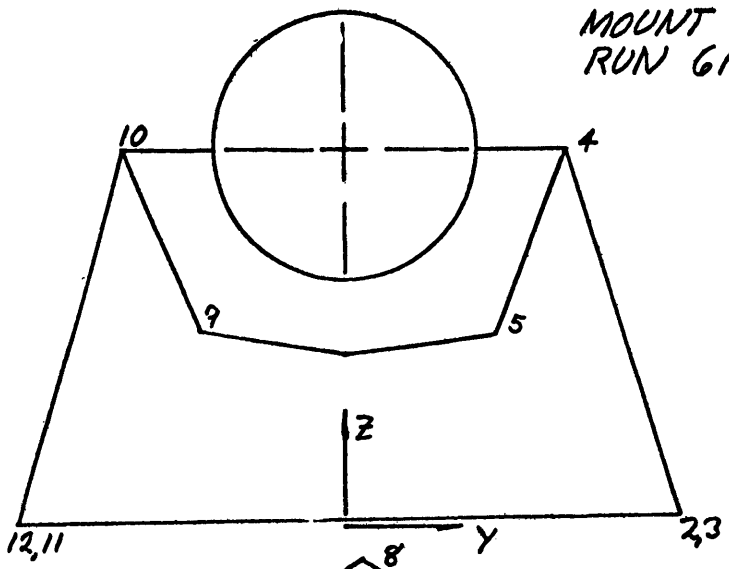

MEMBER
5: 1.000
4: 0.961

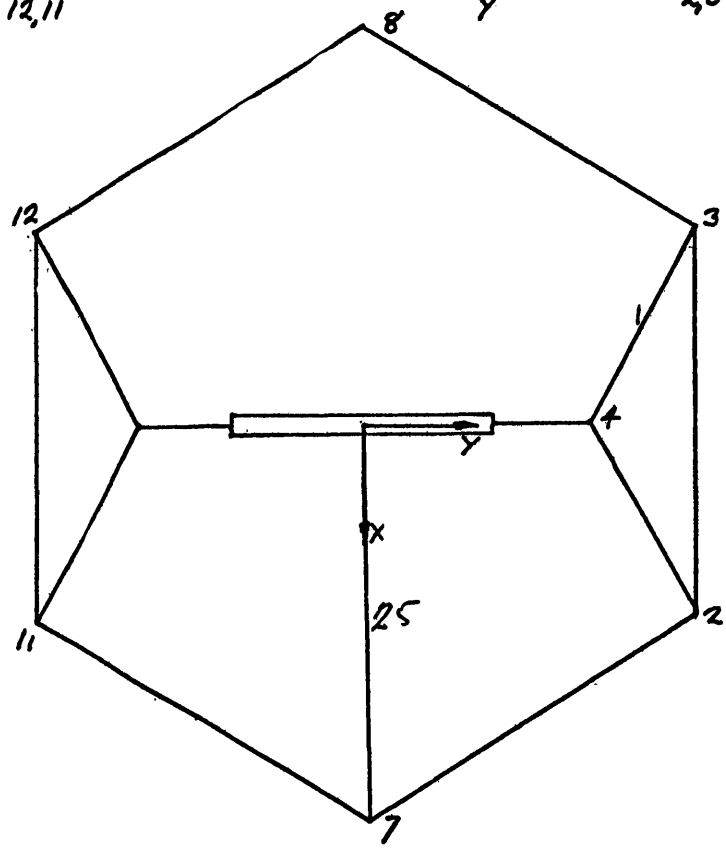

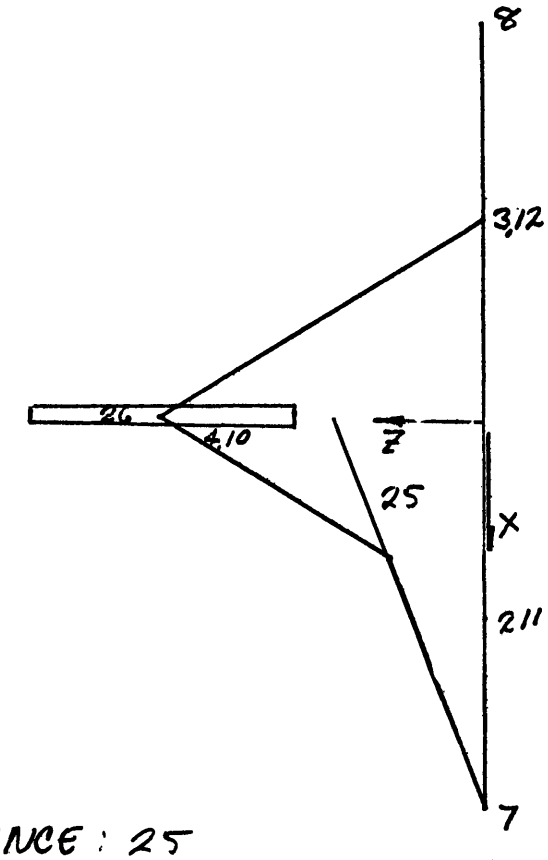

MODE: SIXTH: MEMBER RESONANCE: 25
FREQUENCY: 1.61 CPS

FIGURE -28-

PREPARED BY _____ APPROVED BY _____ SUBMITTED BY _____

7.5. ANALYSIS OF EQUIVALENT REFLECTOR STIFFNESSES

{BASED ON RESULTS OF DYNAMIC ANALYSIS PERFORMED BY SIMPSON - GUMPERTZ AND HEGER}

The data available on the dynamic analysis of the reflector is not complete in the following respects:

1. The support conditions at the elevation shafts and elevation drive are not defined.

2. The reflector masses or inertias used in the dynamic analysis of the reflector are not given.

For the following approximate analysis we have assumed that:

1. The structure is attached through the elevation shafts and bearings to a reference, which is fixed in the X, Y, and Z directions.

2. The structure is rigidly restrained in the X direction at the elevation drive.

3. The weight used in the dynamic analysis is 2.340×10^6 lbs.

4. The moments of inertia of the dynamic model are proportional to the ratio of its weight and the weight used in Runs 5 - 6A (2.560×10^6 lbs.).

A calculation of an effective "concentrated" stiffness for the reflector must further assume that:

NATIONAL RADIO ASTRONOMY OBSERVATORY
POST OFFICE BOX 2
GREEN BANK, WEST VIRGINIA 24944
TELEPHONE ARBOVALE 456-2011

PROJECT: 300 FT. DIA. HOMOLOGY TELESCOPE

SUBJECT: DYNAMIC ANALYSIS

1. The various modes of vibration of the reflector can be interpreted as simple one-degree-of-freedom vibrations.

2. The effective stiffness calculated at the elevation shafts can be assumed to act along the arbitrary coordinate axes.

PREPARED BY _____ APPROVED BY _____ SUBMITTED BY _____

NATIONAL RADIO ASTRONOMY OBSERVATORY
POST OFFICE BOX 2
GREEN BANK, WEST VIRGINIA 24944
TELEPHONE ARBOVALE 456-2011

PROJECT: 300 FT. DIA. HOMOLOGY TELESCOPE

SUBJECT: DYNAMIC ANALYSIS

EFFECTIVE STIFFNESS OF REFLECTOR STRUCTURE WHEN CONCENTRATED AT ELEVATION SHAFTS

REF: S. G. & H. INC. REPORT, 30 APR 69

X- DIRECTION:

FROM MODE 1 OF THE REFLECTOR, (ROCKING IN X- DIRECTION ABOUT POINT 50, THE ELEVATION DRIVE)

NATURAL FREQUENCY: $f = 2.58$ CPS

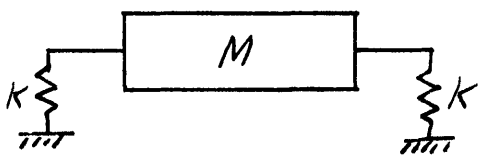

$$f = \frac{1}{2\pi}\sqrt{\frac{2K}{M}}$$

WHERE: $M = \frac{W}{g} = \frac{2{,}340 \times 10^6 \text{ LBF}}{386 \text{ IN/SEC}^2}$

$= 6060$ LBM

$$K'_x = \frac{f^2(4\pi^2)M}{2}$$

$$= 2\pi^2 f^2 M = 19.72 f^2 M$$

$$= 19.72 \times \overset{6.66}{\cancel{(2.58)^2}} \times 6060$$

$$= 7.95 \times 10^5 \text{ LBF/IN}$$

$$\frac{\text{RAD}^2}{\cancel{\text{CYC}^2}} \frac{\cancel{\text{CYC}^2}}{\text{SEC}^2} \text{ LBM} = \frac{\text{LBM}}{\cancel{\text{SEC}^2}} \frac{\text{IN}/\cancel{\text{SEC}^2}}{\text{IN}/\cancel{\text{SEC}^2}} = \text{LBF/IN} \checkmark$$

ASSUME: STIFFNESS OF ELEVATION BEARING AND SHAFT:

$K'' = \underline{10.0 \times 10^6 \text{ LB/IN.}}$

PREPARED BY _____ APPROVED BY _____ SUBMITTED BY _____

NATIONAL RADIO ASTRONOMY OBSERVATORY
POST OFFICE BOX 2
GREEN BANK, WEST VIRGINIA 24944
TELEPHONE ARBOVALE 456-2011

PROJECT: 300 FT. DIA. HOMOLOGY TELESCOPE
SUBJECT: DYNAMIC ANALYSIS

$$\frac{1}{K_x} = \frac{1}{K_x'} + \frac{1}{K''}$$

$$= \frac{10^{-6}}{0.795} + \frac{10^{-6}}{10}$$

$$= (1.259 + 0.100) \times 10^{-6}$$

$$= 1.359 \times 10^{-6}$$

$$K_x = \underline{7.36 \times 10^5 \text{ LBS/IN}}$$

(NOTE: 11.58×10^5 LBS/IN USED IN RUNS 5-6A)

FURTHER, FROM MODE 4, (TWISTING ABOUT Z-AXIS)

NATURAL FREQUENCY: $f = 3.76$ CPS

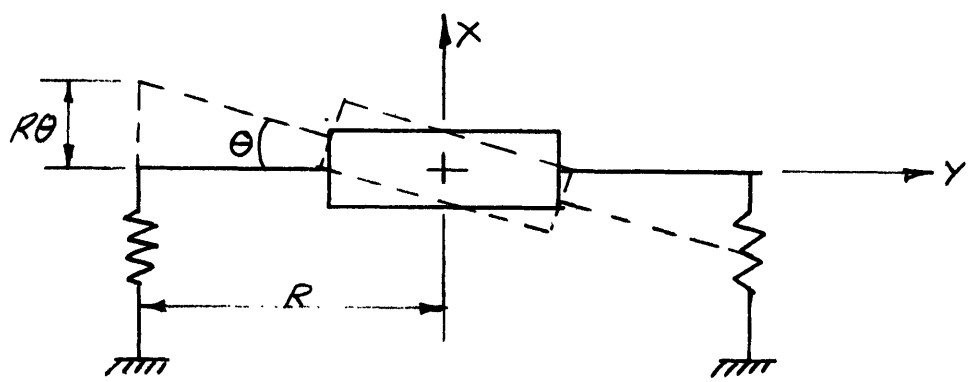

$$\Sigma M = I\ddot{\alpha}$$

$$-(2KR\theta)R = I_z\ddot{\theta}$$

$$I_z\ddot{\theta} + 2KR^2\theta = 0$$

$$\ddot{\theta} + \frac{2KR^2}{I_z}\theta = 0 \qquad \therefore\ f = \frac{1}{2\pi}\sqrt{\frac{2KR^2}{I_z}}$$

PREPARED BY _____ APPROVED BY _____ SUBMITTED BY _____

NATIONAL RADIO ASTRONOMY OBSERVATORY
POST OFFICE BOX 2
GREEN BANK, WEST VIRGINIA 24944
TELEPHONE ARBOVALE 456-2011

PROJECT: 300 FT. DIA. HOMOLOGY TELESCOPE

SUBJECT: DYNAMIC ANALYSIS

WE HAVE:

$$I_z = \frac{2.34 \times 10^6}{2.56 \times 10^6} \times 57.72 \times 10^8$$

$$= 52.8 \times 10^8 \text{ LBF-IN-SEC}^2$$

$$K_x' = \frac{4\pi^2 f^2 I_z}{2R^2} = 2\pi^2 \frac{f^2 I_z}{R^2}$$

$$= \frac{19.72 \times \overset{14.13}{\cancel{(3.76)}}^2 \times 52.8 \times 10^8}{(1.2 \times 10^3)^2}$$

$$= \underline{10.23 \times 10^5 \text{ LBF/IN}}$$

STIFFNESS OF ELEVATION BEARING

$$K'' = 10.0 \times 10^6 \text{ LB/IN}$$

$$\frac{1}{K_x} = \frac{1}{K_x'} + \frac{1}{K''}$$

$$= \frac{10^{-6}}{1.023} + \frac{10^{-6}}{10.0}$$

$$= (0.976 + 0.100) \times 10^{-6}$$

$$= 1.076 \times 10^{-6}$$

$$K_x = \underline{9.29 \times 10^5 \text{ LB/IN}}$$

(VERSUS 11.58×10^5 LB/IN USED IN RUNS 5-6A AND 7.36×10^5 LB/IN COMPUTED ABOVE ON THE BASIS OF MODE 1)

PREPARED BY _____ APPROVED BY _____ SUBMITTED BY _____

PROJECT: 300 FT. DIA. HOMOLOGY TELESCOPE

SUBJECT: DYNAMIC ANALYSIS

Y - DIRECTION

FROM MODE 2, (ROCKING IN Y- DIRECTION ABOUT POINT 50, ELEVATION DRIVE)

NATURAL FREQUENCY, $f = 2.62$ CPS

$$f = \frac{1}{2\pi}\sqrt{\frac{2K}{M}}$$

$$K_y' = (2\pi^2) f^2 M = 19.76 f^2 M$$

$$= 19.76 \times \cancel{(2.62)^2}\ 6.86 \times 6.06 \times 10^3$$

$$= 8.21 \times 10^5 \text{ LB/IN}$$

$$\frac{1}{K_y} = \frac{1}{K''} + \frac{1}{K_y'}$$

$$= \frac{10^{-6}}{0.821} + \frac{10^{-6}}{10.0}$$

$$= (1.218 + 0.100) \times 10^{-6}$$

$$= 1.318 \times 10^{-6}$$

$$K_y = \underline{7.58 \times 10^5 \text{ LB/IN}}$$

(NOTE: 7.04×10^5 LB/IN USED IN RUNS 5-617)

NATIONAL RADIO ASTRONOMY OBSERVATORY
POST OFFICE BOX 2
GREEN BANK, WEST VIRGINIA 24944
TELEPHONE ARBOVALE 456-2011

PROJECT: 300 FT. DIA. HOMOLOGY TELESCOPE

SUBJECT: DYNAMIC ANALYSIS

Z-DIRECTION:

FROM MODE 6,* (TRANSLATION IN Z-DIRECTION)

NATURAL FREQUENCY: 361 CPS

$$f = \frac{1}{2\pi}\sqrt{\frac{2K}{M}}$$

$$K_z' = 2\pi^2 f^2 M = 19.76\, f^2 M$$

$$= 19.76 \times (\cancel{3.61}\ 13.02)^2 \times 6.06 \times 10^3$$

$$= 15.58 \times 10^5 \text{ LB./IN.}$$

$$\frac{1}{K_z} = \frac{1}{K_z'} + \frac{1}{K''}$$

$$= \frac{10^{-6}}{1.558} + \frac{10^{-6}}{10.00}$$

$$= (0.642 + 0.100) \times 10^{-6}$$

$$= 0.742 \times 10^{-6}$$

$$K_z = 13.48 \times 10^5 \text{ LBS/IN.} \longleftarrow$$

(NOTE: 8.85×10^5 USED IN RUNS 5-6A)

*NO MODE SHAPE TABULATION WAS PROVIDED FOR THIS MODE.

PREPARED BY _____ APPROVED BY _____ SUBMITTED BY _____

NATIONAL RADIO ASTRONOMY OBSERVATORY
POST OFFICE BOX 2
GREEN BANK, WEST VIRGINIA 24944
TELEPHONE ARBOVALE 456-2011

PROJECT: 300 FT. DIA. HOMOLOGY TELESCOPE

SUBJECT: DYNAMIC ANALYSIS

	COMPUTED FROM DYNAMIC ANALYSIS OF S.G.&H REPORT	USED IN RUNS 5-6A
K_x	7.36×10^5 9.29×10^5 LB./IN.	11.58×10^5 LB./IN.
K_y	7.58×10^5 LB./IN.	7.04×10^5 LB./IN.
K_z	13.48×10^5 LB./IN.	8.85×10^5 LB./IN.

TABLE -10-

CONCENTRATED STIFFNESSES AT JOINTS 4 & 10

NATIONAL RADIO ASTRONOMY OBSERVATORY
POST OFFICE BOX 2
GREEN BANK, WEST VIRGINIA 24944
TELEPHONE ARBOVALE 456-2011

PROJECT: 300 FT. DIA. HOMOLOGY TELESCOPE

SUBJECT: REFLECTOR MODE SHAPES
REF: S G & H INC REPORT 30 APR 69 DYNAMIC ANALYSIS

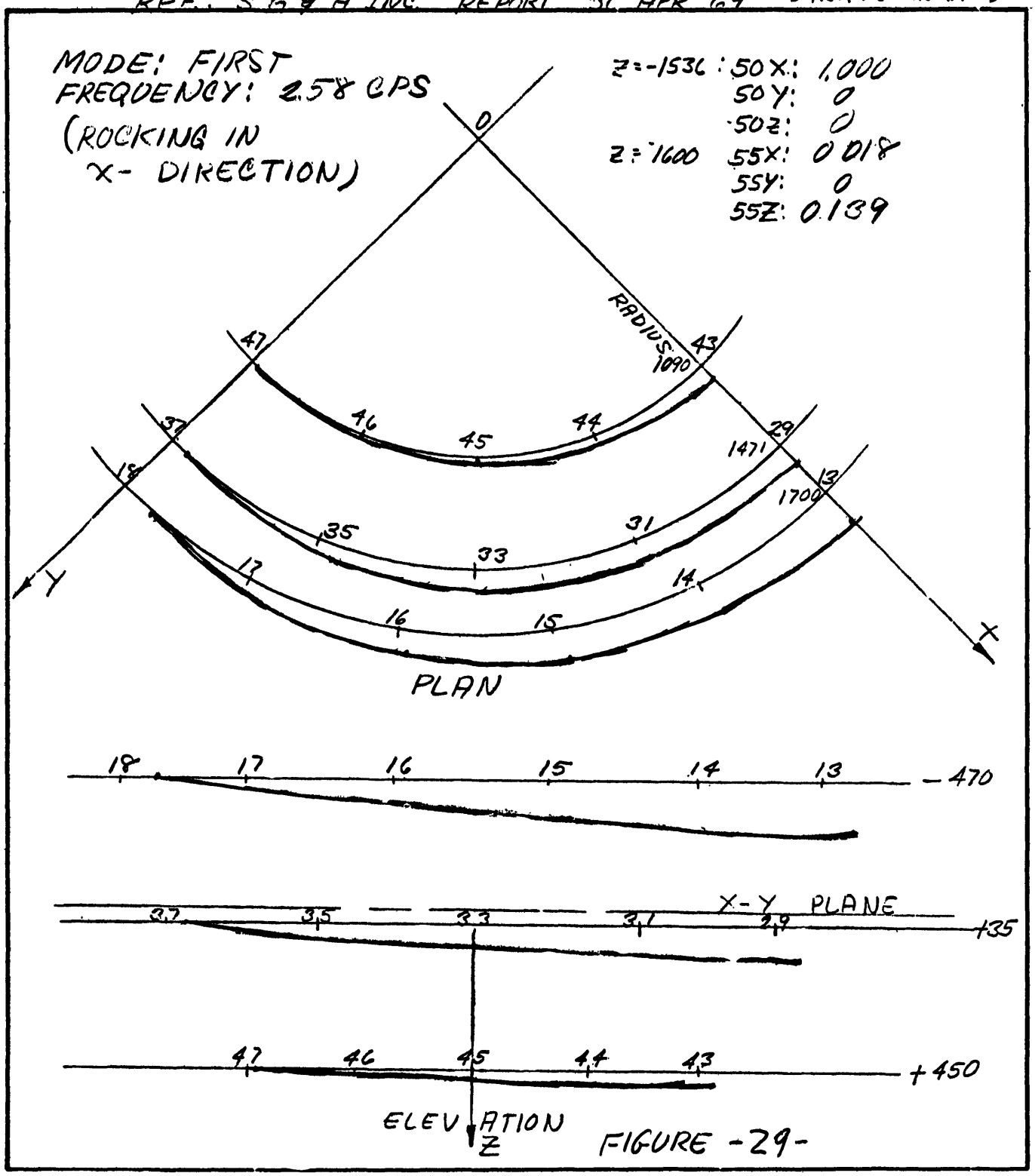

FIGURE -29-

PREPARED BY _____ APPROVED BY _____ SUBMITTED BY _____

NATIONAL RADIO ASTRONOMY OBSERVATORY
POST OFFICE BOX 2
GREEN BANK, WEST VIRGINIA 24944
TELEPHONE ARBOVALE 456-2011

PROJECT: 300 FT. DIA. HOMOLOGY TELESCOPE

SUBJECT: REFLECTOR MODE SHAPES
REF: S.G.&H. INC. REPORT 30 APR 69, DYNAMIC ANALYSIS

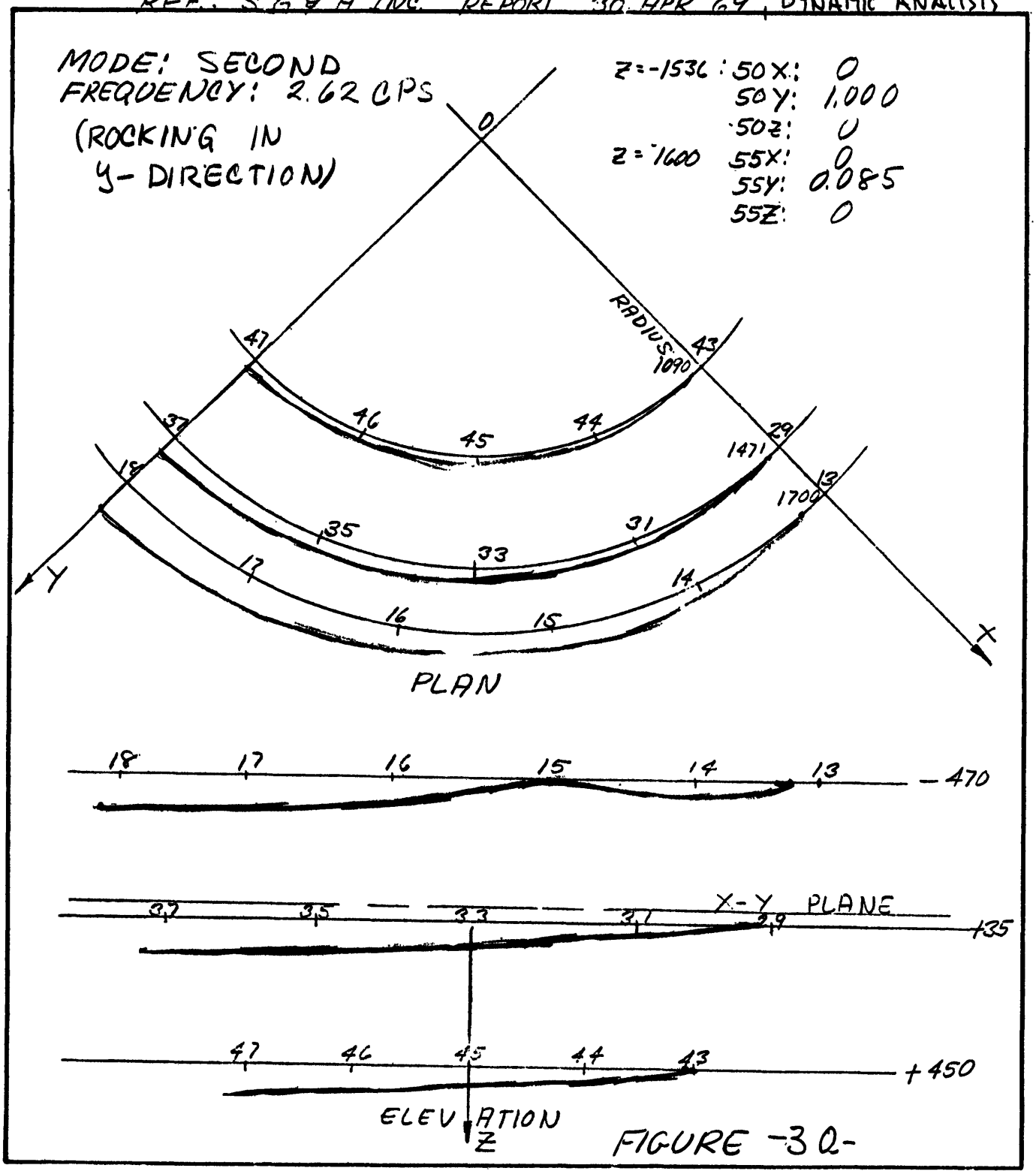

FIGURE -3a-

PREPARED BY _____ APPROVED BY _____ SUBMITTED BY _____

NATIONAL RADIO ASTRONOMY OBSERVATORY
POST OFFICE BOX 2
GREEN BANK, WEST VIRGINIA 24944
TELEPHONE ARBOVALE 456-2011

PROJECT: 300 FT. DIA. HOMOLOGY TELESCOPE

SUBJECT: REFLECTOR MODE SHAPES
REF: S.G.&H. INC. REPORT 30 APR 69, DYNAMIC ANALYSIS

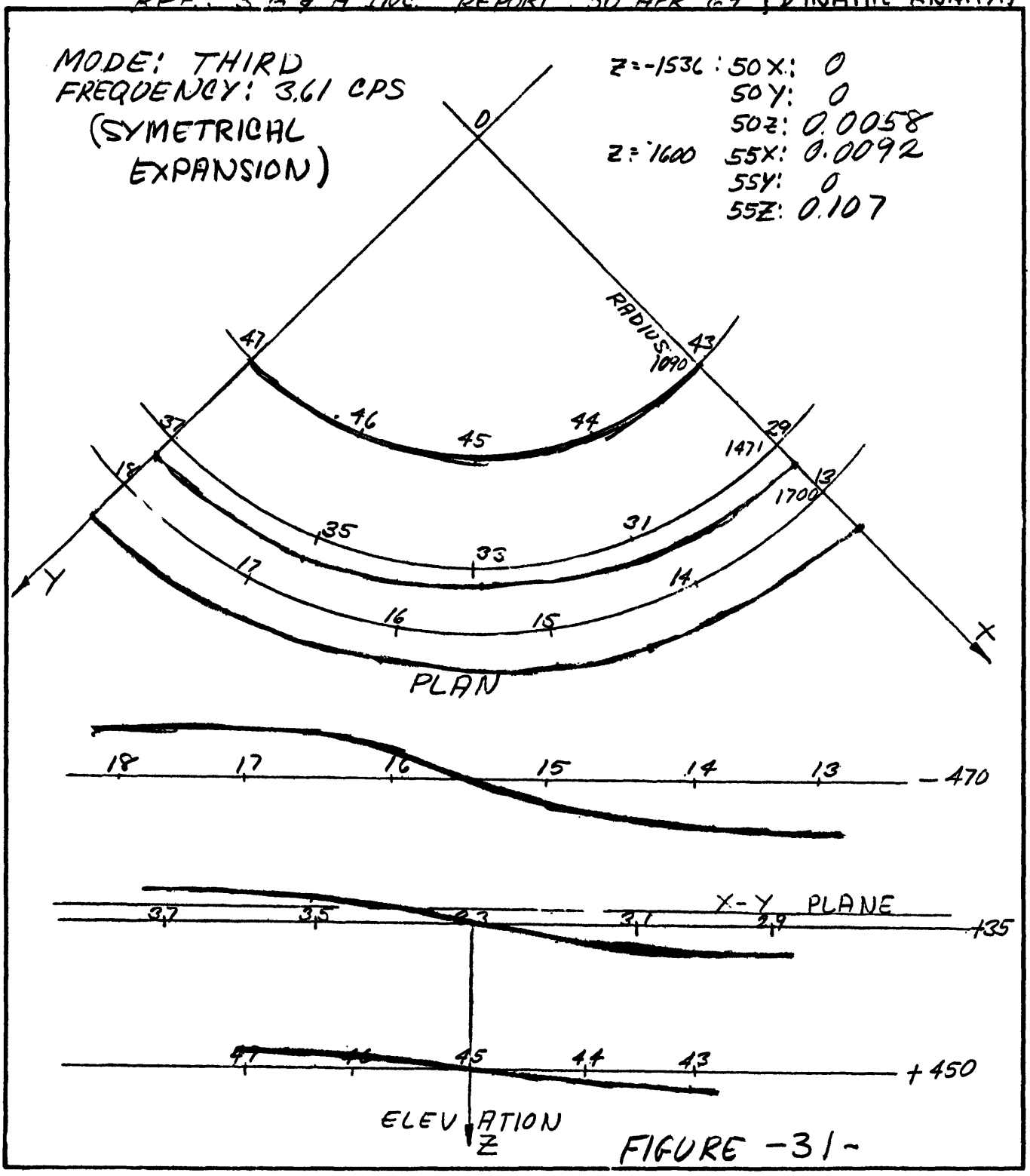

FIGURE -31-

PREPARED BY _____ APPROVED BY _____ SUBMITTED BY _____

NATIONAL RADIO ASTRONOMY OBSERVATORY
POST OFFICE BOX 2
GREEN BANK, WEST VIRGINIA 24944
TELEPHONE ARBOVALE 456-3011

PROJECT: 300 FT. DIA. HOMOLOGY TELESCOPE

SUBJECT: REFLECTOR MODE SHAPES
REF: S G & H INC. REPORT 3C APR 69, DYNAMIC ANALYSIS

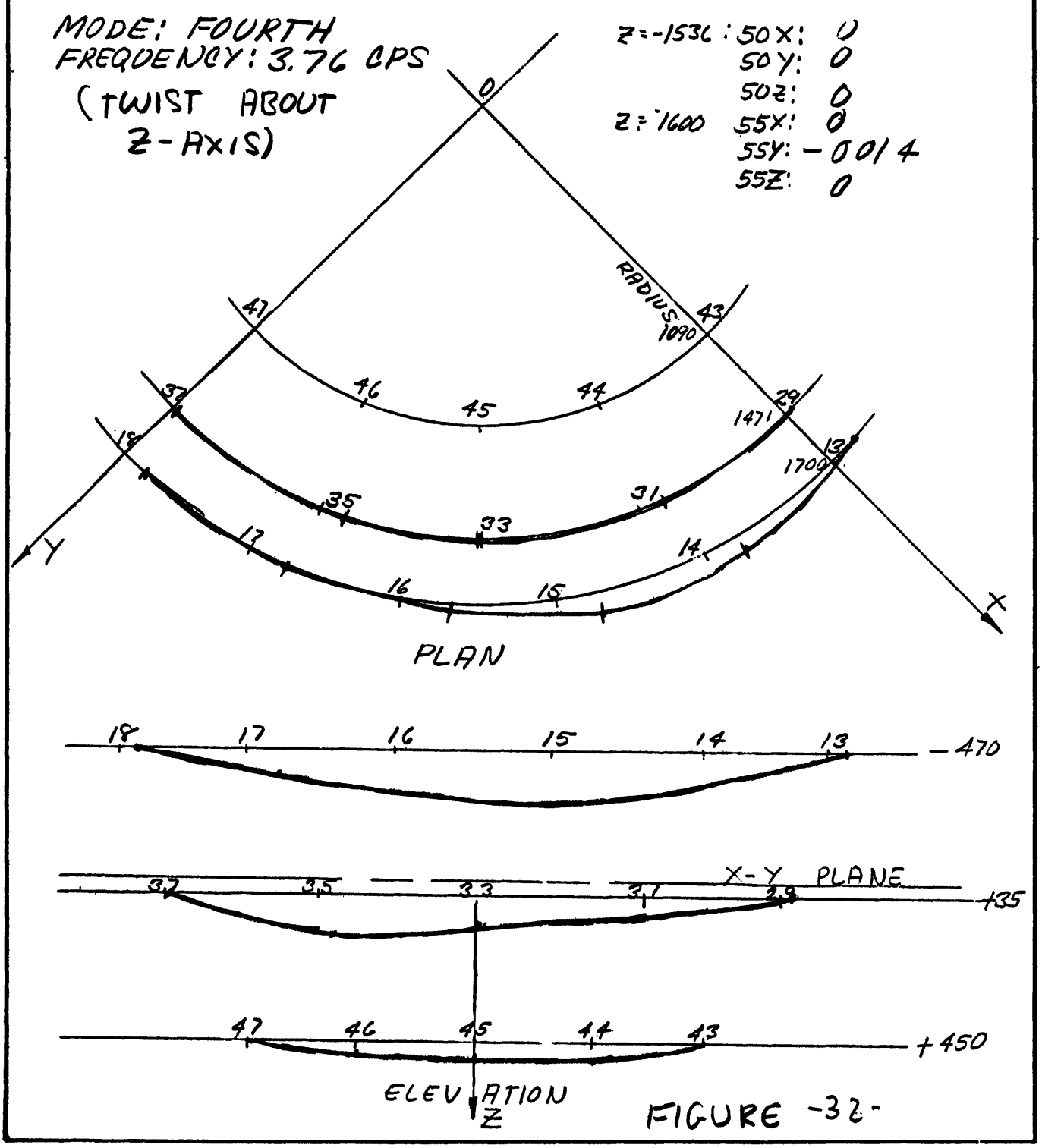

FIGURE -32-

PREPARED BY _____ APPROVED BY _____ SUBMITTED BY _____

NATIONAL RADIO ASTRONOMY OBSERVATORY
POST OFFICE BOX 2
GREEN BANK, WEST VIRGINIA 24944
TELEPHONE ARBOVALE 456-2011

PROJECT: 300 FT DIA HOMOLOGY TELESCOPE

SUBJECT: REFLECTOR MODE SHAPES
REF: S S & H INC. REPORT 30 APR 69, DYNAMIC ANALYSIS

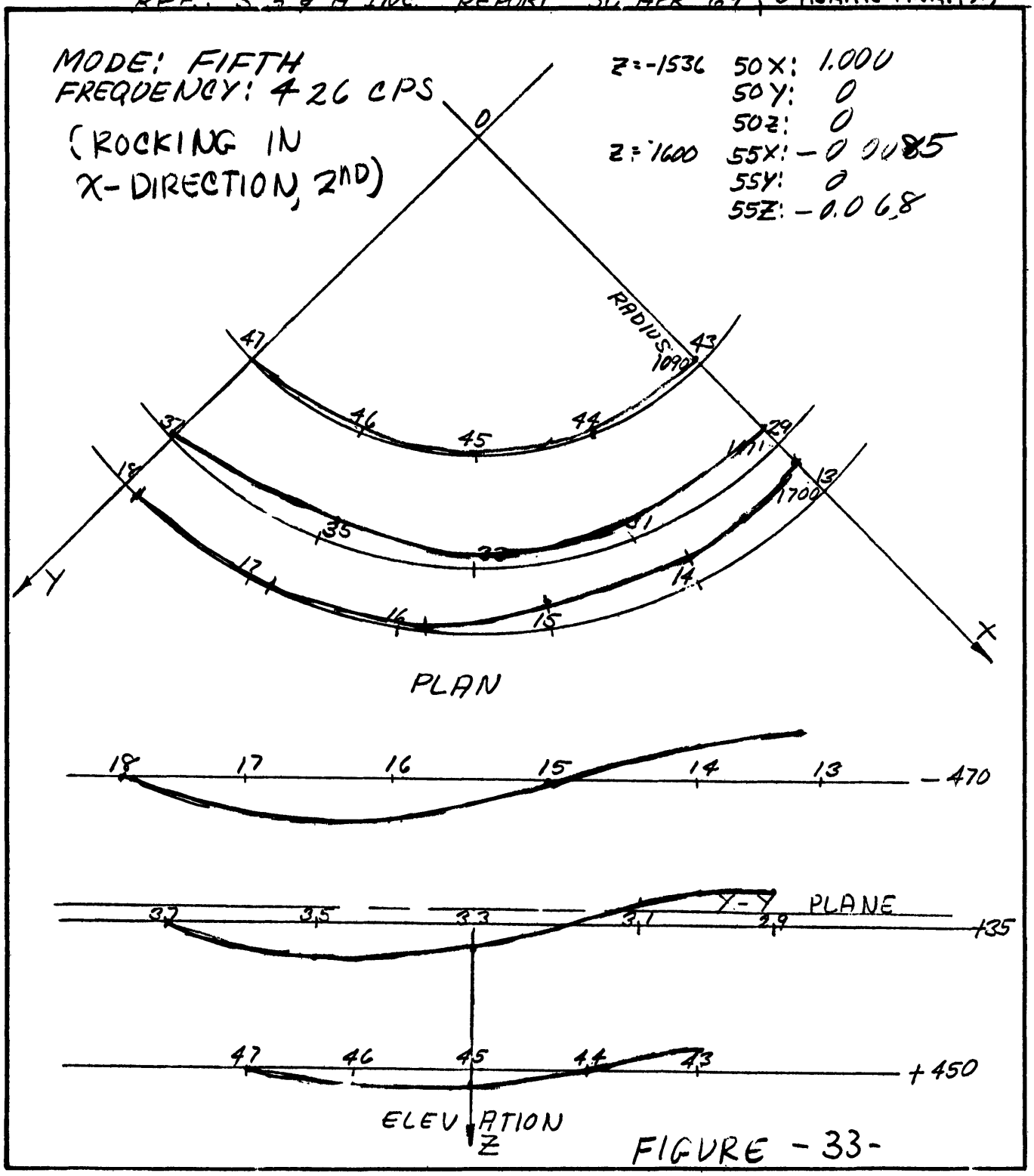

FIGURE -33-

PREPARED BY _____ APPROVED BY _____ SUBMITTED BY _____