November 30, 1971

Report No. 42

DESIGN OF THE FEED SUPPORT LEGS FOR THE 65-METER HOMOLOGY TELESCOPE

Woon-Yin Wong

INTRODUCTION

In order to achieve about a one arc second pointing error under 18 mile/hour lateral wind during observation, the feed support legs of the 65-meter homology telescope requires essentially a deformation governed design (Fig. 1). This structure should also fulfill the survival condition of a wind load of 80 mph, the same as that for the dish back-up structure. With reference to the first requirement, the dimensions of the feed leg structure are larger than those recommended by SVH in Report 22, producing a blockage of 6.4% of telescope aperture.

The cabin is 12' deep and can hold up to 10 tons of front end instruments. An opening of 10' x 10' is provided for a fast change of instruments at the prime focus. This is to be done by pointing the telescope at horizontal position to the service tower, with the floor of the instrument cabin level with that of the service tower. The secondary mirror can be either hoisted up from the front using the feed legs as a boom, or installed from a platform of the service tower.

The legs are guyed at three points in the center portion for increased lateral stiffness. The portion behind the surface plates is a single pipe instead of a built-up structure in order to minimize the clearance problem between panel structures. The joint between the built-up portion and the single tubular section is braced in four directions to the nearest surface

points. This bracing produced an insignificant effect on the RMS of the surface deformation of the dish.

Tubular members have been chosed for small shape factor under wind forces. COR-TEN steel with a specified yield stress of 50 ksi is used as in the back-up structure, for the purpose of being consistently with those of the dish structure.

Temperature deformation is also investigated. For a one degree Fahrenheit RMS temperature deviation from the mean of temperature, this feed supporting structure produced a pointing error of 2.04 second of arc RMS.

The lowest natural frequency of the system, by using mean value of frame and truss analysis, is 4.2 cps.

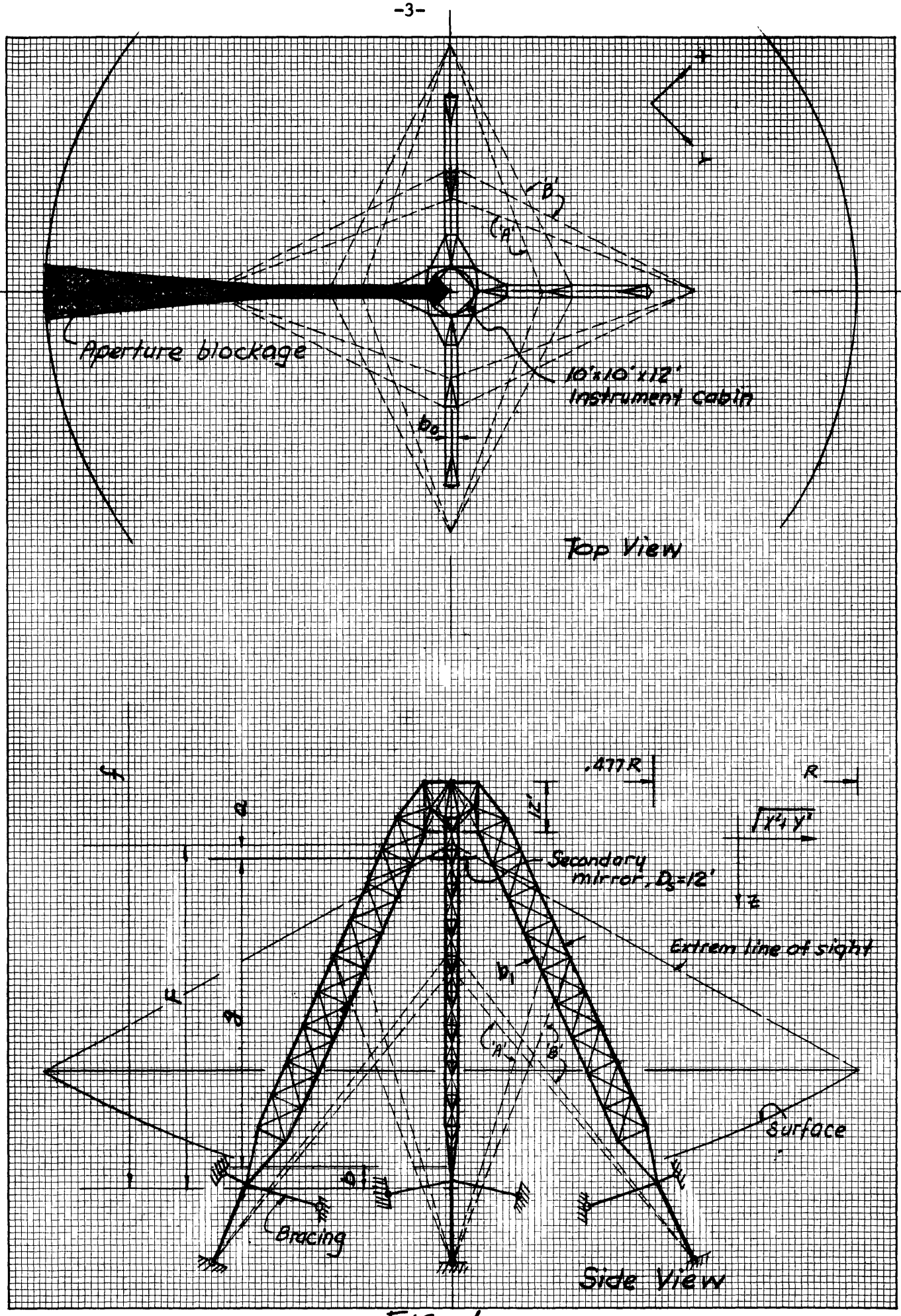
Aperture blockage
10'x10'x12'
Instrument cabin
Top View
.477R
R
Secondary
mirror, D_S=12'
Extrem line of sight
Surface
Bracing
Side View

FIG. 1

1"=400"

SUMMARY

Performance

Survival wind load	80 mph
Pointing error under 18 mph wind load	1.08 arc-sec
RMS pointing error with 1 deg. F temp. diff.	2.04 arc-sec
Lowest natural frequency	4.2 cps
Aperture blockage	6.4%
Gain loss (expressed as an equivalent surface rms)	Wind - 0.17×10^{-3} in.
	Temp. - 0.73×10^{-3} in.

Optics

Focus and diameter ratio	F/D	0.426
Focus length, prime focus system	F	1090.56 in.
Effective focus length, Cassegrain system	f	17,223.529 in.
Magnification	M	15.793
Distance, prime focus to vertex of Cassegrain mirror	a	61.367 in.
Distance, secondary focus to apex of Cassegrain mirror	g	969.193 in.
Height of secondary focus above the dish	b	60.000 in.
Diameter of Cassegrain mirror	d	12 ft.

Dimensions and Weight

Cabin		10' x 10' x 12'
Width of leg	b_o	40.00 in.
Depth of leg	b_1	97.98 in.
No. of segments		9
Weight (portion from surface up)		33,324 lb.
		16.7 ton
Capacity of instrument cabin		10 ton

POINTING ERROR OF THE FEED SUPPORT

Since observations at the short wave-lengths will be performed with Cassegrain optics, the demanded accuracy is governed by the magnitude of the angular rotation and the lateral translation of the secondary mirror. Studies on this subject have been done by several authors (1) (2). Ruze's treatment will be employed in this analysis.

In order to maintain the same notations as shown in Fig. 1, Ruze's formula will be re-stated as follows:

a) Beam movement in radian due to lateral translation, ΔX, of the secondary mirror:

$$\beta = \frac{\Delta X}{F} BDF - \frac{\Delta X}{f} BDf \qquad (1)$$

With reference to the tabulated values in the SUMMARY section for F and f, assuming the illumination function is $I(r) = 1 - .9r^2$, one could obtain BDF = 0.84 with F/D = 0.426; BDf = 1.00 with f/D = 6.725. Substituting all these values into eq (1), one derives the following relation:

$$\beta = 0.786 \frac{\Delta X}{F} \qquad (2)$$

b) The beam movement α in radians due to the rotation of the secondary mirror ϕ is given by:

$$\alpha = \phi \times \frac{a}{F} (BDF + BDf) \qquad (3)$$

Similarly, one again can derive the following relation for the 65-meter telescope:

$$\alpha = 0.104\phi \qquad (4)$$

c) The pointing error, consequently, is:

$$PE = \beta - \alpha \qquad (5)$$

NUMERICAL RESULTS FOR THE WIND LOAD OF 18 MPH DURING OBSERVATION

From the structural analysis of the feed supporting structure, the lateral translation of the mirror $\Delta X = .0104$ in., and the rotation $\phi = 4.46$ arc-sec. The beam shifts due to these deformations are, by substituting these values into eq. (2) and (4):

$$\beta = 0.786 \times \frac{.0104}{1090.56} \times 2.06 \times 10^5 = 1.54 \text{ arc-sec.}$$

$$\alpha = 0.104 \times 4.46 \qquad = 0.46 \text{ arc-sec.}$$

and the pointing error is, by subtracting these two values

$$PE = 1.54 - 0.46 = 1.08 \text{ arc-sec.}$$

NUMERICAL RESULT FOR 1° F TEMPERATURE DIFFERENCE ON ONE LEG

The temperature load is applied on the structure as $+1^{\circ}$ F on two legs, and -1° F on another two. This induced a lateral translation of the mirror .0127 inch, and a rotation of 9.63 arc-sec. Substituting these values into (2) and (4), one can have a peak pointing error, due to one degree temperature difference from the mean, of 2.89 arc-sec. Dividing this value by $\sqrt{2}$, one has a rms value of 2.04 second of arc for a random distribution.

It should be noticed that the pointing error in this case is the sum of the two due to different form of deformation.

GAIN LOSS

The gain losses are derived from the study of Zarghamee (3). Lateral displacement and angular tilt loss coefficients are extracted from Table 2 for a tapering law $1-r^2$ expressed as an equivalent surface error rms we obtain:

$$\varepsilon_{lateral} = 0.016\ \Delta X$$

$$\varepsilon_{tilt} = 0.0016 \cdot f \cdot \Delta\alpha$$

where ΔX is the lateral displacement

$\Delta\alpha$ is the secondary mirror tilt in radians

f is the focal distance

These expressions are somewhat conservative since they apply to an optical system with a magnification of 10 (losses decrease with increasing magnification). The gain degradation for axial displacements of the secondary mirror is approximately computed as recommended by Ruze by using his equation (5) with the axial loss factor for very large f/D and 0.9 tapering.

We obtain

$$\varepsilon_{axial} = 0.154\ \Delta Z$$

where ΔZ is the axial displacement.

STRUCTURAL DATA

The feed supporting structure is being analyzed in only one quadrant due to its symmetrical configuration in X-Z and Y-Z planes. Joint coordinates and member incidences are listed in Table 2, and also are illustrated in Fig. 3. All dimensions are expressed in inches and forces in pounds if not specified. The holding condition to simulate the symmetrical character is listed in Table 1.

Modes	Mode / Point	SS X	SS Y	SS Z	AS X	AS Y	AS Z	SA X	SA Y	SA Z	AA X	AA Y	AA Z
SS - Symmetrical to both X-axis and Y-axis	2	1	1	1	1	1	1	1	0	1	1	0	1
	3	1	1	1	0	1	1	1	1	1	0	1	1
	4	0	1	0	0	1	0	1	0	1	1	0	1
AS - Asymmetry with respect to Y-axis	5	0	1	0	0	1	0	1	0	1	1	0	1
	6	1	0	0	0	1	1	1	0	0	0	1	1
	7	1	0	0	0	1	1	1	0	0	0	1	1
SA - Asymmetry with respect to X-axis	8	1	1	1	1	1	1	1	0	1	1	0	1
	9	1	1	1	0	1	1	1	1	1	0	1	1
	40	1	1	1	1	1	1	1	1	1	1	1	1
AA - Anti-symmetry	41	1	1	1	1	1	1	1	1	1	1	1	1
	42	1	1	1	1	1	1	1	1	1	1	1	1

TABLE 1

Constraints for supporting points, 0-free, 1-fixed

The structural analysis considered only in SS and AS modes, representing zenith and horizontal positions. For dynamic analysis, however, four modes are being studied for the lowest frequency.

The demand for the structural stability is that the combined stress ratio

$$\frac{S_m}{S_\Lambda} + \frac{.85}{1-\frac{S_m}{S_e}} \times \frac{S_g}{.66S_y} < 1 \qquad (6)$$

where

S_m = Max. $\{S_{zw}, S_t\}$

S_{zw} = Survival wind in stow position = $|S_1+S_2+S_5|+|S_6|+|(WF-1) \times S_3|$

S_t = Tilted position = $\sqrt{(S_1+S_2)^2+(S_3+S_4)^2}+|S_5|+|S_6|$

S_1 = Dead load in zenith position

S_2 = Instrument load in zenith position, 10 tons per 8 structural pts

S_3 = Dead load in horizontal position

S_4 = Instrument load in horizontal position, 10 tons per 8 structural pts

S_5 = Stress due to tensil forces from cables, 7000 lbs each for cables

S_6 = Max. force on feed support from telescope design: 22,300 lbs

WF = Value weight factor to combine the dead load of the structure with the survival wind load of 80 mph. This is derived from the assumption that each member has the same wall thickness of 0.156", and the wind force apply to every member disregarding the possible shadowing effects. Value used in this analysis equals 1.8.

S_Λ = Axial stress permitted if axial force alone existed

S_e = Euler stress = $\frac{149,000,000}{\Lambda^2}$ psi

S_g = Bending stress of the extreme fibre due to its own dead weight

S_y = Specified yield stress: 50 ksi

Λ = Kl/r, slenderness ratio

K = Effective length factor

l = Length of members

r = Radius of gyration

The design data and analylical results are listed in Table 3. Member size is selected from tubular COR-TEN steel table. The stresses of the six loading conditions as well as the stress ratio are also listed. The analysis is performed in STRUDL. The structure is analyzed in truss model. Joint deformations between a truss model and a frame model is comparable.

DYNAMICAL BEHAVIOR

The structure has a lowest natural frequency of 4.2 cps, when the structure is oscillating around the Z-axis. One must note that this is not the lowest mode for the back-up structure.

The cross-section of the guy cables are 0.5 sq. in. In order to maintain a 2.5 cps vibration to the cable, it would be necessary to stress the cable to 26 ksi. This is too high a stress and a better alternative is to maintain a 14 ksi stress in the cable, which produces only a 10% loss of effective elasticity. In this case the lowest natural frequency of the cable itself is 1.7 cps. It is acceptable since the mass of the cable is small compared with that of the whole telescope structure.

Again the feed legs structure is being analyzed in both truss and frame models. The lowest frequency in truss analysis yields 4.6 cps, whereas in frame analysis, it yields 3.9 cps. Taking the average as the representative natural frequency of the telescope, one obtains 4.2 cps.

APERTURE BLOCKAGE

The shaded area in Fig. 1 shows the shadow cast by one feed leg. This shadow can be considered the sum of A_1, the shadow of the subreflector; A_2, the shadow of the feed leg, with width b_o = 40.5 inches; A_3, the fan shape area caused by the diverging spherical wave from the focal point; and

A_4, the shadow of the cables on the surface.

With the geometry of the present design, eq. (15) of Report 22 by SVH has to be adjusted to

$$\alpha(\text{rad}) = 0.670\ b_o/h + 0.423 \times 10^{-3} \times b_o.$$

Also, by using the same illumination function as suggested in the same report, $I(r) = 1 - .776\ r^2$, one could derive the quartered effective aperture, A_o:

$$A_o = \frac{\pi}{2} \int_o^1 I(r) r dr = .4807$$

shadow of subreflector, A_1:

$$A_1 = \frac{\pi}{2} \int_o^{12/213} I(r) r dr = .0025$$

shadow of feed leg, A_2:

$$A_2 = \int_{12/213}^1 I(r)\ \frac{b_o}{R}\, dr = .0217$$

fan shaped area, A_3, which is approximated with straight line:

$$A_3 = \int_{.477}^1 I(r)\ (\alpha - b_o/R)\ \frac{r - .477}{1 - .477}\, r dr = .0110$$

and finally, the shadow of the cables, A_4, with the measured length above the surface equals 2280"; diameter equals .8":

$$A_4 = \frac{2280 \times .8}{R^2} = .0011 \quad .$$

The weighted aperture blockage:

$$f_s = \frac{A_1 + A_2 + A_3 + A_4}{A_o} = 7.5\%$$

when it is considered completely opaque.

For considering the opacity equals .83, the aperture blockage becomes:

$$f_s = \frac{A_1 + (A_2 + A_3) \times .83 + A_4}{A_o} = 6.4\%$$

For the sake of comparison, the following table lists the blockage of various telescopes:

Antenna Diameter (ft)	Spars (%)	Randome (%)	Total (%)
JPL 210	6.55	---	6.55
Rosman 85	18.37	---	18.37
Proposed NEROC 440	1.11	8.6	9.71
Proposed NRAO 213	6.4	---	6.4

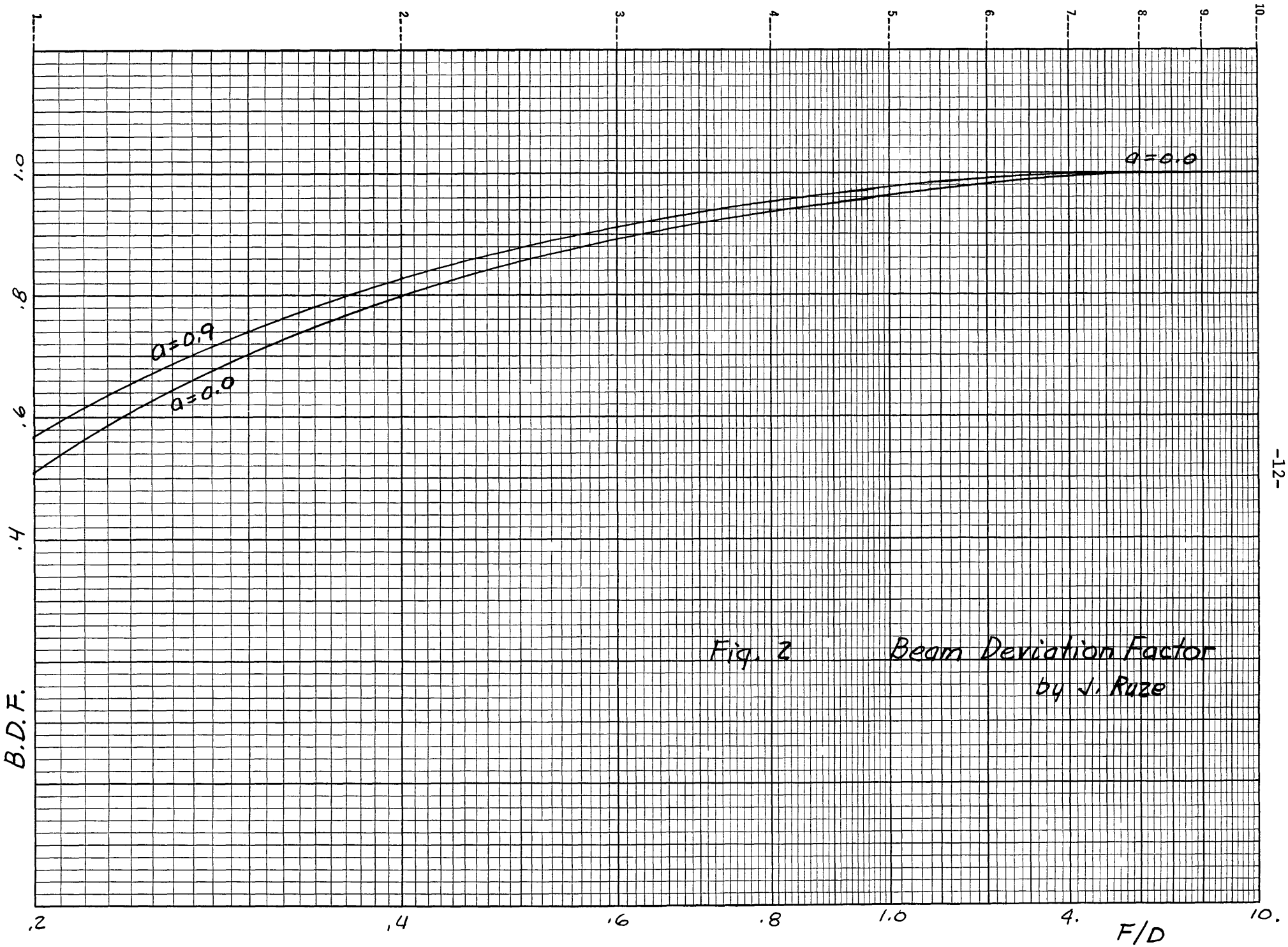

Fig. 2 Beam Deviation Factor
by J. Ruze

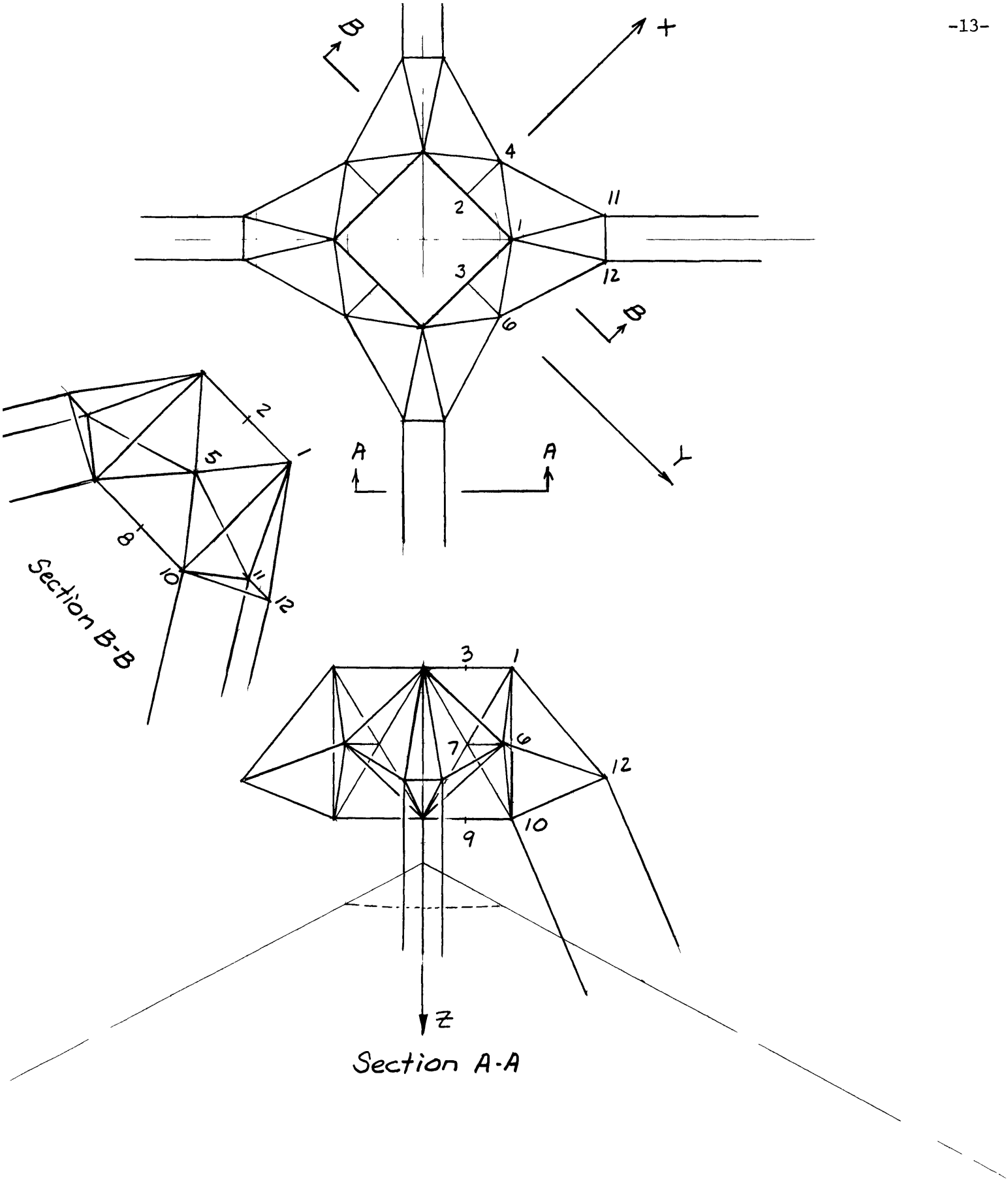

FIGURE 3 - Cabin and Feed-Support

1"=10'

May 25, 1971

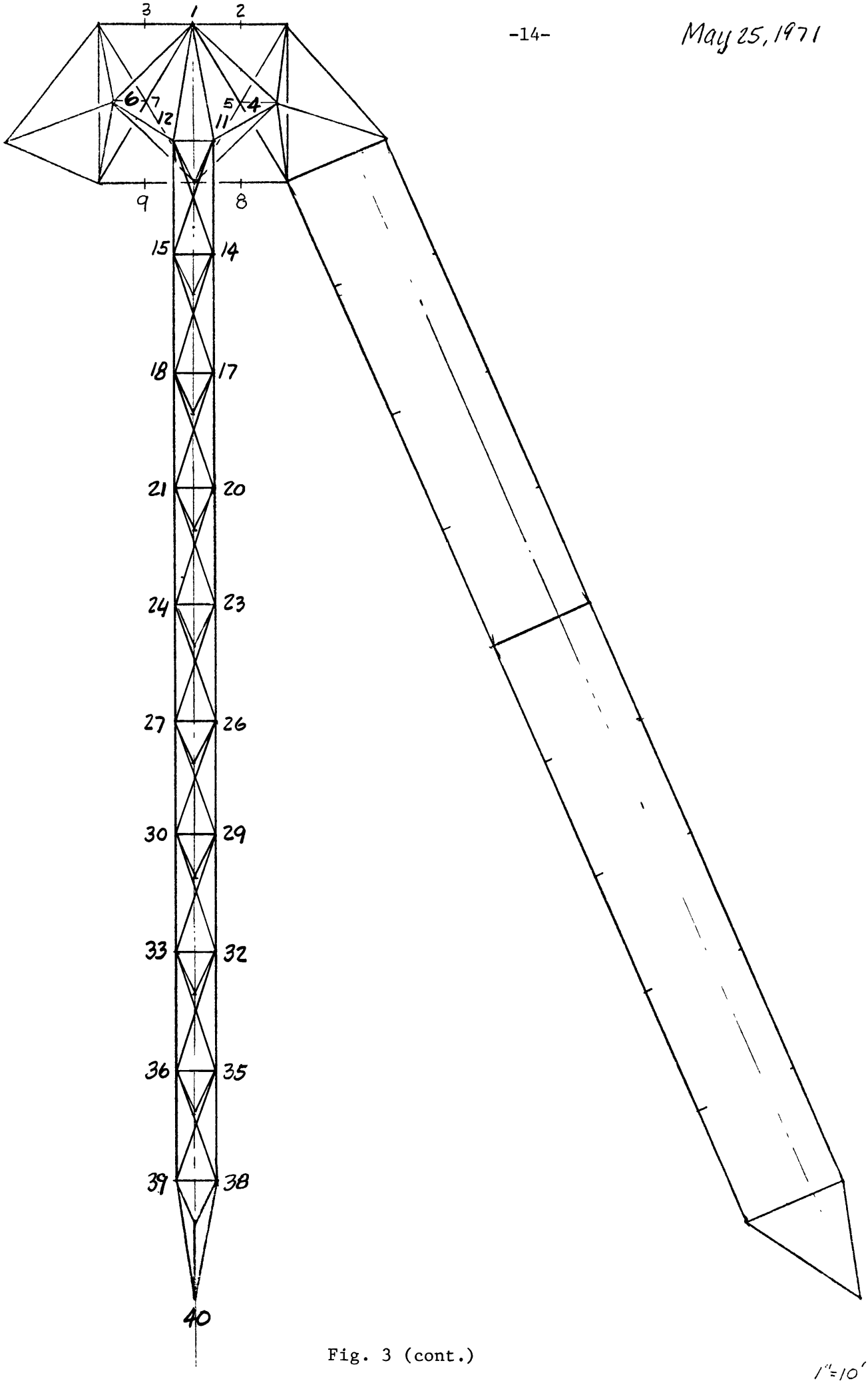

Fig. 3 (cont.)

1" = 10'

May 25, 1971

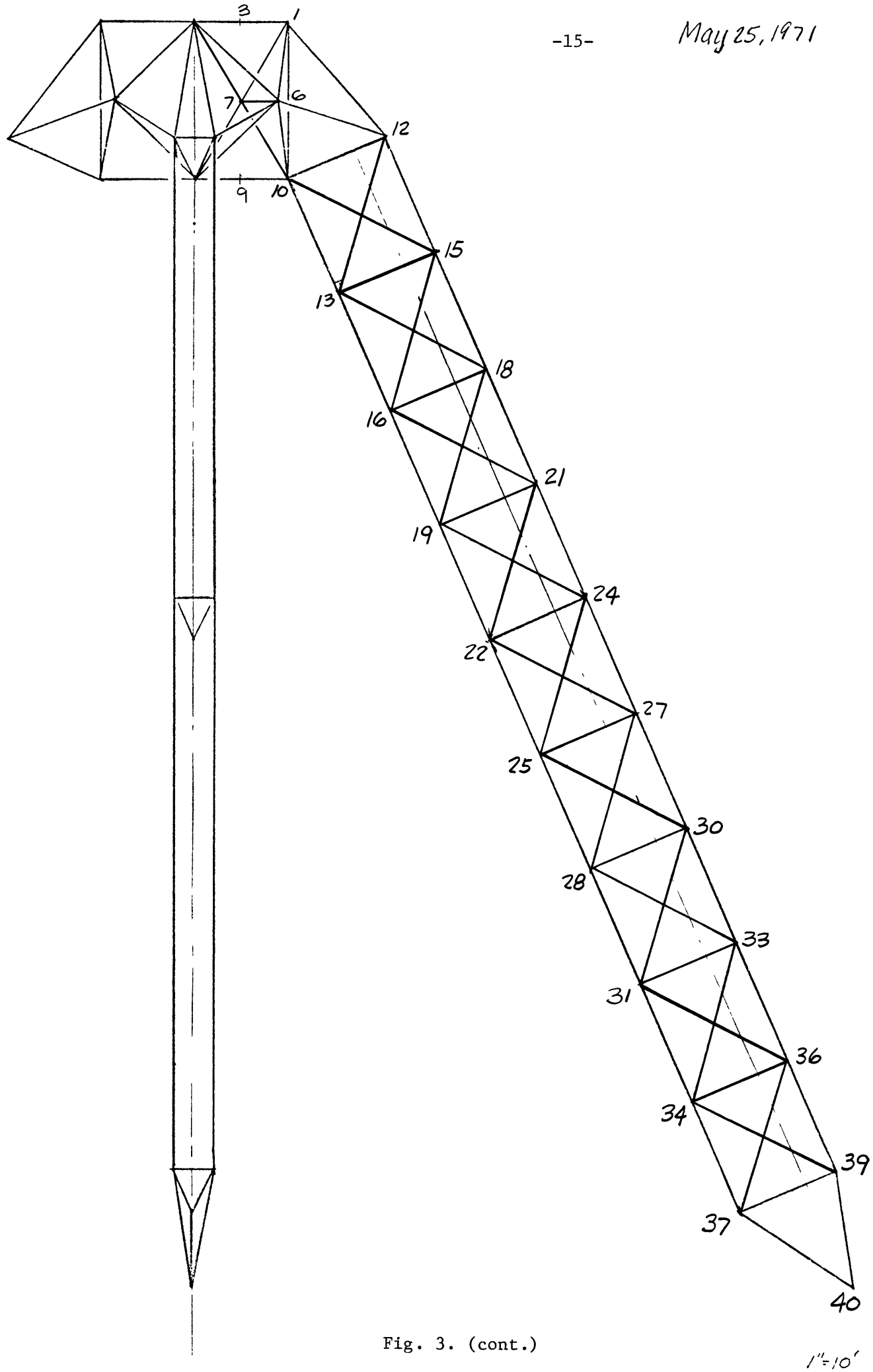

Fig. 3. (cont.)

1"=10'

JOINT COORDINATES----------/

JOINT	X	Y	Z	CONDITION
1	60.000	60.000	-1280.160	
2	60.000	0.0	-1280.160	SUPPORT
3	0.0	60.000	-1280.160	SUPPORT
4	108.046	0.0	-1208.160	SUPPORT
5	60.000	0.0	-1208.160	SUPPORT
6	0.0	108.046	-1208.160	SUPPORT
7	0.0	60.000	-1208.160	SUPPORT
8	60.000	0.0	-1136.160	SUPPORT
9	0.0	60.000	-1136.160	SUPPORT
10	60.000	60.000	-1136.160	
11	137.811	109.527	-1174.795	
12	109.527	137.811	-1174.795	
13	93.461	93.461	-1025.882	
14	171.272	142.987	-1064.519	
15	142.987	171.272	-1064.519	
16	126.922	126.922	-915.606	
17	204.733	176.448	-954.243	
18	176.448	204.733	-954.243	
19	160.383	160.383	-805.330	
20	233.194	209.909	-843.967	
21	209.909	233.194	-843.967	
22	193.844	193.844	-695.054	
23	271.654	243.370	-733.691	
24	243.370	271.654	-733.691	
25	227.305	227.305	-584.778	
26	305.115	276.831	-623.415	
27	276.831	305.115	-623.415	
28	260.765	260.765	-474.502	
29	338.576	310.291	-513.139	
30	310.291	338.576	-513.139	
31	294.226	294.226	-364.227	
32	372.037	343.752	-402.864	
33	343.752	372.037	-402.864	
34	327.687	327.687	-253.951	
35	405.497	377.213	-292.587	
36	377.213	405.497	-292.587	
37	361.148	361.148	-143.675	
38	438.958	410.674	-182.312	
39	410.674	438.958	-182.312	
40	437.978	437.978	-56.114	SUPPORT
41	538.102	-538.102	230.000	SUPPORT
42	-538.102	538.102	230.000	SUPPORT

TABLE 2 - COORDINATES

MEMBER			AREA	R.G.	LENGTH	L/R	1	2	3	4	5	6	RATIO
1	1	2	2.515	1.369	60.00	35.	0.25	-0.45	-0.69	-1.01	2.80	1.19	0.26
2	1	3	2.515	1.369	60.00	35.	0.25	-0.45	0.0	0.0	2.80	1.19	0.19
3	1	10	2.515	1.369	144.00	84.	-0.25	-0.01	1.17	2.07	-1.79	0.35	0.28
4	8	10	2.515	1.369	60.00	35.	-0.56	0.09	1.23	2.29	4.60	-0.39	0.39
5	9	10	2.515	1.369	60.00	35.	-0.56	0.09	0.0	0.0	4.60	-0.39	0.25
6	1	5	1.439	0.928	93.72	81.	-0.20	-0.08	0.80	1.49	-1.00	-0.93	0.20
7	1	7	1.439	0.928	93.72	81.	-0.20	-0.08	-1.41	-2.90	-1.00	-0.93	0.29
8	5	10	1.439	0.928	93.72	81.	-0.23	-0.08	0.80	1.49	-1.86	1.67	0.27
9	7	10	1.439	0.928	93.72	81.	-0.23	-0.08	1.45	2.90	-1.86	1.67	0.36
10	1	4	1.439	0.928	105.32	91.	0.04	-0.13	-0.14	-0.42	-1.52	-1.05	0.19
11	1	6	1.439	0.928	105.32	91.	0.04	-0.13	-0.42	-1.85	-1.52	-1.05	0.28
12	1	11	1.516	1.149	140.03	97.	0.32	-0.89	-1.47	-2.44	4.26	1.43	0.66
13	1	12	1.516	1.149	140.03	97.	0.32	-0.89	-0.05	1.20	4.26	1.43	0.48
14	4	10	1.439	0.928	105.32	91.	-0.03	-0.02	-0.09	-0.06	-0.28	1.43	0.12
15	4	11	0.960	0.641	118.30	148.	0.02	-0.40	-0.22	-1.31	1.78	0.99	0.70
16	6	10	1.439	0.928	105.32	91.	-0.03	-0.02	1.34	1.88	-0.28	1.43	0.29
17	6	12	0.960	0.641	118.30	148.	0.02	-0.40	-0.79	-0.02	1.78	0.99	0.59
18	10	11	0.960	0.641	100.00	125.	-0.38	0.76	0.30	2.01	-4.29	-1.43	0.95
19	10	12	0.960	0.641	100.00	125.	-0.38	0.76	0.16	-0.81	-4.29	-1.43	0.73
20	11	12	0.960	0.641	40.00	50.	-0.03	-0.03	-0.06	-0.22	0.10	0.24	0.04
21	4	5	0.103	0.220	48.05	175.	0.0	0.0	0.38	0.0	0.0	0.0	0.09
22	6	7	0.103	0.220	48.05	175.	0.0	0.0	0.0	0.0	0.0	0.0	0.01
23	10	13	3.290	1.770	120.00	54.	-0.42	-0.68	2.10	3.49	-2.72	1.89	0.67
24	11	14	3.290	1.770	120.00	54.	0.03	-0.34	-0.83	-1.07	1.41	0.60	0.26
25	12	15	3.290	1.770	120.00	54.	0.03	-0.34	-0.01	0.39	1.41	0.60	0.17
26	14	15	0.291	0.262	40.00	122.	0.17	0.61	0.78	0.29	-1.39	-1.17	0.40
27	13	14	0.720	0.575	100.00	139.	0.22	0.30	-0.43	-1.43	1.21	-0.78	0.55
28	13	15	0.720	0.575	100.00	139.	0.22	0.30	-1.18	-1.43	1.21	-0.78	0.65
29	11	15	1.074	0.840	126.49	120.	0.04	-0.28	0.06	-0.74	1.20	0.50	0.26
30	12	14	1.074	0.840	126.49	120.	0.04	-0.28	-0.74	0.14	1.20	0.50	0.25
31	10	14	1.394	1.061	156.21	118.	-0.45	-0.09	0.24	1.63	-3.21	0.46	0.57
32	10	15	1.394	1.061	156.21	118.	-0.45	-0.09	0.53	1.10	-3.21	0.46	0.55
33	11	13	1.394	1.061	156.21	118.	0.15	-0.08	0.46	0.03	1.17	0.10	0.19
34	12	13	1.394	1.061	156.21	118.	0.15	-0.08	0.29	0.27	1.17	0.10	0.20
35	13	16	3.290	1.770	120.00	54.	-0.22	-0.63	2.13	2.94	-0.56	1.61	0.48
36	14	17	3.290	1.770	120.00	54.	-0.18	-0.34	-0.85	-0.22	0.01	0.70	0.13
37	15	18	3.290	1.770	120.00	54.	-0.18	-0.34	0.17	0.34	0.01	0.70	0.10
38	17	18	0.291	0.262	40.00	122.	0.49	0.58	0.56	-0.39	1.02	-1.27	0.39
39	16	17	0.720	0.575	100.00	139.	0.11	0.36	-0.38	-0.90	-0.21	-0.83	0.34

TABLE 3 - RESULTS OF STRUCTURAL ANALYSIS

MEMBER			AREA	R.G.	LENGTH	L/R	1	2	3	4	5	6	RATIO
40	16	18	0.720	0.575	100.00	139.	0.11	0.36	-0.88	-1.02	-0.21	-0.83	0.42
41	14	18	1.074	0.840	126.49	120.	-0.13	-0.24	-0.31	-0.39	-0.01	0.50	0.15
42	15	17	1.074	0.840	126.49	120.	-0.13	-0.24	-0.17	0.49	-0.01	0.50	0.12
43	13	17	1.394	1.061	156.21	118.	-0.27	-0.16	0.48	1.13	-2.15	0.53	0.44
44	13	18	1.394	1.061	156.21	118.	-0.27	-0.16	0.25	0.88	-2.15	0.53	0.40
45	14	16	1.394	1.061	156.21	118.	0.17	-0.15	-0.06	-0.48	2.23	0.17	0.31
46	15	16	1.394	1.061	156.21	118.	0.17	-0.15	0.26	0.06	2.23	0.17	0.29
47	16	19	3.290	1.770	120.00	54.	-0.04	-0.63	1.89	2.16	2.23	1.40	0.51
48	17	20	3.290	1.770	120.00	54.	-0.33	-0.34	-0.40	0.48	-1.18	0.80	0.20
49	18	21	3.290	1.770	120.00	54.	-0.33	-0.34	-0.04	0.30	-1.18	0.80	0.18
50	20	21	0.291	0.262	40.00	122.	0.73	0.60	0.33	-0.97	3.06	-1.48	0.63
51	19	20	0.720	0.575	100.00	139.	0.13	0.36	-0.22	-0.93	-0.71	-0.78	0.38
52	19	21	0.720	0.575	100.00	139.	0.13	0.36	-0.99	-0.80	-0.71	-0.78	0.47
53	17	21	1.074	0.840	126.49	120.	-0.23	-0.25	-0.69	-0.16	-0.86	0.58	0.27
54	18	20	1.074	0.840	126.49	120.	-0.23	-0.25	0.38	0.73	-0.86	0.58	0.28
55	16	20	1.394	1.061	156.21	118.	-0.20	-0.15	0.97	1.21	-2.07	0.50	0.49
56	16	21	1.394	1.061	156.21	118.	-0.20	-0.15	0.04	0.76	-2.07	0.50	0.36
57	17	19	1.394	1.061	156.21	118.	0.08	-0.13	-0.34	-0.40	2.31	0.14	0.33
58	18	19	1.394	1.061	156.21	118.	0.08	-0.13	0.29	-0.06	2.31	0.14	0.28
59	19	22	3.290	1.770	120.00	54.	0.02	-0.62	1.50	1.41	4.88	1.17	0.59
60	20	23	3.290	1.770	120.00	54.	-0.42	-0.34	0.69	1.22	-2.43	0.89	0.35
61	21	24	3.290	1.770	120.00	54.	-0.42	-0.34	-0.70	0.24	-2.43	0.89	0.31
62	23	24	0.873	0.685	40.00	47.	0.03	0.20	-1.06	-1.27	5.47	-0.78	0.47
63	22	23	0.873	0.685	100.00	117.	0.12	0.29	-2.55	-1.18	-0.64	-0.65	0.49
64	22	24	0.873	0.685	100.00	117.	0.12	0.29	1.51	-0.17	-0.64	-0.65	0.27
65	20	24	1.074	0.840	126.49	120.	-0.34	-0.26	-1.04	0.10	-1.76	0.69	0.41
66	21	23	1.074	0.840	126.49	120.	-0.34	-0.26	0.95	0.98	-1.76	0.69	0.47
67	19	23	1.394	1.061	156.21	118.	-0.13	-0.16	1.12	1.15	-1.74	0.49	0.46
68	19	24	1.394	1.061	156.21	118.	-0.13	-0.16	0.09	0.70	-1.74	0.49	0.32
69	20	22	1.394	1.061	156.21	118.	-0.00	-0.14	-0.96	-0.46	2.64	0.13	0.43
70	21	22	1.394	1.061	156.21	118.	-0.00	-0.14	0.59	-0.12	2.64	0.13	0.34
71	22	25	3.290	1.770	120.00	54.	0.15	-0.59	1.80	1.33	4.20	1.15	0.56
72	23	26	3.290	1.770	120.00	54.	-0.50	-0.34	0.57	1.60	3.39	0.97	0.44
73	24	27	3.290	1.770	120.00	54.	-0.50	-0.34	-0.12	0.43	3.39	0.97	0.35
74	26	27	0.720	0.575	40.00	56.	0.42	0.25	-0.08	-0.72	2.20	-0.69	0.27
75	25	26	0.720	0.575	100.00	139.	0.12	0.35	-0.26	-1.03	-0.15	-0.79	0.33
76	25	27	0.720	0.575	100.00	139.	0.12	0.35	-1.39	-0.74	-0.15	-0.79	0.44
77	23	27	1.074	0.840	126.49	120.	-0.40	-0.27	1.41	0.88	-2.50	0.75	0.59
78	24	26	1.074	0.840	126.49	120.	-0.40	-0.27	-1.13	0.64	-2.50	0.75	0.51
79	22	26	1.394	1.061	156.21	118.	-0.20	-0.16	-0.83	0.37	0.86	0.33	0.19

TABLE 3 - (CONT.)

MEMBER		AREA	R.G.	LENGTH	L/R	1	2	3	4	5	6	RATIO
80	22 27	1.394	1.061	156.21	118.	-0.20	-0.16	1.08	0.40	0.86	0.33	0.28
81	23 25	1.394	1.061	156.21	118.	0.09	-0.13	1.08	0.45	-0.70	0.32	0.27
82	24 25	1.394	1.061	156.21	118.	0.09	-0.13	-0.03	0.26	-0.70	0.32	0.14
83	25 28	3.290	1.770	120.00	54.	0.22	-0.57	2.01	1.32	3.22	1.15	0.50
84	26 29	3.290	1.770	120.00	54.	-0.62	-0.36	-0.61	1.50	-2.97	0.99	0.36
85	27 30	3.290	1.770	120.00	54.	-0.62	-0.36	0.94	0.57	-2.97	0.99	0.38
86	29 30	0.720	0.575	40.00	56.	0.47	0.25	-0.08	-0.72	1.90	-0.68	0.25
87	28 29	0.720	0.575	100.00	139.	0.14	0.34	-0.31	-1.00	-0.00	-0.77	0.31
88	28 30	0.720	0.575	100.00	139.	0.14	0.34	-1.32	-0.69	-0.00	-0.77	0.40
89	26 30	1.074	0.840	126.49	120.	-0.45	-0.26	0.93	0.87	-2.17	0.72	0.51
90	27 29	1.074	0.840	126.49	120.	-0.45	-0.26	-0.68	0.64	-2.17	0.72	0.44
91	25 29	1.394	1.061	156.20	118.	-0.13	-0.16	-0.27	0.38	0.82	0.32	0.16
92	25 30	1.394	1.061	156.20	118.	-0.13	-0.16	0.75	0.34	0.82	0.32	0.24
93	26 28	1.394	1.061	156.21	118.	0.01	-0.12	0.87	0.45	-0.74	0.31	0.25
94	27 28	1.394	1.061	156.21	118.	0.01	-0.12	-0.12	0.19	-0.74	0.31	0.14
95	28 31	3.290	1.770	120.00	54.	0.20	-0.55	2.03	1.30	2.26	1.15	0.44
96	29 32	3.290	1.770	120.00	54.	-0.68	-0.37	-1.15	1.41	-2.54	0.99	0.36
97	30 33	3.290	1.770	120.00	54.	-0.68	-0.37	1.50	0.68	-2.54	0.99	0.39
98	32 33	0.291	0.262	40.00	122.	1.23	0.64	-0.28	-1.78	3.95	-1.69	0.88
99	31 32	0.720	0.575	100.00	139.	0.19	0.34	-0.14	-0.98	0.21	-0.79	0.32
100	31 33	0.720	0.575	100.00	139.	0.19	0.34	-1.53	-0.75	0.21	-0.79	0.47
101	29 33	1.074	0.840	126.49	120.	-0.49	-0.27	0.47	0.88	-1.85	0.72	0.44
102	30 32	1.074	0.840	126.49	120.	-0.49	-0.27	-0.21	0.65	-1.85	0.72	0.37
103	28 32	1.394	1.061	156.21	118.	-0.06	-0.15	-0.02	0.36	0.74	0.32	0.16
104	28 33	1.394	1.061	156.21	118.	-0.06	-0.15	0.77	0.36	0.74	0.32	0.24
105	29 31	1.394	1.061	156.20	118.	-0.08	-0.11	0.36	0.43	-0.82	0.31	0.21
106	30 31	1.394	1.061	156.20	118.	-0.08	-0.11	0.15	0.22	-0.82	0.31	0.17
107	31 34	3.290	1.770	120.00	54.	0.08	-0.52	1.89	1.26	1.30	1.13	0.37
108	32 35	3.290	1.770	120.00	54.	-0.70	-0.38	-1.21	1.31	-2.10	0.99	0.34
109	33 36	3.290	1.770	120.00	54.	-0.70	-0.38	1.72	0.79	-2.10	0.99	0.38
110	35 36	0.291	0.262	40.00	122.	1.26	0.69	-0.53	-1.87	3.29	-1.75	0.85
111	34 35	0.720	0.575	100.00	139.	0.19	0.28	-0.08	-0.79	0.30	-0.66	0.28
112	34 36	0.720	0.575	100.00	139.	0.19	0.28	-1.28	-0.65	0.30	-0.66	0.41
113	32 36	1.074	0.840	126.49	120.	-0.50	-0.28	0.07	0.88	-1.53	0.72	0.37
114	33 35	1.074	0.840	126.49	120.	-0.50	-0.28	0.32	0.65	-1.53	0.72	0.37
115	31 35	1.394	1.061	156.21	118.	-0.01	-0.16	0.35	0.36	0.65	0.33	0.19
116	31 36	1.394	1.061	156.21	118.	-0.01	-0.16	0.67	0.39	0.65	0.33	0.22
117	32 34	1.394	1.061	156.21	118.	-0.19	-0.12	-0.04	0.43	-0.91	0.32	0.19
118	33 34	1.394	1.061	156.21	118.	-0.19	-0.12	0.30	0.25	-0.91	0.32	0.20
119	34 37	3.290	1.770	120.00	54.	-0.18	-0.53	1.66	1.33	0.27	1.21	0.30

TABLE 3 - (CONT.)

MEMBER			AREA	R.G.	LENGTH	L/R	1	2	3	4	5	6	RATIO	
120	35	38	3.290	1.770	120.00	54.	-0.68	-0.40	-0.75	1.25	-1.68	1.02	0.29	
121	36	39	3.290	1.770	120.00	54.	-0.68	-0.40	1.63	0.93	-1.68	1.02	0.36	
122	38	39	0.873	0.685	40.00	47.	0.57	0.34	-0.40	-0.91	1.26	-0.84	0.20	
123	37	38	0.873	0.685	100.00	117.	0.70	0.65	-0.64	-1.77	1.21	-1.56	0.54	
124	37	39	0.873	0.685	100.00	117.	0.70	0.65	-2.18	-1.62	1.21	-1.56	0.66	
125	35	39	1.074	0.840	126.49	120.	-0.52	-0.31	-0.24	0.96	-1.29	0.78	0.34	
126	36	38	1.074	0.840	126.49	120.	-0.52	-0.31	0.94	0.72	-1.29	0.78	0.41	
127	34	38	1.394	1.061	156.21	118.	0.10	-0.10	0.70	0.20	0.67	0.21	0.19	
128	34	39	1.394	1.061	156.21	118.	0.10	-0.10	0.32	0.28	0.67	0.21	0.17	
129	35	37	1.394	1.061	156.20	118.	-0.24	-0.07	-0.46	0.27	-0.88	0.20	0.19	
130	36	37	1.394	1.061	156.20	118.	-0.24	-0.07	0.20	0.13	-0.88	0.20	0.17	
131	37	40	3.730	1.768	139.54	63.	-0.39	-0.57	1.59	1.46	-0.30	1.33	0.14	
132	38	40	3.730	1.768	129.12	58.	-0.80	-0.49	-0.20	1.42	-1.72	1.22	0.35	
133	39	40	3.730	1.768	129.12	58.	-0.80	-0.49	1.54	1.21	-1.72	1.22	0.44	
134	22	41	0.500	0.045	1228.81	****	-0.63	-0.07	0.09	-1.58	-4.49	-0.59	*****	X
135	22	42	0.500	0.045	1228.81	****	-0.63	-0.07	-5.18	-2.36	-4.49	-0.59	*****	X
136	23	41	0.500	0.045	1269.01	****	-0.71	-0.02	0.18	-1.36	-5.26	-0.57	*****	X
137	24	42	0.500	0.045	1269.01	****	-0.71	-0.02	-5.53	-2.44	-5.26	-0.57	*****	X

TABLE 3 - (CONT.)

REFERENCES:

(1) Richards, C. J.: Mechanical Engineering in Radar and Communication, van Nostrand Reinhold

(2) Ruze, J.: Small Displacements in Parabolic Reflectors, MIT Lincoln Laboratory, 1969

(3) Zarghamee, M. S.: Beamshift and Gain Degradation Due to Deflection in the Proposed C. I. C. Antenna, Aeronomy Report No. 25, Appendix F, University of Illinois, 1968