NATIONAL RADIO ASTRONOMY OBSERVATORY
GREEN BANK, WEST VIRGINIA

ELECTRONICS DIVISION INTERNAL REPORT No. 162

ANALOG INPUT TO 140-FT H316

DWAYNE SCHIEBEL

NOVEMBER 1975

NUMBER OF COPIES: 150

ANALOG INPUT TO 140-FT H316

Dwayne Schiebel

TABLE OF CONTENTS

		Page
1.	Introduction	1
2.	Programming	1
3.	Analog Input System	1
4.	H316 Analog Input Card	2
5.	DVM Multiplexer Control	2
6.	Analog Buffer Cards	3
7.	Temperature Input	3
8.	Buffer Cards for Interferometer Weather Data	4
9.	Credits	4

LIST OF FIGURES

1	Analog Input System Block Diagram	5
2	DVM Multiplexer Control Block Diagram	5
3	Analog Input to 316 Logic Diagram	6
4	DVM Multiplexer Control Logic Diagram	7-8
5	Cable List	9
6	Analog Multiplexer and Temperature Input Card	10
7	Interferometer Weather Data Interface	11

ANALOG INPUT TO 140-FT H316

Dwayne Schiebel

1. INTRODUCTION

This report describes the interface necessary for the 316 computer to input analog data to the 140-ft telescope.

2. PROGRAMMING

OCP 40 — Resets the input system to channel zero.

INA 1140 — Inputs analog data and steps the input system to read the next channel. There are sixteen channels of data (CH 0 - CH 15). It takes about 45 milliseconds between each INA. At this time some of these channels are not used. The data format for temperature (CH 0) is listed below.

Bit	
1	Sign 1 = +
2	0
3	0
4	100's of degrees C
5	10's of degrees C
6	
7	
8	
9	Units of degrees C
10	
11	
12	
13	Tenths of degrees C
14	
15	
16	

Three channels (CH 4, CH 5, and CH 6) contain weather data from the interferometer. Channel 4 is dew point, CH 5 is temperature, and CH 6 is barometric pressure.

3. ANALOG INPUT SYSTEM

The analog input system has two sections (see Figure 1).

One section located in the 316 interface chassis (H316 analog input card) contains an address decoder, 16-bit shift register, and necessary gating to apply the data to the computer input bus.

The other section (DVM multiplexer control) located in the operator's console contains a digital voltmeter, logic to control the DVM, shift register storage, 16-channel analog multiplexer, and analog buffer cards.

4. H316 ANALOG INPUT CARD

This card decodes the address bus and generates the following signals:

OCP 40	This signal is used to reset a binary counter and ready flip-flop. This signal is also used by the DVM multiplexer control card located in the operator's console.
INA 140	This signal resets a binary counter (÷ 16) and ready flip-flop. It is also used by the DVM multiplexer control card.
AD 140+A/+B	These signals are used to gate the data on the input bus.

This card, in addition to the address decode, contains a 16-bit shift register that receives its data from the DVM control card. A binary counter and ready flip-flop are reset by an OCP 40 or an INA 140. These two signals also cause the DVM to take a reading. When the reading is finished, the data is clocked into the shift register. The clock pulses are counted and on the sixteenth clock the ready flip-flop is set. This enables the 316 to do an INA 140 which starts the cycle again.

5. DVM MULTIPLEXER CONTROL

This card located in A chassis in the operator's console controls a DVM and analog multiplexer (see Figure 2).

The computer can reset a ÷ 16 counter by an OCP 40. When the computer does an INA 140 the counter is incremented by one. The DVM control logic will start a conversion on a time share basis with the local readout. This conversion will be started by an OCP 40 or an INA 140.

The local readout conversion is initiated 20 times a second. The address for the local readout is selected by a digi switch.

When a reading was taken for the computer, the data is loaded into a shift register and shifted to the "316 Analog Input Card" at a 20 kHz rate.

6. ANALOG BUFFER CARDS

One "Douglas Card" has space for two analog channels. The analog buffer cards can contain circuitry necessary for interfacing any analog signals. The output of the analog multiplexer is divided by 50. The range of the DVM is ± 199.9 millivolts. The input to the multiplexer should be limited to ± 7.5 volts.

7. TEMPERATURE INPUT

"Temperature sensitive resistors" are used to sense temperature. These resistors have a nominal resistance of 1K ohm at 25°C. These resistors have a positive temperature coefficient.

Each analog circuit has to be calibrated for each resistor. There are two adjustments, one for the resistance value at 0°F (-17.8°C) and one for 100°F (37.8°C). To calibrate the circuit, set in the 0°F value in place of the "TSR" and adjust the -17.8 pot for a -17.8 meter reading on the appropriate channel. Then set in the 100°F value and adjust the 37.8 pot for a meter reading of 37.8. These adjustments will have to be made several times as one adjustment affects the other.

We have purchased 25 of these resistors and measured their resistance at 0°F and 100°F for calibration.

Corning Glass Works has discontinued production of these "temperature sensitive resistors".

7. BUFFER CARDS FOR INTERFEROMETER WEATHER DATA

Three lines were run from the interferometer to indicate dew point, temperature, and pressure.

No adjustment is required on these signals. The DVM display can be converted to a meaningful reading by the approximate formulas listed below:

Reading -60 = dew point.

Reading -60 = temperature.

Air Pressure = .1375 reading + 61.25.

8. CREDITS

Credit should be given to Ron Weimer and Jerry Turner for interfacing the interferometer weather data. Credit should also be given to Doreen Morris, R. Skaggs and the Green Bank Machine Shop for their help in constructing this system.

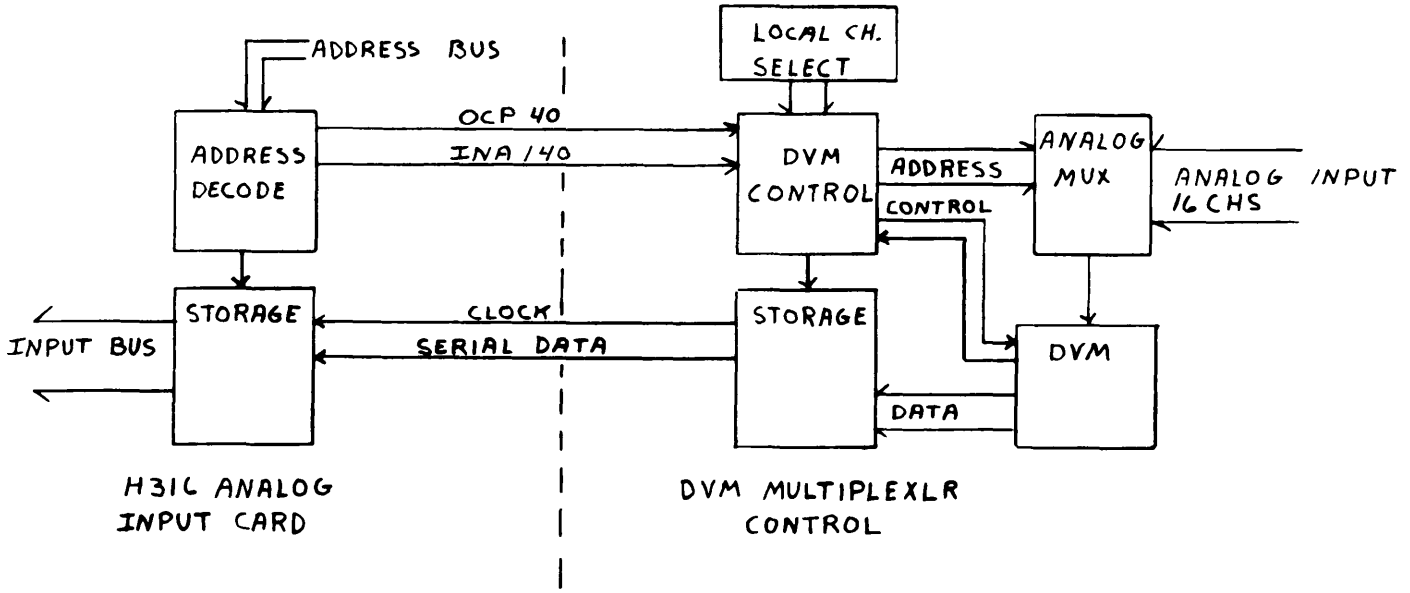
ADDRESS BUS
LOCAL CH. SELECT
OCP 40
INA 140
ADDRESS DECODE
DVM CONTROL
ADDRESS
CONTROL
ANALOG MUX
ANALOG INPUT 16 CHS
INPUT BUS
STORAGE
CLOCK
SERIAL DATA
STORAGE
DVM
DATA
H31C ANALOG INPUT CARD
DVM MULTIPLEXLR CONTROL

FIG 1

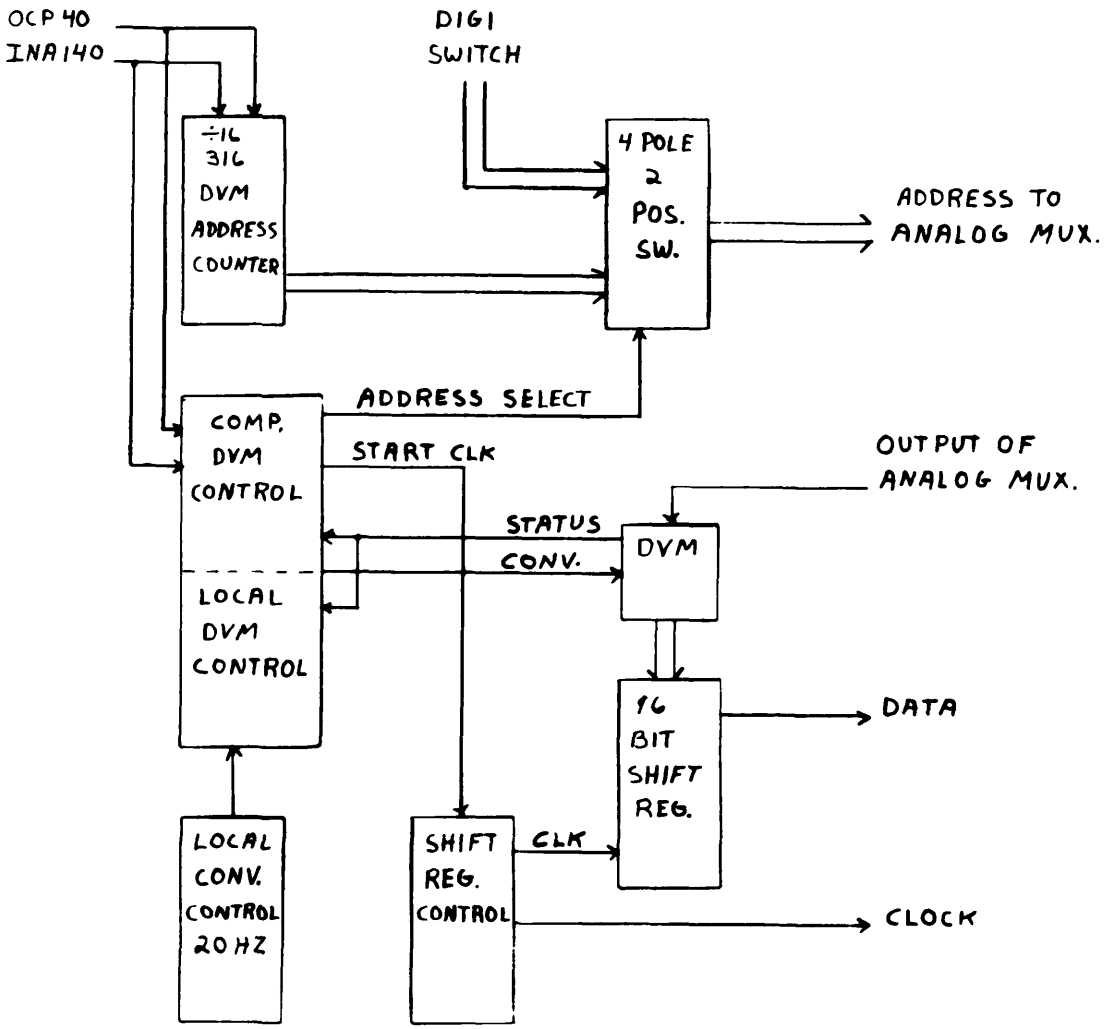
OCP 40
INA140
DIGI SWITCH
÷16 316 DVM ADDRESS COUNTER
4 POLE 2 POS. SW.
ADDRESS TO ANALOG MUX.
ADDRESS SELECT
COMP. DVM CONTROL
START CLK
OUTPUT OF ANALOG MUX.
STATUS
CONV.
DVM
LOCAL DVM CONTROL
16 BIT SHIFT REG.
DATA
LOCAL CONV. CONTROL 20 HZ
SHIFT REG. CONTROL
CLK
CLOCK

FIG 2

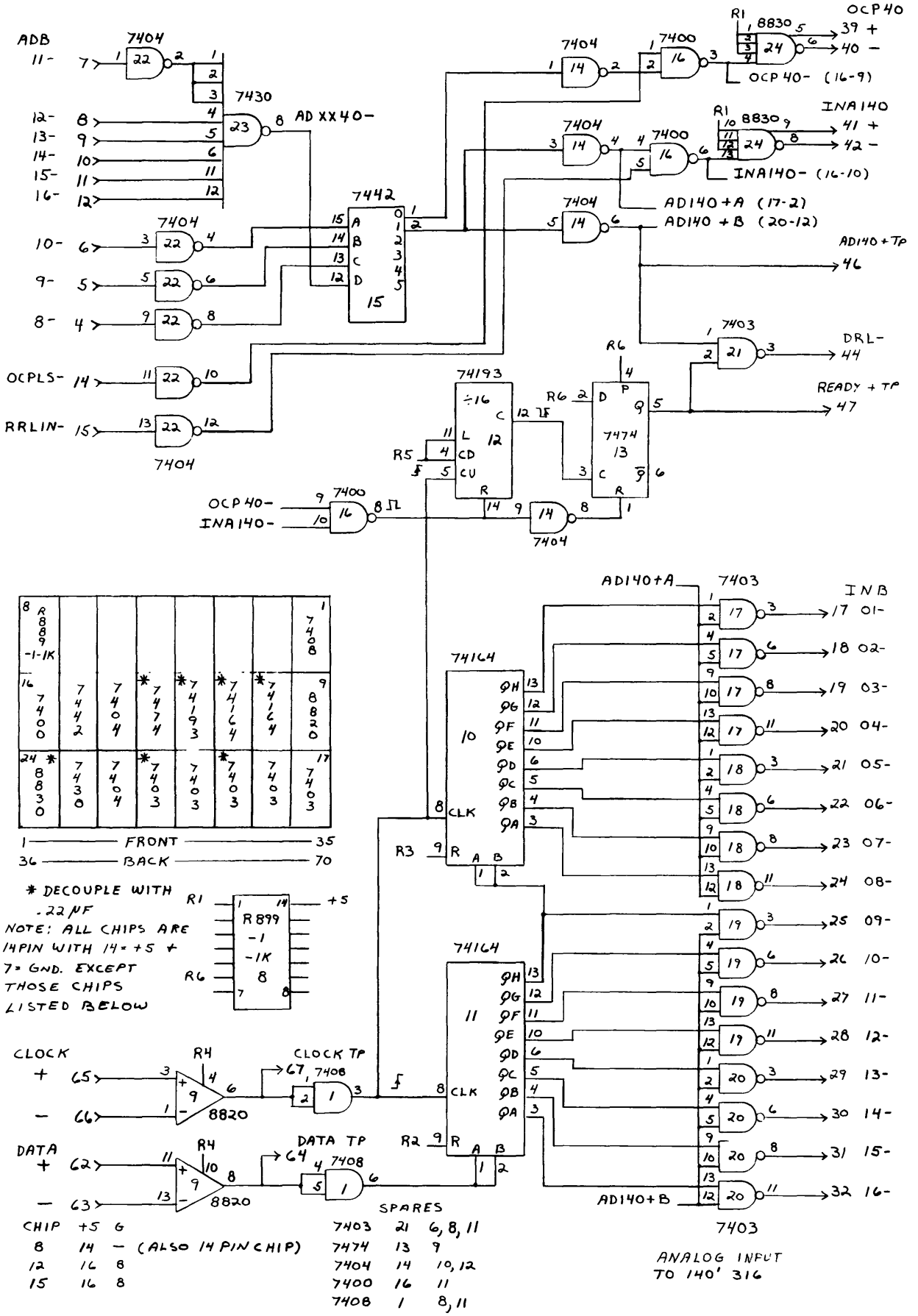
ADB
11-
12-
13-
14-
15-
16-
10-
9-
8-
OCPLS-
RRLIN-
7404
7430
AD XX40-
7442
7400
7403
7474
74193
74164
8830
8820
R1
R2
R3
R4
R5
R6
OCP40
39 +
40 -
OCP40- (16-9)
INA140
41 +
42 -
INA140- (16-10)
AD140+A (17-2)
AD140+B (20-12)
AD140+TP
46
DRL-
44
READY + TP
47
OCP40-
INA140-
INB
17 01-
18 02-
19 03-
20 04-
21 05-
22 06-
23 07-
24 08-
25 09-
26 10-
27 11-
28 12-
29 13-
30 14-
31 15-
32 16-
AD140+A
AD140+B
FRONT
BACK
* DECOUPLE WITH .22 μF
NOTE: ALL CHIPS ARE 14PIN WITH 14 = +5 + 7 = GND. EXCEPT THOSE CHIPS LISTED BELOW
R899 -1 -1K
CLOCK
DATA
CLOCK TP
DATA TP
CHIP +5 G
8 14 - (ALSO 14 PIN CHIP)
12 16 8
15 16 8
SPARES
7403 21 6, 8, 11
7474 13 9
7404 14 10, 12
7400 16 11
7408 1 8, 11
ANALOG INPUT TO 140' 316

FIG 3

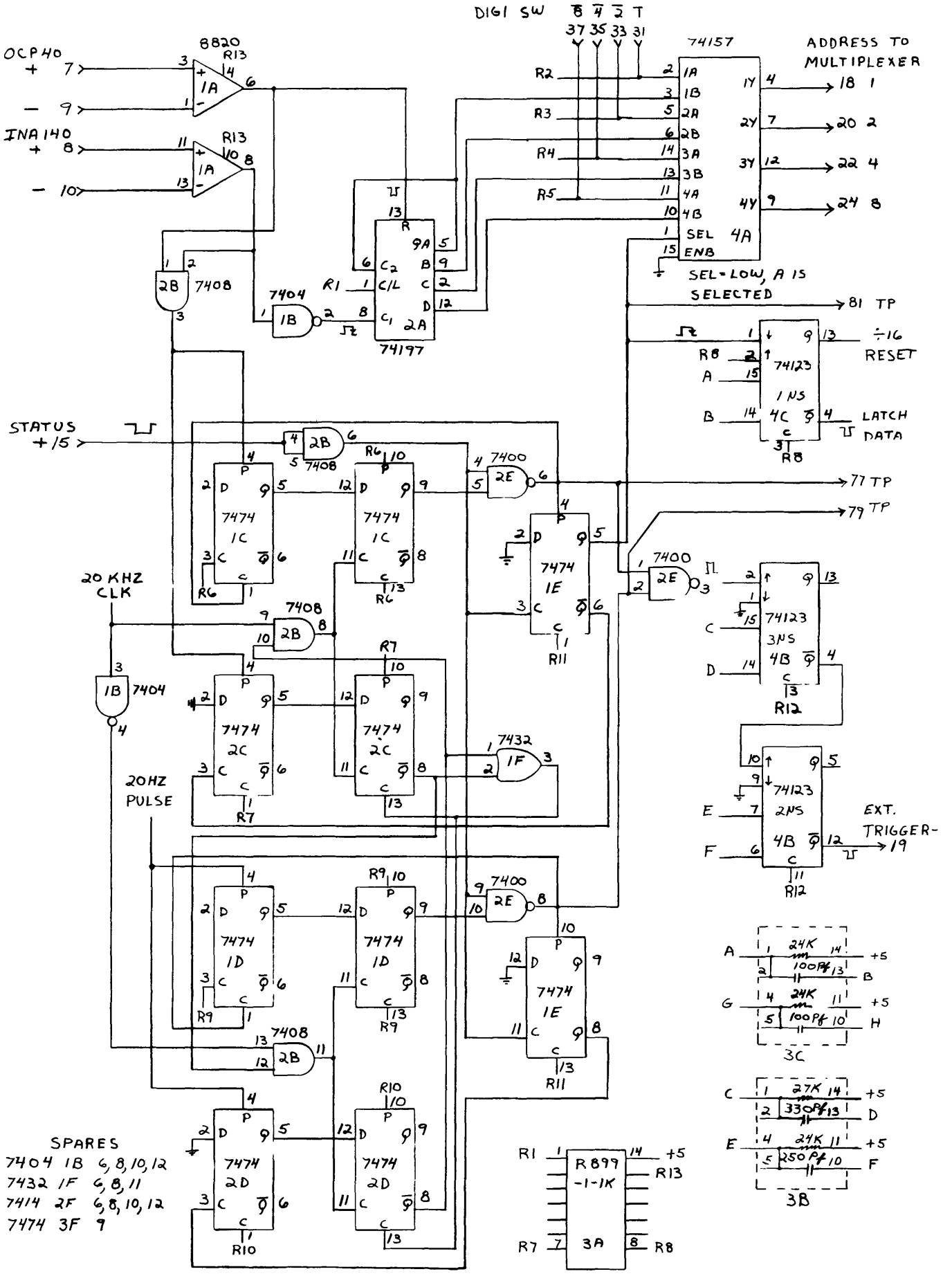
DIGI SW
8 4 2 T
37 35 33 31
74157
ADDRESS TO MULTIPLEXER
18 1
20 2
22 4
24 8
SEL = LOW, A IS SELECTED
81 TP
÷16 RESET
LATCH DATA
77 TP
79 TP
OCP 40
INA 140
8820
R13
7408
7404
74197
STATUS +15
7474 1C
7474 1E
7474 2C
7474 1D
7474 2D
7400
7432
20 KHZ CLK
20HZ PULSE
74123 1NS 4C
74123 3NS 4B
74123 2NS 4B
EXT. TRIGGER-19
24K
100Pf
27K
330Pf
250Pf
3C
3B
R899 -1-1K
3A
SPARES
7404 1B 6, 8, 10, 12
7432 1F 6, 8, 11
7414 2F 6, 8, 10, 12
7474 3F 9
DVM MULTIPLEXER CONTROL
PAGE 1 OF 2

FIG. 4A

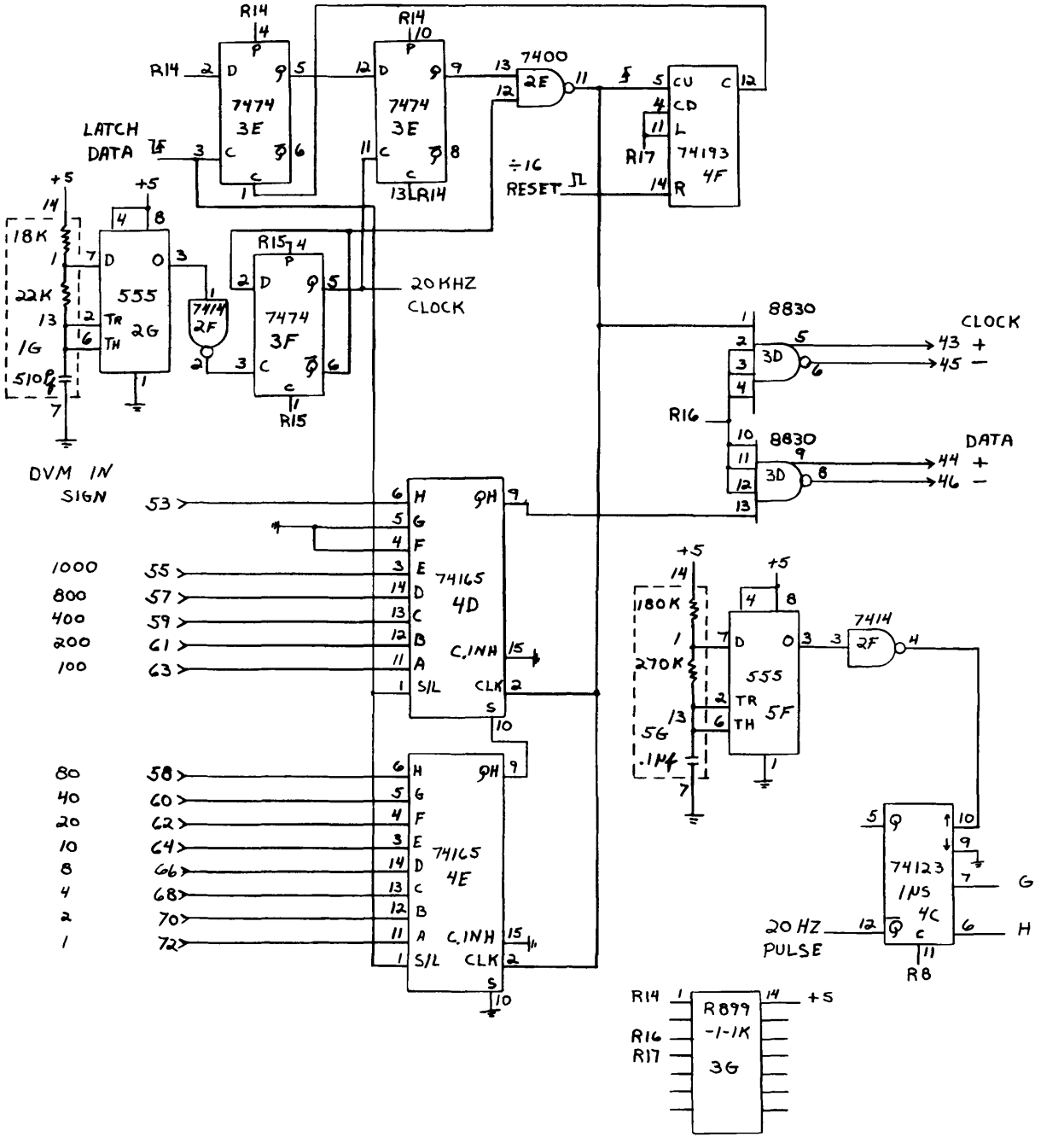

555 CONVERSION TO A 14 PIN CHIP

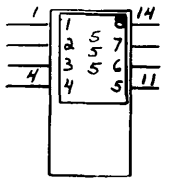

DVM MULTIPLEXER CONTROL

PAGE 2 OF 2

FIG. 4B

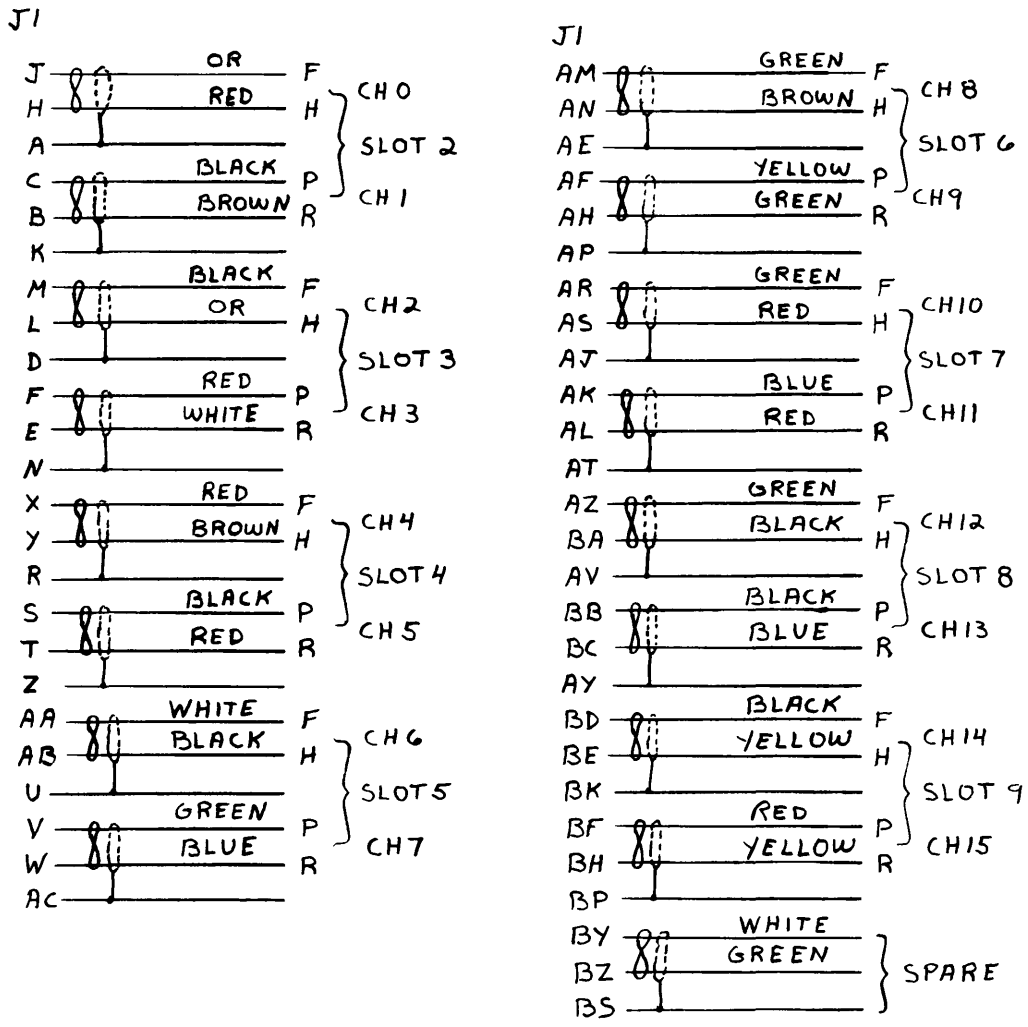

INPUT CABLE

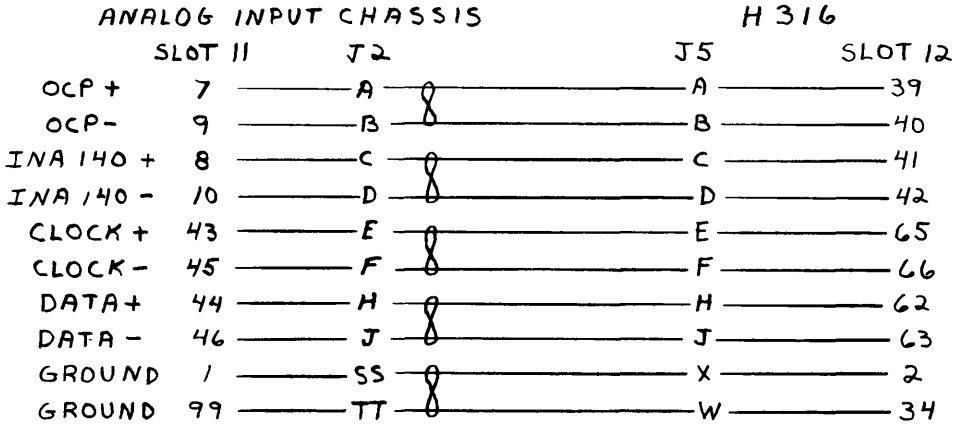

DATA CABLE

FIG. 5

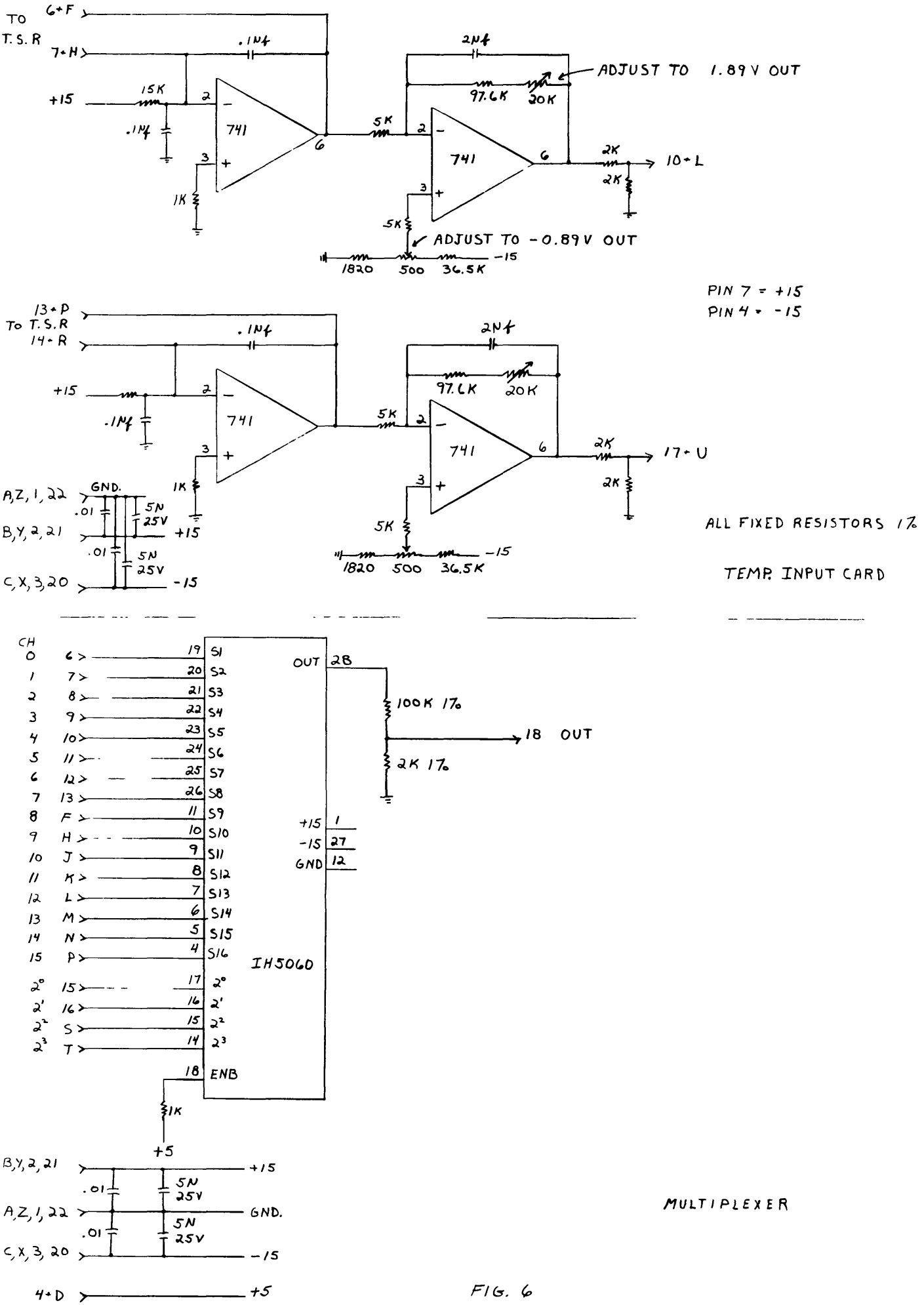
TO T.S.R
6+F
7+H
+15
.1Nf
15K
.1Nf
741
1K
5K
2Nf
97.6K
20K
ADJUST TO 1.89V OUT
741
2K
2K
10+L
5K
ADJUST TO -0.89V OUT
1820
500
36.5K
-15
PIN 7 = +15
PIN 4 = -15
13+P
To T.S.R
14+R
+15
.1Nf
741
1K
5K
2Nf
97.6K
20K
741
2K
2K
17+U
5K
1820
500
36.5K
-15
A,Z,1,22
GND.
.01
5N 25V
B,Y,2,21
+15
.01
5N 25V
C,X,3,20
-15
ALL FIXED RESISTORS 1%
TEMP. INPUT CARD
CH
0 6
1 7
2 8
3 9
4 10
5 11
6 12
7 13
8 F
9 H
10 J
11 K
12 L
13 M
14 N
15 P
2° 15
2¹ 16
2² S
2³ T
S1
S2
S3
S4
S5
S6
S7
S8
S9
S10
S11
S12
S13
S14
S15
S16
2°
2¹
2²
2³
ENB
IH5060
OUT 28
100K 1%
18 OUT
2K 1%
+15 1
-15 27
GND 12
1K
+5
B,Y,2,21
+15
.01
5N 25V
A,Z,1,22
GND.
.01
5N 25V
C,X,3,20
-15
4+D
+5
MULTIPLEXER

FIG. 6

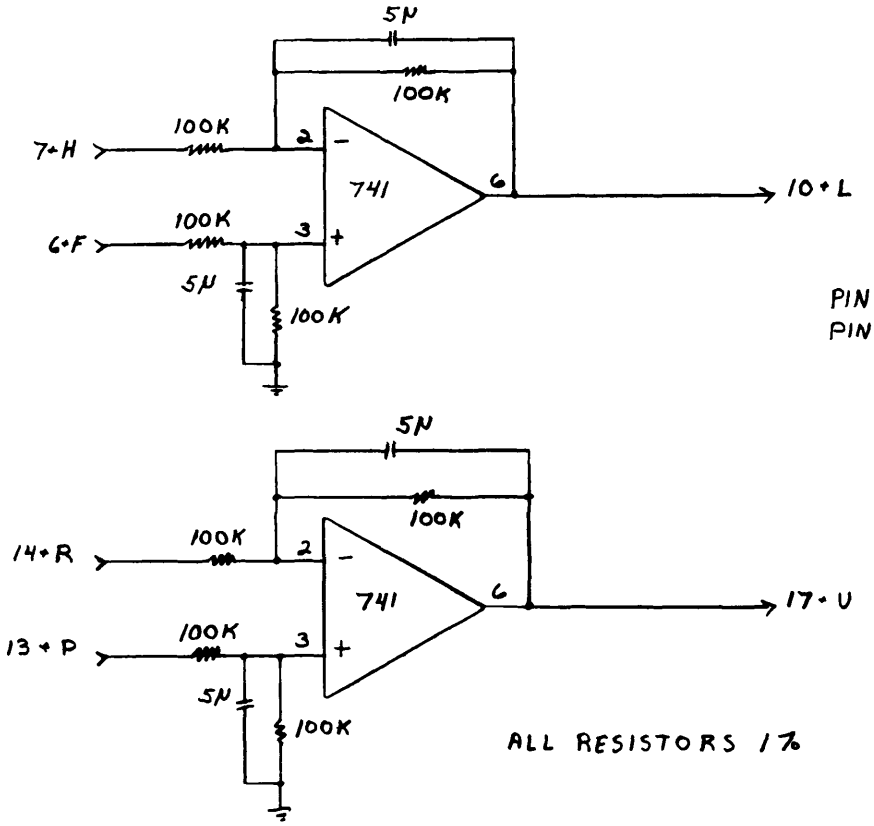

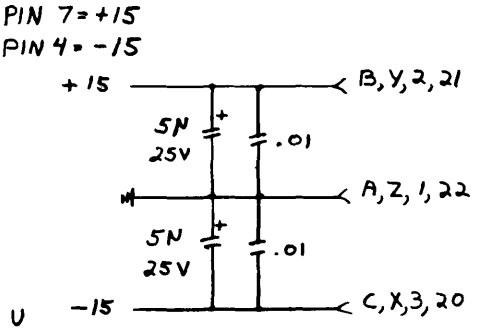

BUFFER CARD FOR INTERFEROMETER DATA SIGNALS LOCATED AT 140'

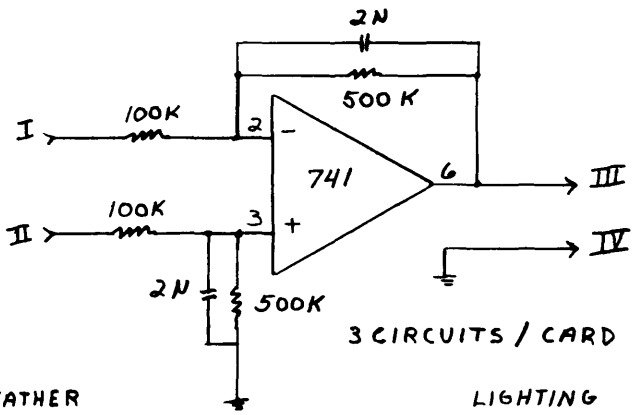

3 CIRCUITS / CARD

CIRCUIT	PINS 1	2	3	
	19	12	6	I
	17	13	8	II
	21	15	10	III
	A,1	A,1	A,1	IV

ALL RESISTORS 1%

C-3 +15
D,4 -15

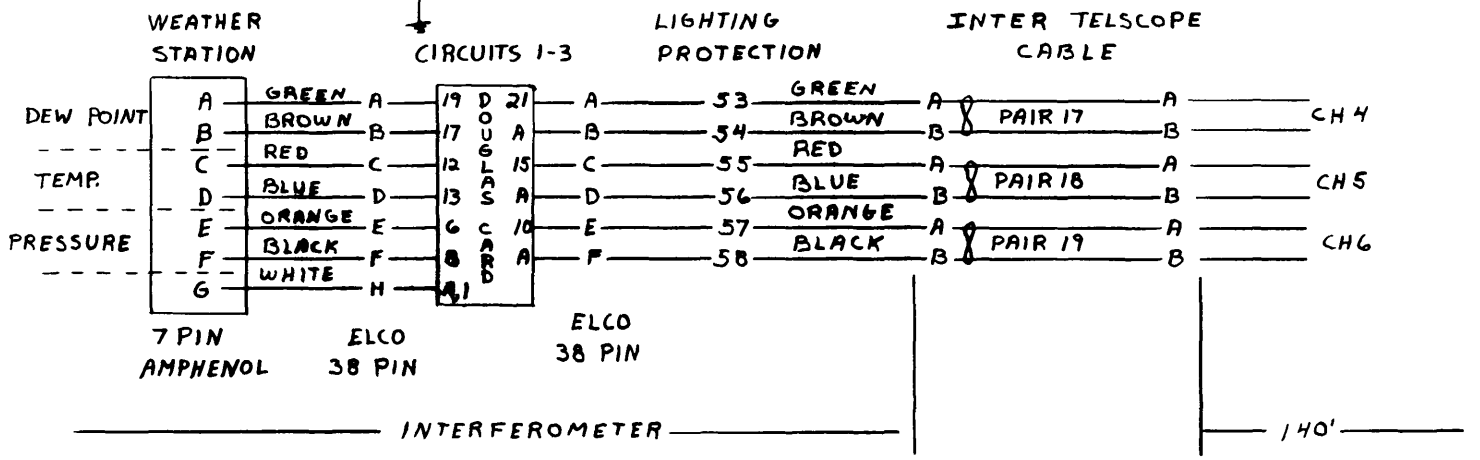

FIG 7