NATIONAL RADIO ASTRONOMY OBSERVATORY
GREEN BANK, WEST VIRGINIA

ELECTRONICS DIVISION INTERNAL REPORT No. 238

L/C/X BAND CRYOGENIC RECEIVER FRONT-END NO. 2 FOR RVARD RADIO ASTRONOMY STATION, FORT DAVIS, TEX

GEORGE H. BEHRENS, JR.
IRA E. JEFFRIES

NOVEMBER 1983

NUMBER OF COPIES: 150

L/C/X BAND CRYOGENIC RECEIVER
FRONT END NO. 2 FOR
HARVARD RADIO ASTRONOMY STATION, FORT DAVIS, TEXAS

George H. Behrens, Jr.
Ira E. Jeffries

TABLE OF CONTENTS

TABLES

LIST OF FIGURES

L/C/X BAND CRYOGENIC RECEIVER
FRONT-END NO. 2 FOR
HARVARD RADIO ASTRONOMY STATION, FORT DAVIS, TEXAS

George H. Behrens, Jr.

INTRODUCTION

The construction and testing of a three-band (L, C and X), cryogenically cooled receiver front-end for Harvard Radio Astronomy Station (HRAS) was completed at NRAO, Green Bank, in August 1983. When the new receiver is installed on the telescope at HRAS, it will allow that site to upgrade its observing capabilities from single polarization to dual polarization at L, C and X band. A brief description of the new front end and its operational characteristics will be covered in this report. As an aid to maintenance and troubleshooting, wiring diagrams and schematics will also be included.

The new receiver, designated as Receiver No. 2 to distinguish it from the existing three-band receiver (Receiver No. 1) presently in use at Fort Davis, is identical to Receiver No. 1 except for minor details which will be mentioned below. Receiver No. 1 was installed in January 1981 at HRAS. See EDIR No. 210. In May 1982, an X-band channel was added to Receiver No. 1. The "on telescope" system noise temperatures of Receiver No. 1 reported by Fort Davis personnel are as follows:

L Band ...	75°K
C Band ...	60- 65°K
X Band ...	125°K

It is expected that similar system noise temperatures can be expected with Receiver No. 2.

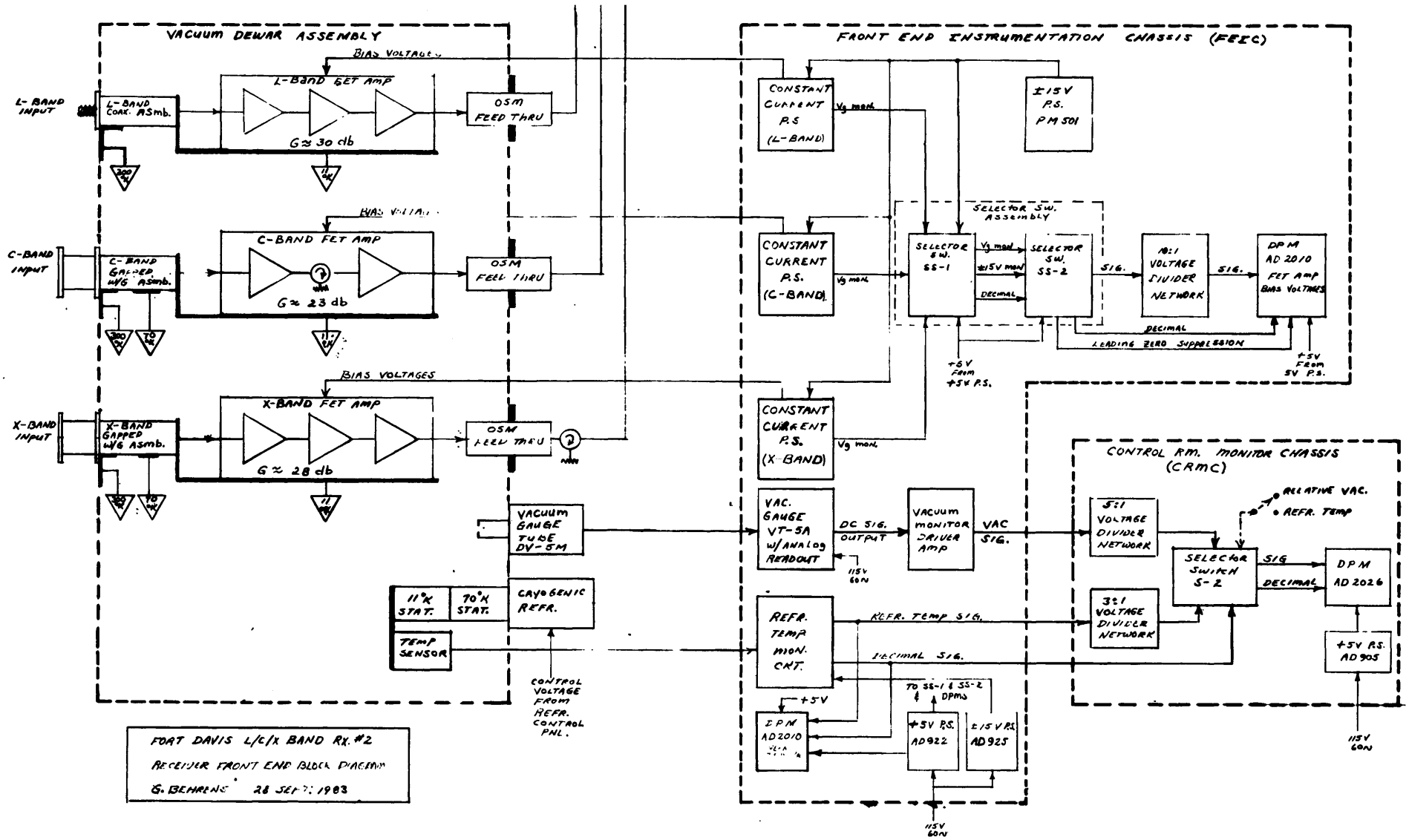

FIGURE 1

Receiver Front-End Block Diagram

GENERAL DESCRIPTION

The receiver front-end consists of three units: the vacuum dewar assembly the front-end instrumentation chassis (FEIC), and the control room monitor chassis (CRMC). The inter-relationship between the three units is shown in the receiver front-end block diagram given in Figure 1.

Vacuum Dewar Assembly

The vacuum dewar assembly houses the low noise GaAsFET amplifiers, associated wiring, waveguide and coaxial input and output lines, and the cryogenic refrigerator. Photographs of the dewar assembly and its wiring diagram are shown in Figures 2 and 3, respectively.

1. Dewar.

The aluminum dewar used in Receiver No. 2 is essentially the same type of dewar used in Receiver No. 1, i.e., it is a surplus dewar from the National Oceanic and Atmospheric Administration (NOAA). As in the case of Receiver No. 1 the dewar was modified to improve the vacuum integrity which was found unacceptable in the original state. This included replacing both original aluminum end plates on the dewar with stainless steel plates. It was discovered that both o the original plates had small leaks. It was also found necessary to rework one of the O-ring grooves on the dewar because of deformation in groove depth.

Vacuum testing was made with the Cryogenics Group's helium leak detector and found to be acceptable after the above modifications were made. Although very low leakage to helium of undetermined origin existed, further tests indicated that these had no apparent affect on the actual performance, e.g., the system cooled down to 11°K and was left operating for over one month with no detectable change in refrigerator temperature or relative vacuum level as measured by the vacuum monitor system. It is felt that the low level helium leakage detected by the helium detector is caused either by porous material used in the dewar construction, a porous weld, or due to normal helium leakage of O-rin in the system.

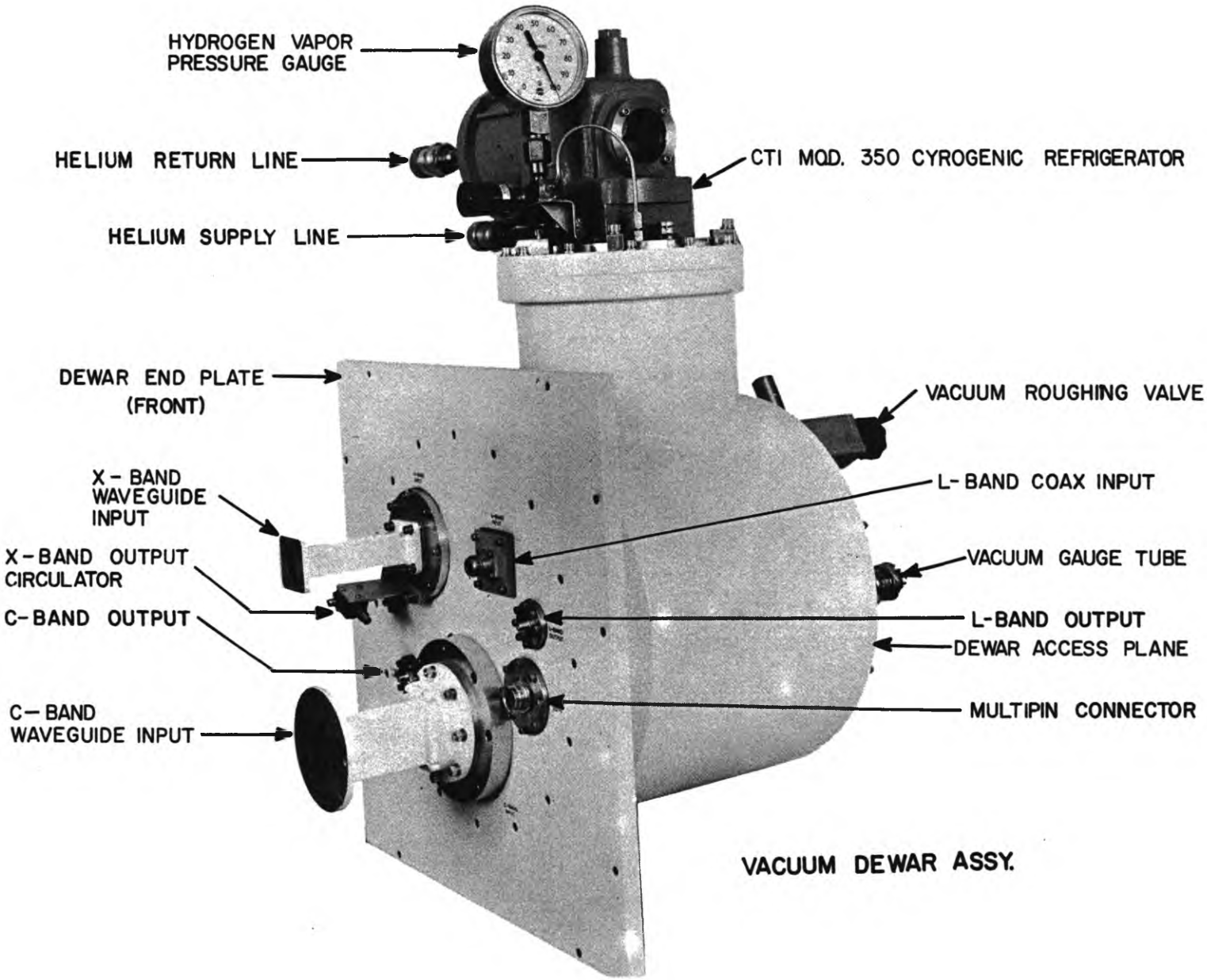

FIGURE 2A

Vacuum Dewar Assembly, Front View

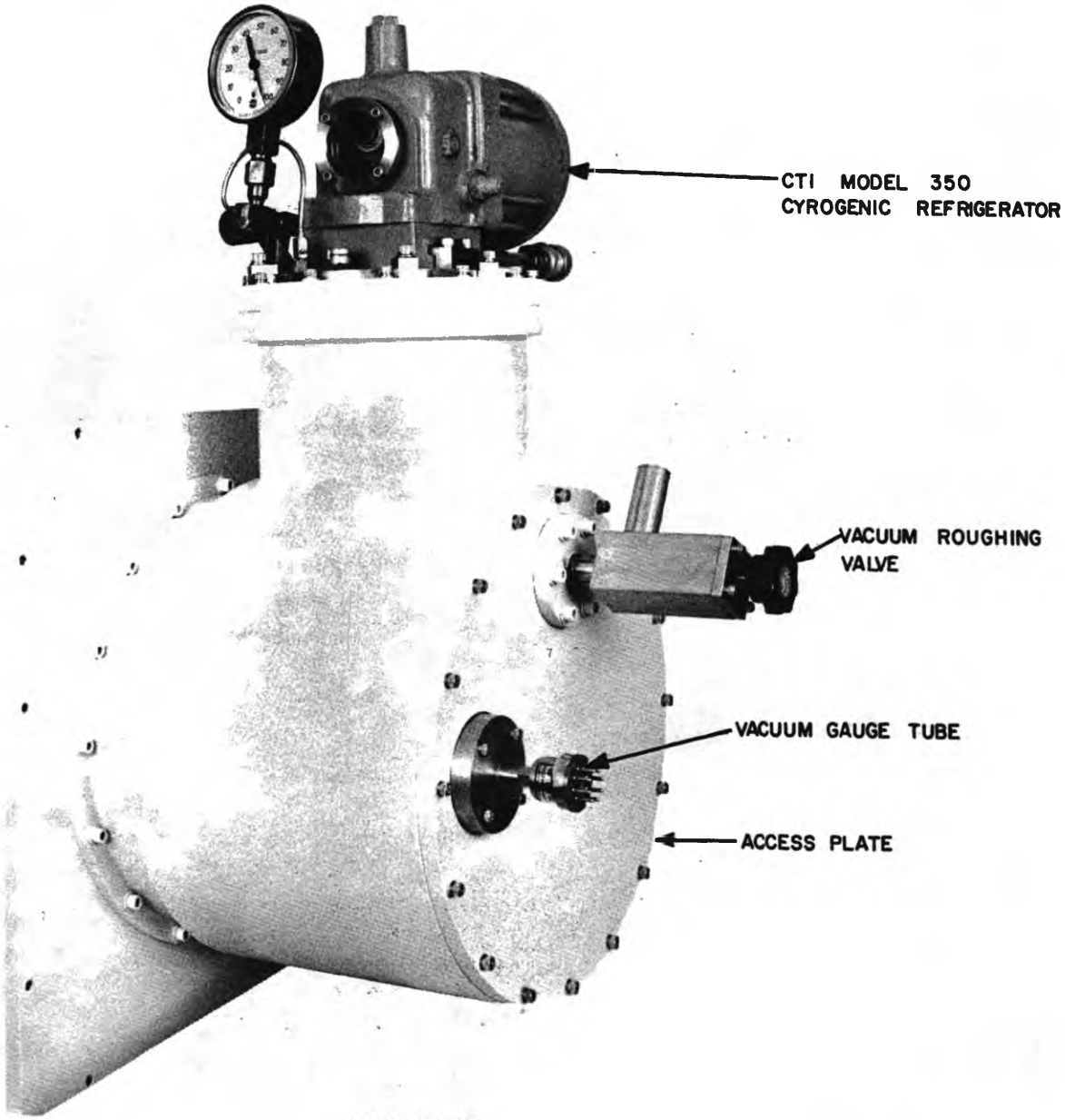

FIGURE 2B

Vacuum Dewar Assembly, Rear View

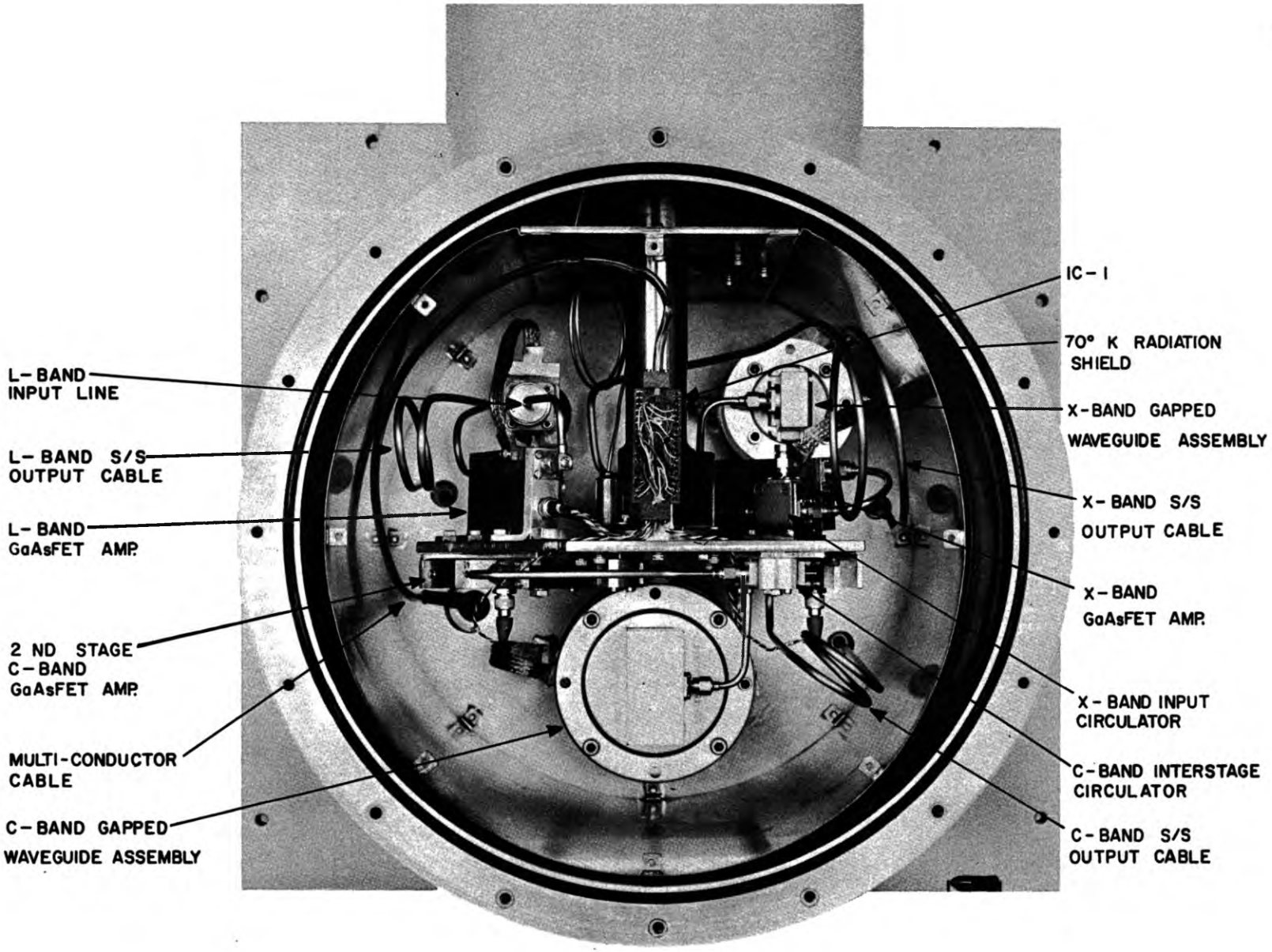

FIGURE 2C

Vacuum Dewar Assembly with Dewar and Heat Shield Access Plates Removed

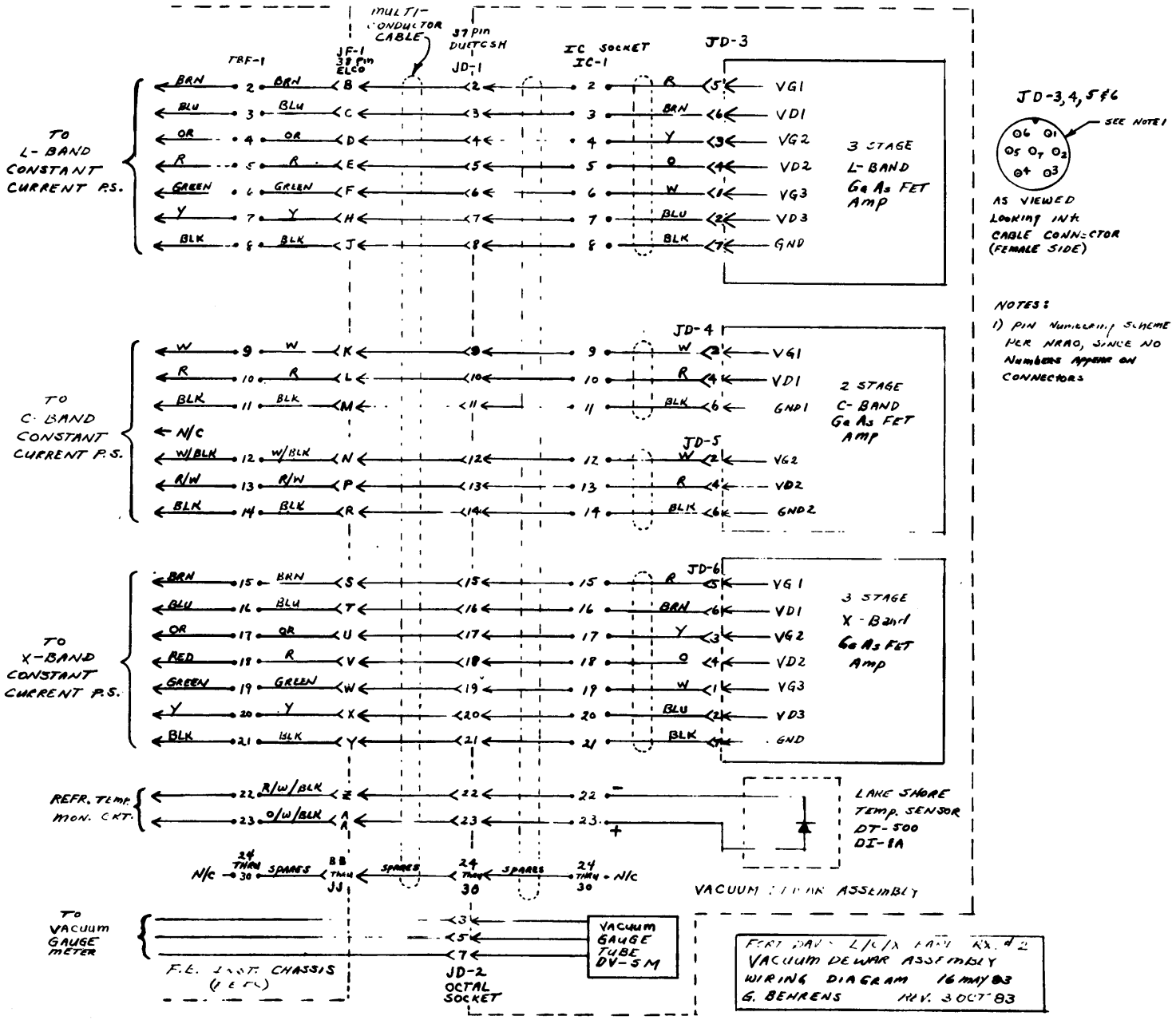
MULTI-CONDUCTOR CABLE
37 pin DUTCSH
JF-1 37 Pin ELCO
JD-1
IC SOCKET IC-1
JD-3
TO L-BAND CONSTANT CURRENT P.S.
3 STAGE L-BAND Ga As FET Amp
VG1
VD1
VG2
VD2
VG3
VD3
GND
JD-4
TO C-BAND CONSTANT CURRENT P.S.
2 STAGE C-BAND Ga As FET Amp
GND1
N/C
JD-5
VG2
VD2
GND2
JD-6
TO X-BAND CONSTANT CURRENT P.S.
3 STAGE X-Band Ga As FET Amp
REFR. TEMP. MON. CKT.
LAKE SHORE TEMP. SENSOR DT-500 DI-8A
SPARES
VACUUM DEWAR ASSEMBLY
TO VACUUM GAUGE METER
VACUUM GAUGE TUBE DV-5M
F.E. INST. CHASSIS (VEFC)
JD-2 OCTAL SOCKET
VACUUM DEWAR ASSEMBLY
WIRING DIAGRAM 16 MAY 83
G. BEHRENS REV. 3 OCT 83
JD-3,4,5 & 6
SEE NOTE 1
AS VIEWED LOOKING INTO CABLE CONNECTOR (FEMALE SIDE)
NOTES:
1) PIN NUMBERING SCHEME PER NRAO, SINCE NO NUMBERS APPEAR ON CONNECTORS

FIGURE 3

Because the thermal loading of Receiver No. 1 was very close to exceeding the 3 watt limit of the refrigerator as evidenced by the system operating temperatures (approximately 18-20°K), more attention was paid to the thermal loading considerations in Receiver No. 2. For example, in the case of Receiver No. 2, the room temperature heat shield was replaced with a heat shield tied to the 70° station. All output lines were made longer to increase their thermal resistance. Both the C-band and X-band waveguide inputs of Receiver No. 2 were redesigned to reduce thermal loading. Similarly, the L-band coaxial input line is a different design. As a result of these changes, the refrigerator of Receiver No. 2 operates at approximately 11°K instead of 18-20°K experienced by Receiver No. 1.

2. Vacuum characteristics.

Under normal operating conditions, the dewar can be evacuated to less than 5 microns within two or three hours at room temperature conditions. After cool down has been achieved, the gauge should read well below 0.1 micron and the relative vacuum level at the DPM close to 1.00 V.

If a vacuum leak is suspected, it is suggested that the dewar be evacuated to 5 microns at room temperature and then valved off. Then observe the vacuum level as a function of time. Any significant degradation from the curve given in Figure 4 will indicate a leak.

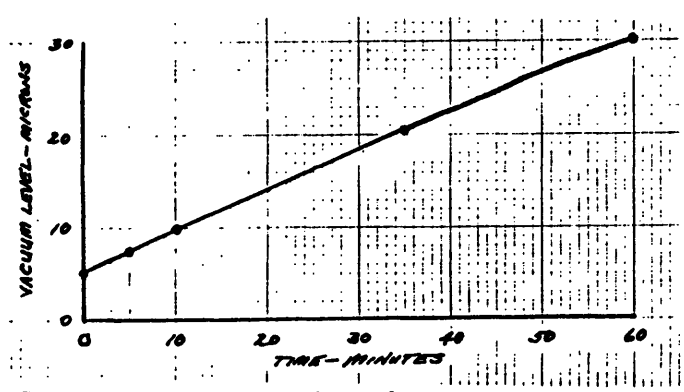

Dewar vacuum vs. time characteristics.

Figure 4

3. Refrigerator system characteristics.

Like Receiver No. 1, this receiver uses a Cryogenics Technology, Inc. (formerly A. D. Little, Inc.), Model 350 cryogenic refrigerator. The cold finger temperature is monitored with a Lake Shore Cryogenics, Inc., temperature sensor, Model DT-500, DI-8A, in conjunction with the temperature monitor system described in EDIR No. 204. Under normal conditions, the system will cool down from room temperature to approximately 11°K in about 4 hours. Lab tests in Green Bank showed the temperature stabilized at 11.1°K with a helium supply pressure at 250 p.s.i.

4. Low noise amplifiers.

All three amplifiers are cooled GaAsFET amplifiers and were designed and built at NRAO/Charlottesville. For detailed information concerning these components, refer to EDIR Nos. 202, 203, 220 and 222.

The L-band amplifier is a three stage amplifier housed in one package. It has a measured gain (including transmission lines inside dewar) of over 24 dB from 1.3-1.9 GHz. Noise temperature measurements obtained were less than 17°K from 1.2-1.8 GHz. (Refer to Figure 5A.)

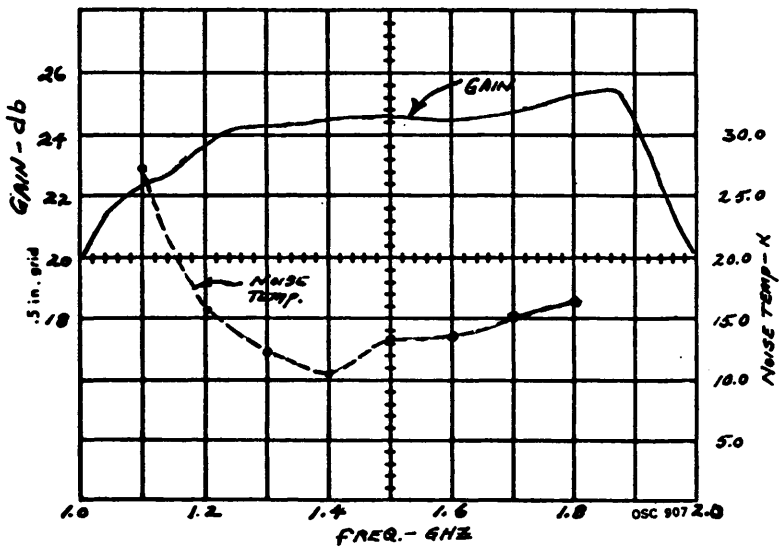

L-Band FET amplifier gain response and noise temperature measurements.

Figure 5A

The C-band amplifier consists of two separate stages independently packaged and connected together with an external cooled circulator. The overall gain of the C-band channel, including internal dewar input and output lines, is 23 dB at 5.0 GHz with a 3 dB bandwidth from 4.3-5.3 GHz. Measured values of gain and noise temperature are shown graphically in Figure 5B.

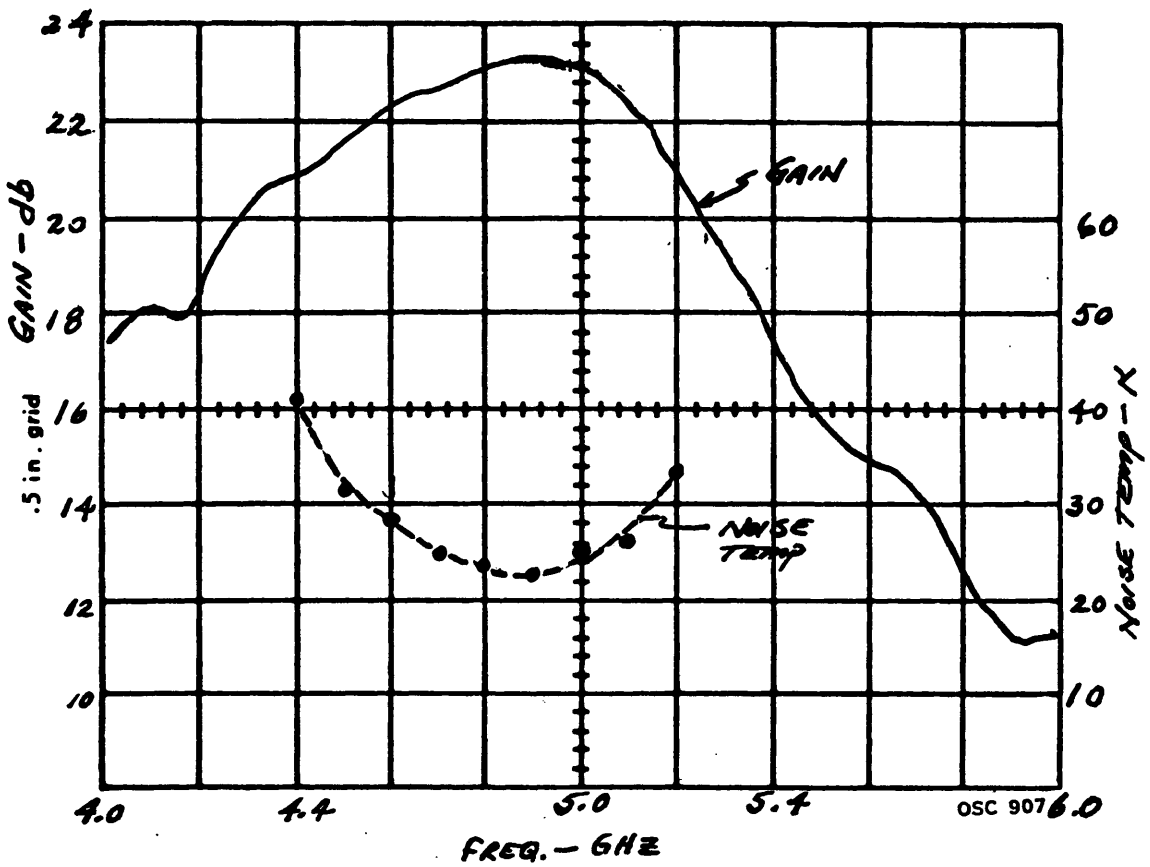

C-Band FET amplifier gain response and noise temperature measurements.

Figure 5B

The X-band amplifier contains three stages housed in one package. This amplifier also requires a cooled input circulator mounted external to the amplifier package. The overall gain of the X-band channel is approximately 28 dB at 10.7 GHz with a 3 dB bandwidth extending from about 10.0 to 11.0 GHz Noise temperature measurements at 10.7 GHz are less than 70°K. Refer to Figure 5C for gain response and noise temperature measurement data.

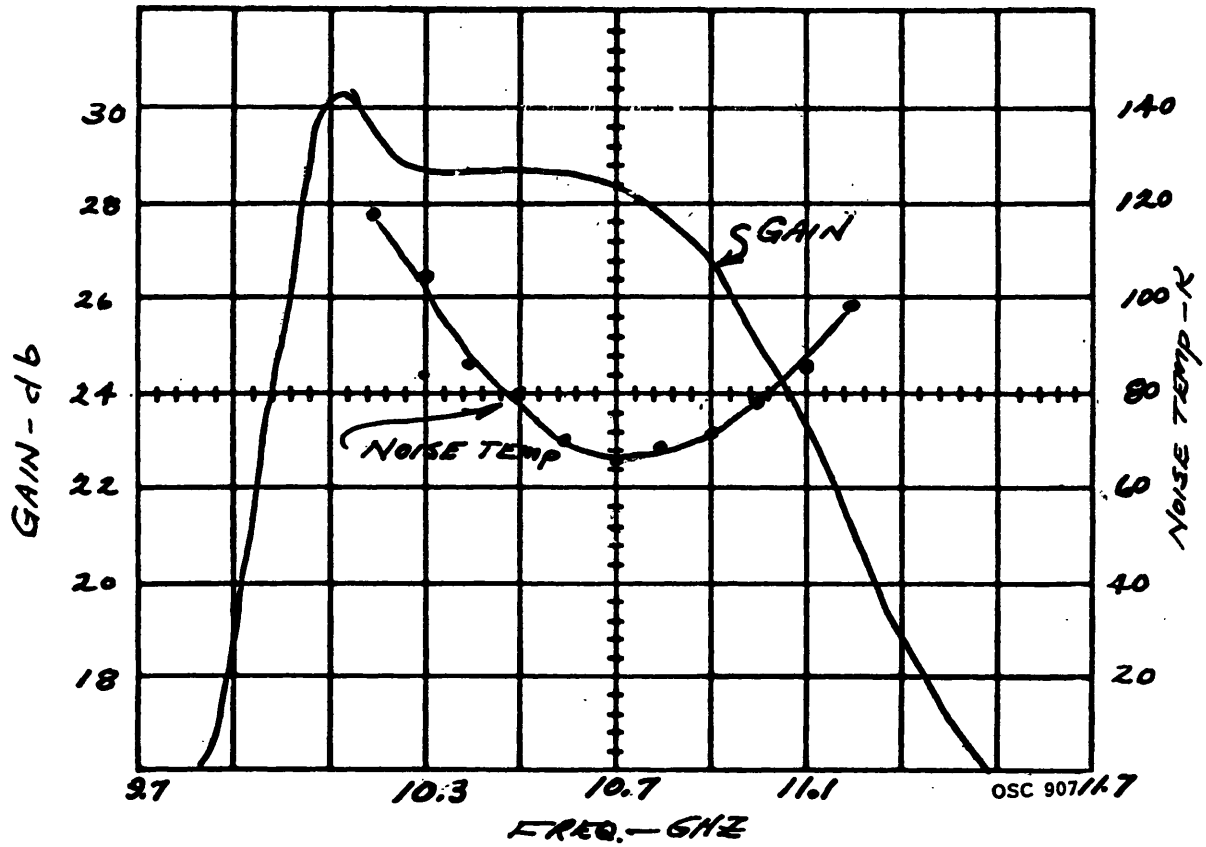

X-Band FET amplifier gain response and noise temperature measurements.

Figure 5C

5. Signal input lines.

In the case of both the C-band and X-band channels, the use of a thermal gap waveguide assembly was used for input lines. Each of these waveguide assemblies consists of two sections of waveguide in line with one another but with a .015" gap separating them. One section is tied to the 15°K station and the other section is connected to the dewar wall (300°K). The 0.015" gap provides thermal isolation between the 300°K section and the 15°K section, but still allows transmission of the signal to the amplifier with negligible electrical loss. To maintain mechanical stability and perfect alignment between the two sections of waveguide, dielectric rods of high thermal resistance are used. The dielectric material is synthane G-10.

The L-band input line is a coaxial device designed and built at NRAO in Charlottesville by S. Weinreb.

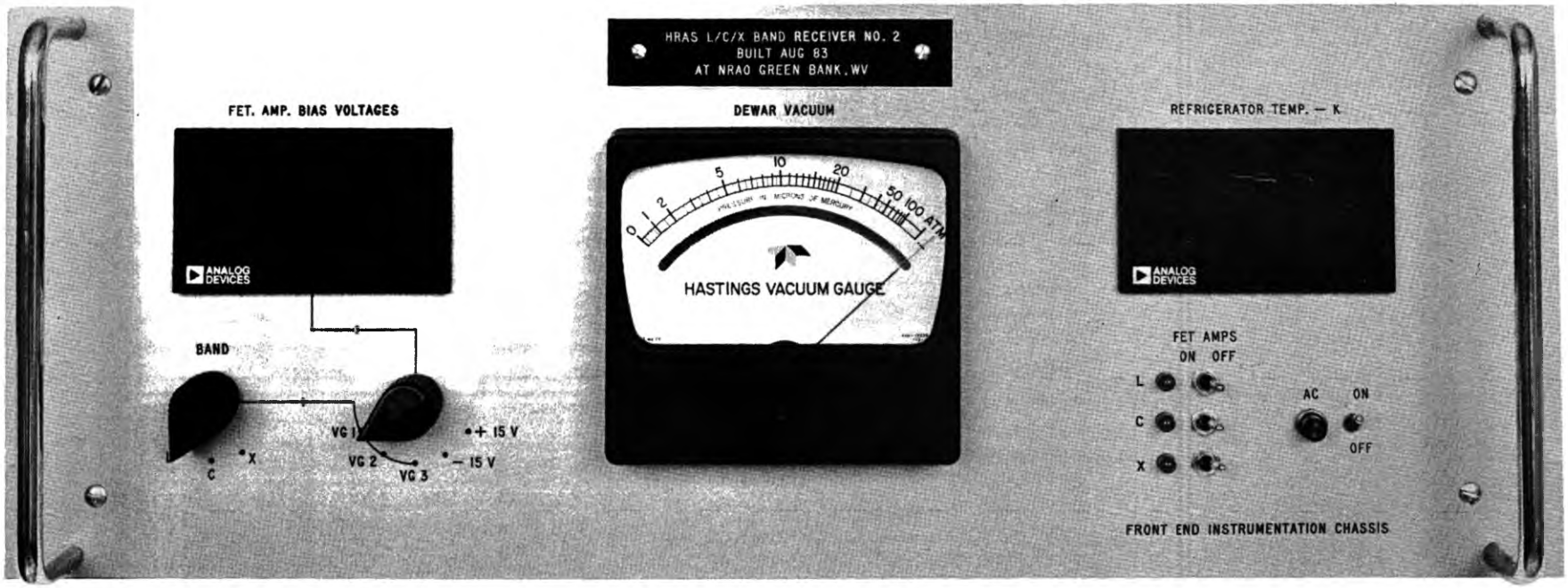

FIGURE 6A

Front-End Instrumentation Chassis, Front View

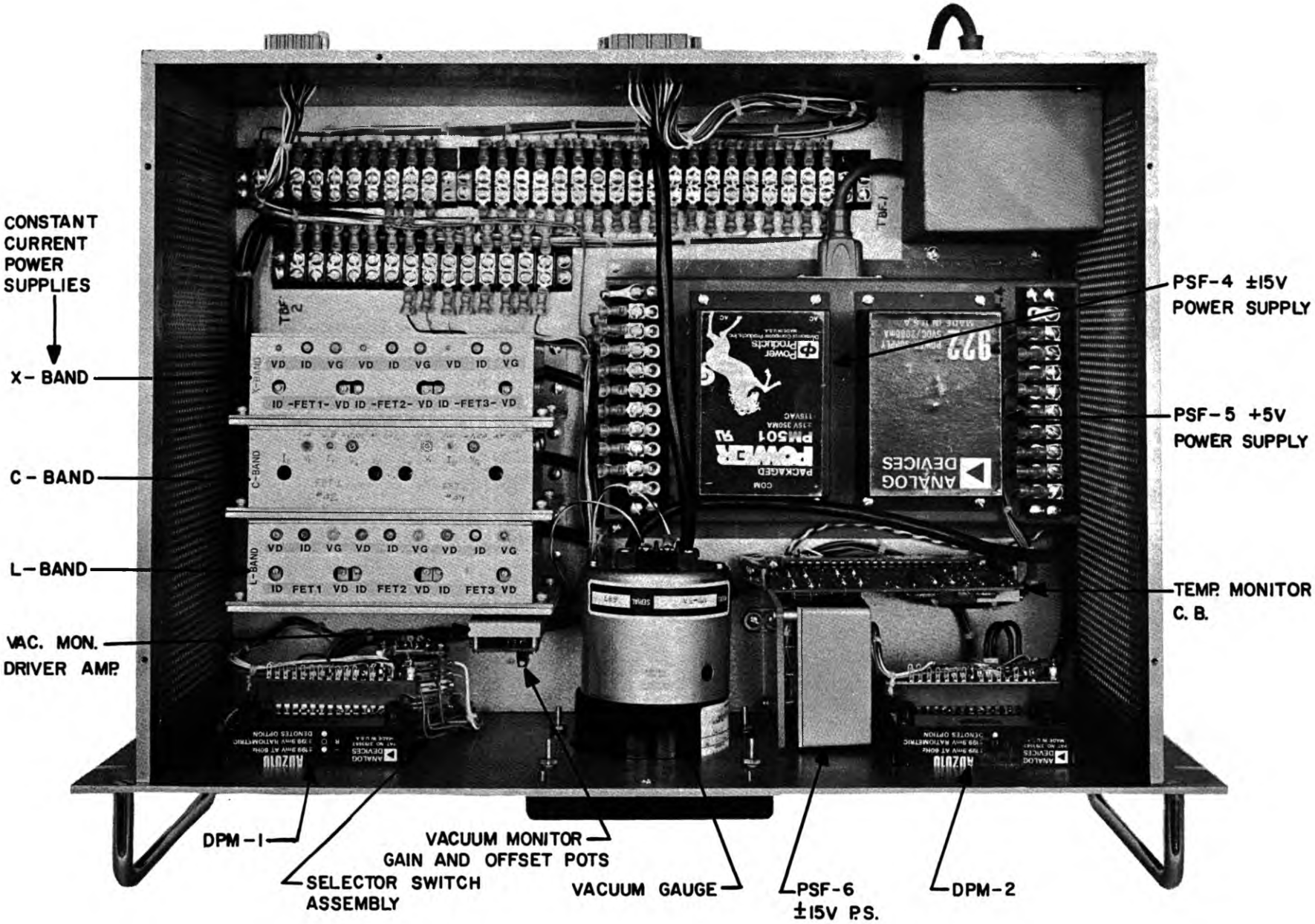

FIGURE 6B

Front-End Instrumentation Chassis, Top View with Cover Removed

Front-End Instrumentation Chassis (FEIC)

The FEIC (Figure 6) is installed near and connected to the vacuum dewar assembly. It supplies the various bias voltages for the FET amplifiers and also displays these voltages along with vacuum level and refrigerator temperature on the DPMS located on its front panel. The FEIC also provides signals to the CRMC so that refrigerator temperature and relative vacuum can be monitored from the control room. The wiring diagram of the FEIC is shown in Figure 7.

The components located in the FEIC include the following:

(1) The three constant current power supplies.

(2) The refrigerator temperature monitor circuit and its associated ± 15 V supply.

(3) The vacuum gauge and the vacuum monitor driver amplifier.

(4) The selector switch assembly.

(5) A ± 15 V power supply used to power the constant current power supplies.

(6) Two DPMS and the +5 V power supply which drives them.

1. Constant current power supplies.

The constant current power supplies contain identical circuits for each FET stage as shown in Figure 8. The L and X band unit contains three identical circuits in one housing, and the C-band unit contains only two such circuits. Each unit contains test jacks for monitoring the gate voltage, drain voltage, and drain current for each stage. In addition, the gate voltages may be read on one of the DPMS located on the front panel of the FEIC. For purposes of documentation, Tables 1 and 2 below show the values of these voltages measured at Green Bank during final tests. Departure from these values by more than 2% may indicate problems with the respective FET amplifier or its power supply.

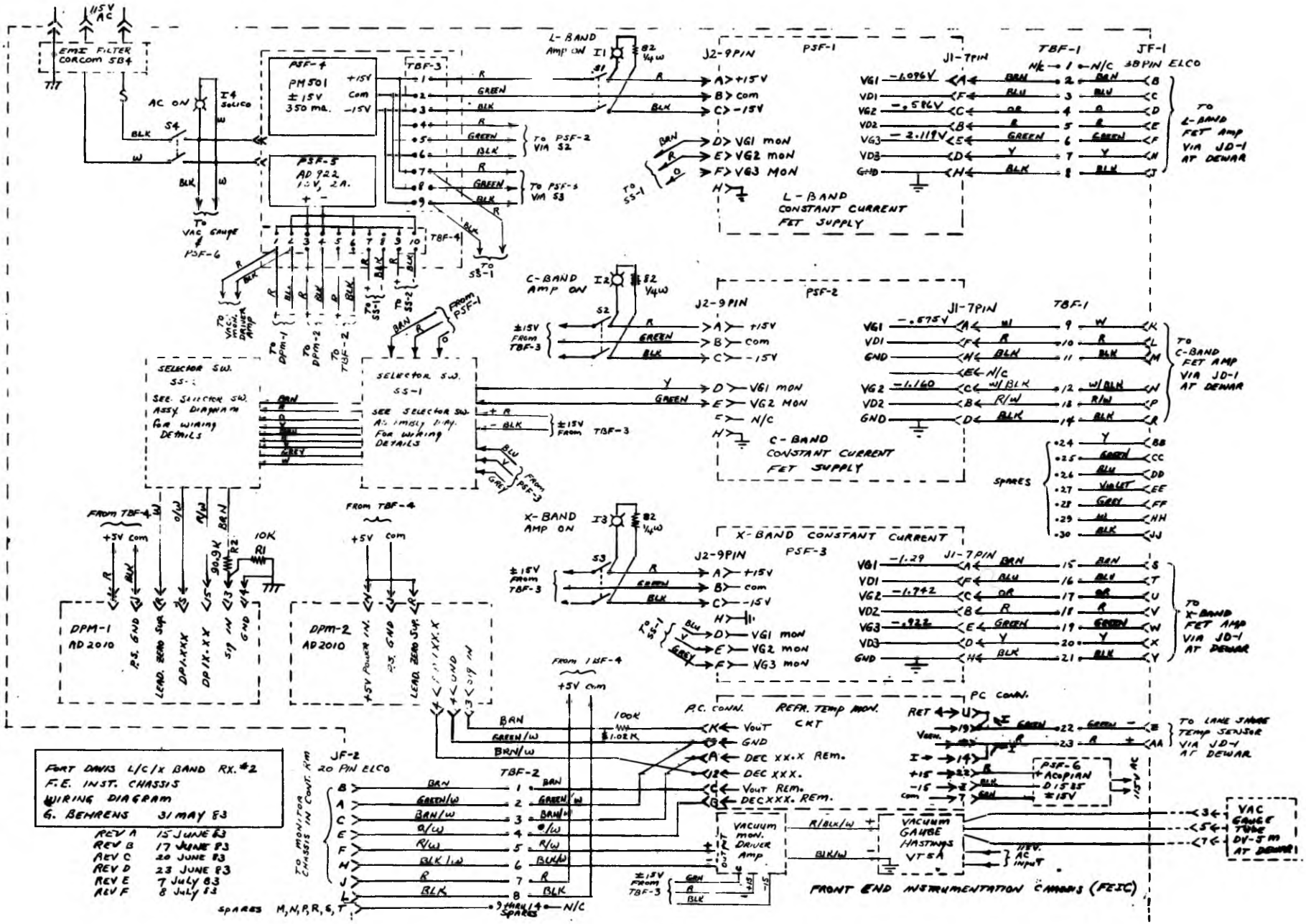

FIGURE 7

Front-End Instrumentation Chassis Wiring Diagram

CONNECTOR PIN ALLOCATION

J1 — 7 PIN — TO FET

A	VG1
B	VD2
C	VG2
D	VD3
E	VG3
F	VD1
H	GND

J2 — 9 PIN — PWR. & MONITOR

A	+15
B	GND
C	−15
D	VG1 MON.
E	VG2 MON.
F	VG3 MON.
H	+15 (GAIN TRIM POT)
J	ARM (GAIN TRIM POT)
K	−15 (GAIN TRIM POT)

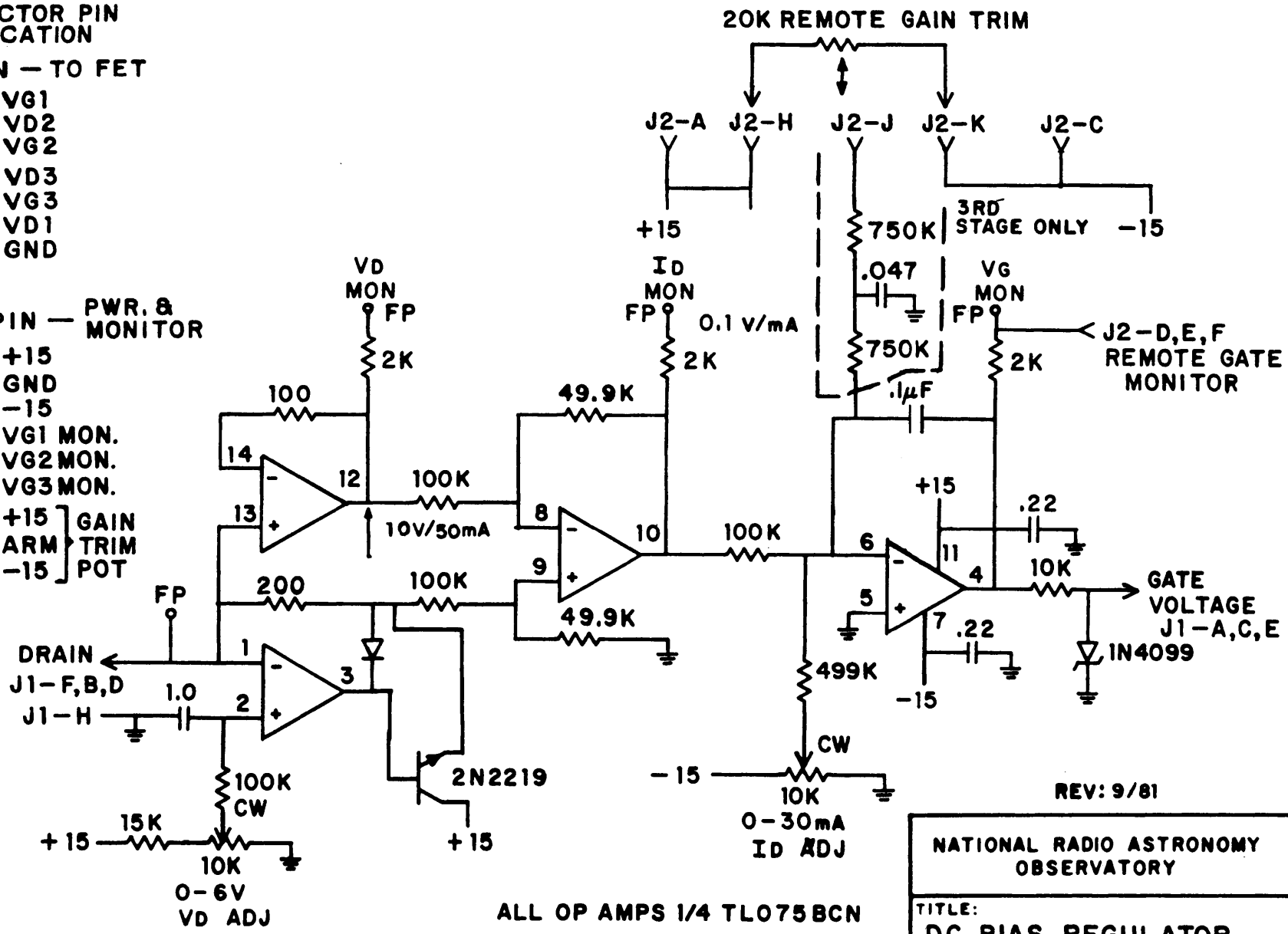

ALL OP AMPS 1/4 TL075BCN

CONSTANT CURRENT FET SUPPLY SYSTEM USE, 3 STAGE, WITH REMOTE GATE VOLTAGE MONITOR & GAIN ADJUST

REV: 9/81

NATIONAL RADIO ASTRONOMY OBSERVATORY	
TITLE: DC BIAS REGULATOR	
DSGN. BY: S. WEINREB	DATE: 6/19/80
APPD. BY:	DR. BY:

TABLE 1

Operating voltages for GaAsFET amplifiers measured at constant current power supplies.

Stage	Voltage	L-Band	C-Band	X-Band
First	Vd1	5.495	5.730	4.019
	Vg1	-1.081	0.956	-1.301
	VId1*	2.413	0.796	0.704
Second	Vd2	5.498	2.469	4.031
	Vg2	-0.592	-1.141	-1.725
	VId2*	1.306	0.990	1.011
Third	Vd3	4.071	None	4.025
	Vg3	-2.069	None	-0.896
	VId3*	1.003	None	1.005

*Note these voltages are related to drain current, Id, by the following expression: Id = VId x 10 mA.

TABLE 2

Operating gate voltages of GaAsFET amplifiers as read on DPM of FEIC.

Voltage	L-Band	C-Band	X-Band
Vg1	-1.062	-0.947	-1.277
Vg2	-0.581	-1.131	-1.692
Vg3	-2.060	None	-0.880

2. The refrigerator temperature monitor circuit.

The refrigerator temperature monitor is fully described in NRAO EDIR 204, "Temperature Readout Unit for Lake Shore Cryotronics Silicon Dio sors (DT-500 Series)."

3. The vacuum monitor system.

The dewar vacuum is continuously monitored with a Teledyne-Hastings-Raydist vacuum gauge, model number VT-5A and matching gauge tube DV-5M, which is mounted on the vacuum dewar assembly. A complete description of the VT-5A is covered in the manufacturer's operation manual. Besides providing an analog readout of vacuum level from 0.1-100 microns of mercury, the VT-5A also provides a DC voltage, inversely proportional to the pressure, which can be used for driving an external meter. However, it was found necessary to add the vacuum monitor driver amplifier, shown in Figure 9, between the VT-5A output and the DPM in the CRMC to eliminate loading effects of the DPM. During normal operation, the DPM in the CRMC will read 0 V at atmospheric pressure and 1.00 V with a hard vacuum. These values were obtained by adjustments at the VT-5A and the gain and offset pots on the vacuum monitor driver amplifier.

4. Selector switch assembly.

The selector switch assembly, whose wiring diagram is shown in Figure 10, permits the eight different gate voltages and the ± 15 V powering the constant current power supplies to be monitored from one DPM on the FEIC. It also provides the DPM with the necessary TTL signals for correct decimal information.

Control Room Monitor Chassis (CRMC)

The CRMC (Figure 11) provides a means to remotely monitor, from the control room, refrigerator temperature and relative vacuum of the vacuum dewar assembly. The CRMC should be connected to the FEIC with a multiconductor cable containing a minimum of eight conductors, although a cable with more conductors with spares is preferable. Wiring of the CRMC is shown in Figure 12.

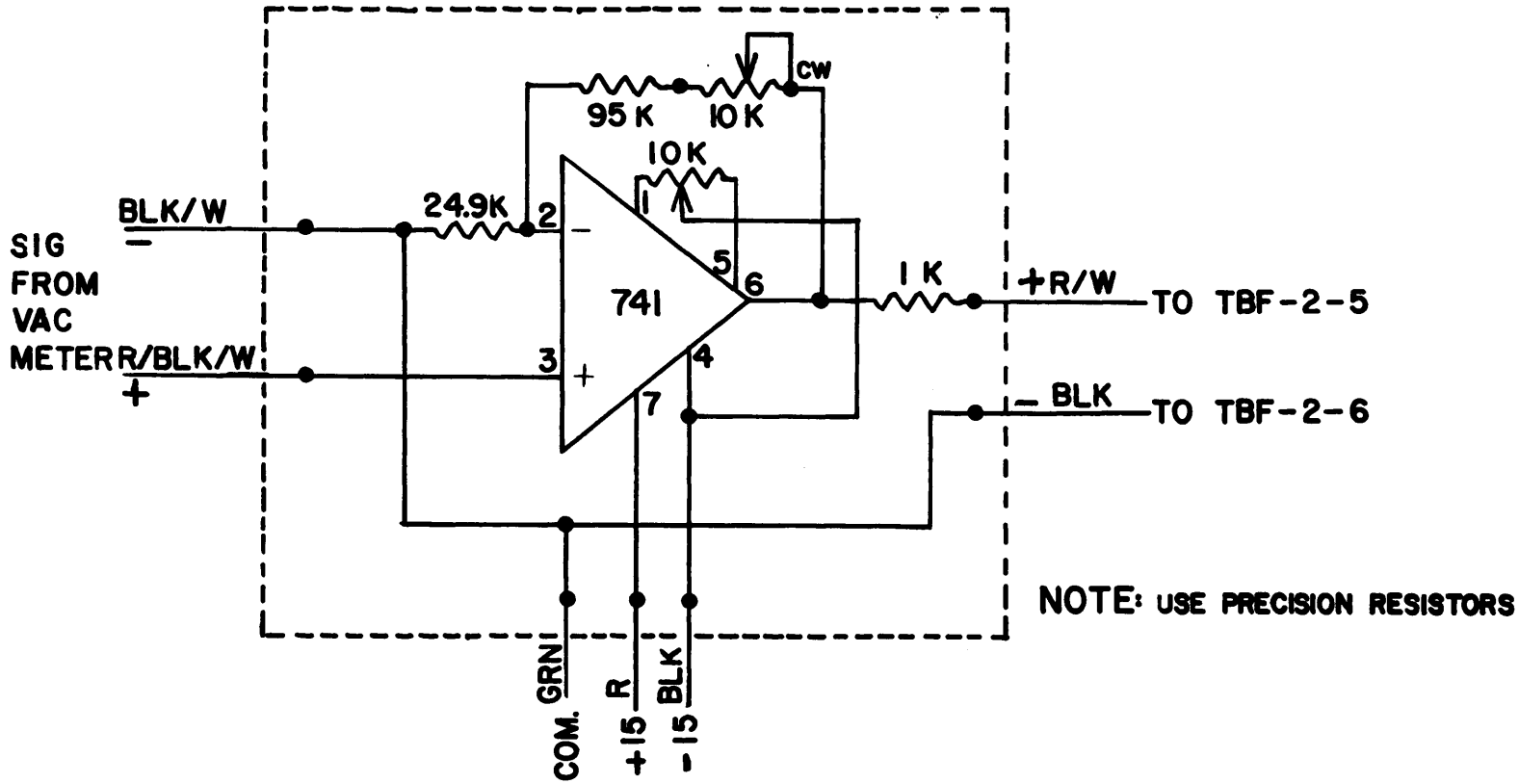

FIGURE 9

Vacuum Monitor Driver Amplifier

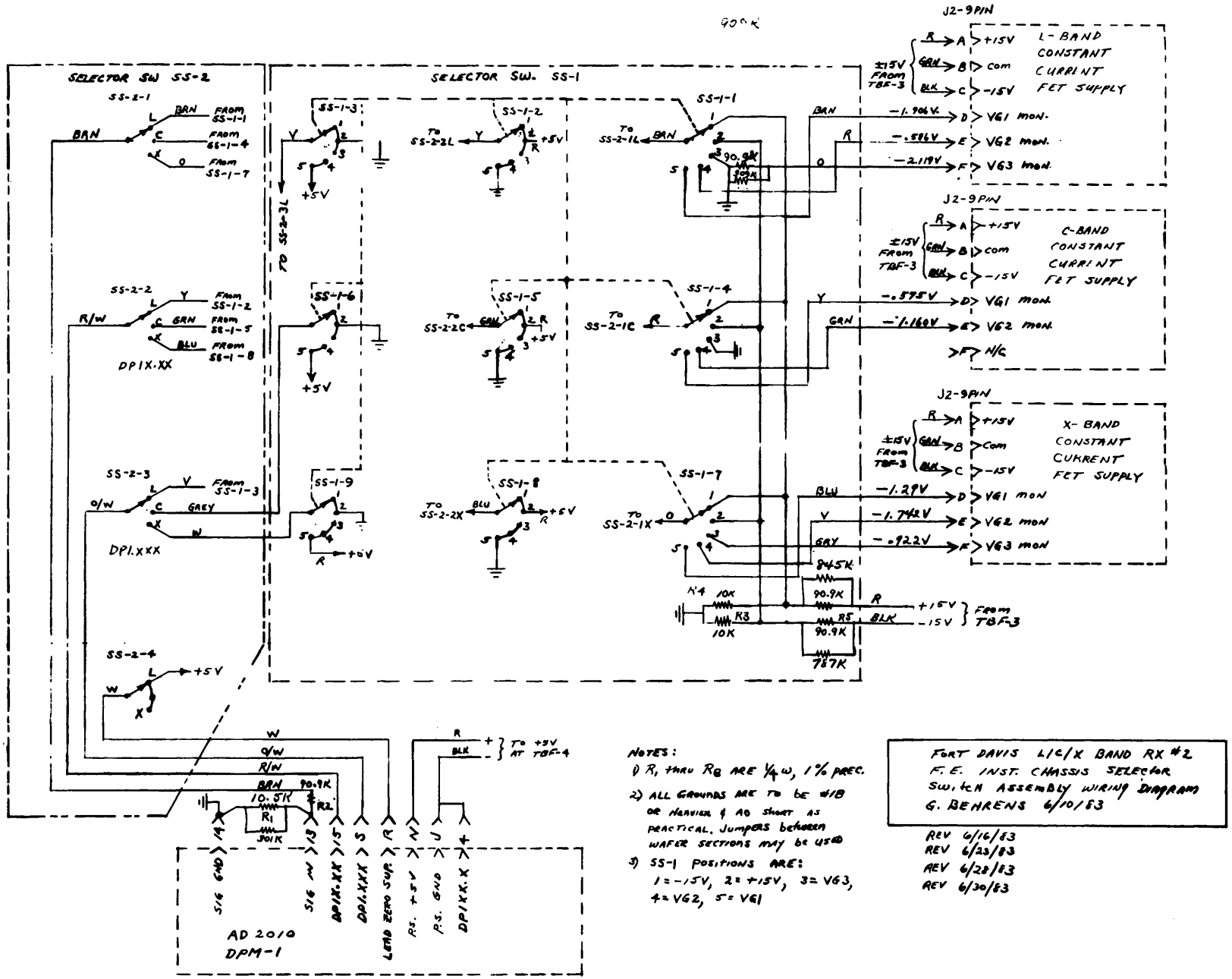
SELECTOR SW SS-2
SELECTOR SW. SS-1
J2-9PIN
L-BAND CONSTANT CURRENT FET SUPPLY
C-BAND CONSTANT CURRENT FET SUPPLY
X-BAND CONSTANT CURRENT FET SUPPLY
±15V FROM TBF-3
+15V
com
-15V
VG1 mon.
VG2 mon.
VG3 mon.
N/C
DP1X.XX
DP1.XXX
AD 2010 DPM-1
SIG GND
SIG IN
DP1X.XX
DP1.XXX
LEAD ZERO SUP.
P.S. +5V
P.S. GND
DP1XX.X
To +5V AT TBF-4
NOTES:
1) R1 thru R8 ARE 1/4 w, 1% PREC.
2) ALL GROUNDS ARE TO BE #18 OR HEAVIER & AS SHORT AS PRACTICAL. JUMPERS between WAFER SECTIONS may be USED
3) SS-1 POSITIONS ARE: 1=-15V, 2=+15V, 3=VG3, 4=VG2, 5=VG1
FORT DAVIS L/C/X BAND RX #2
F.E. INST. CHASSIS SELECTOR SWITCH ASSEMBLY WIRING DIAGRAM
G. BEHRENS 6/10/83
REV 6/16/83
REV 6/23/83
REV 6/28/83
REV 6/30/83

FIGURE 10

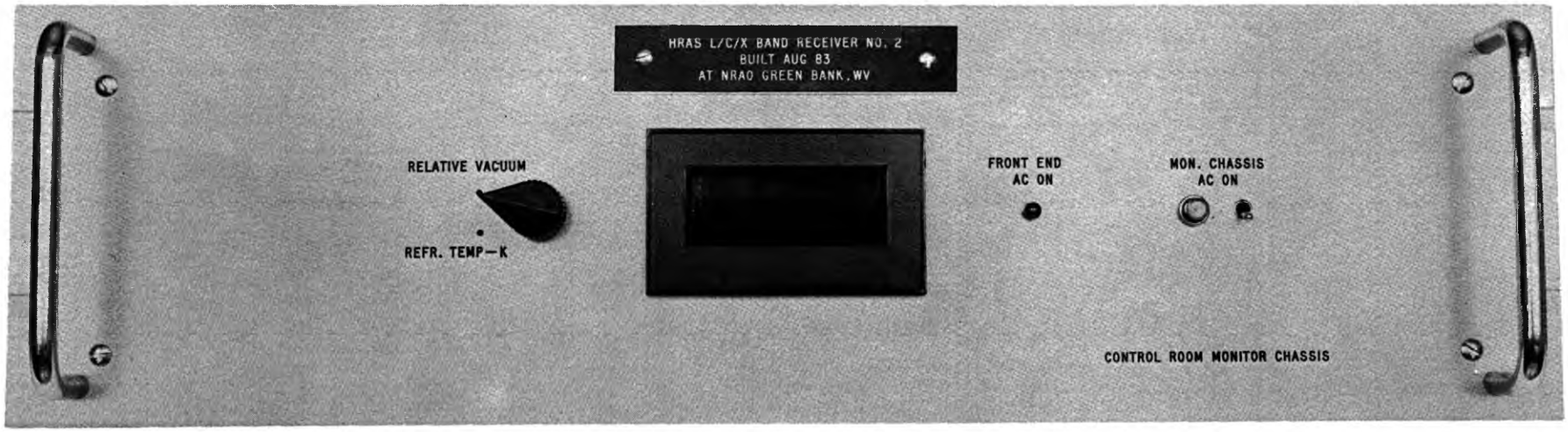

FIGURE 11A

Control Room Monitor Chassis, Front View

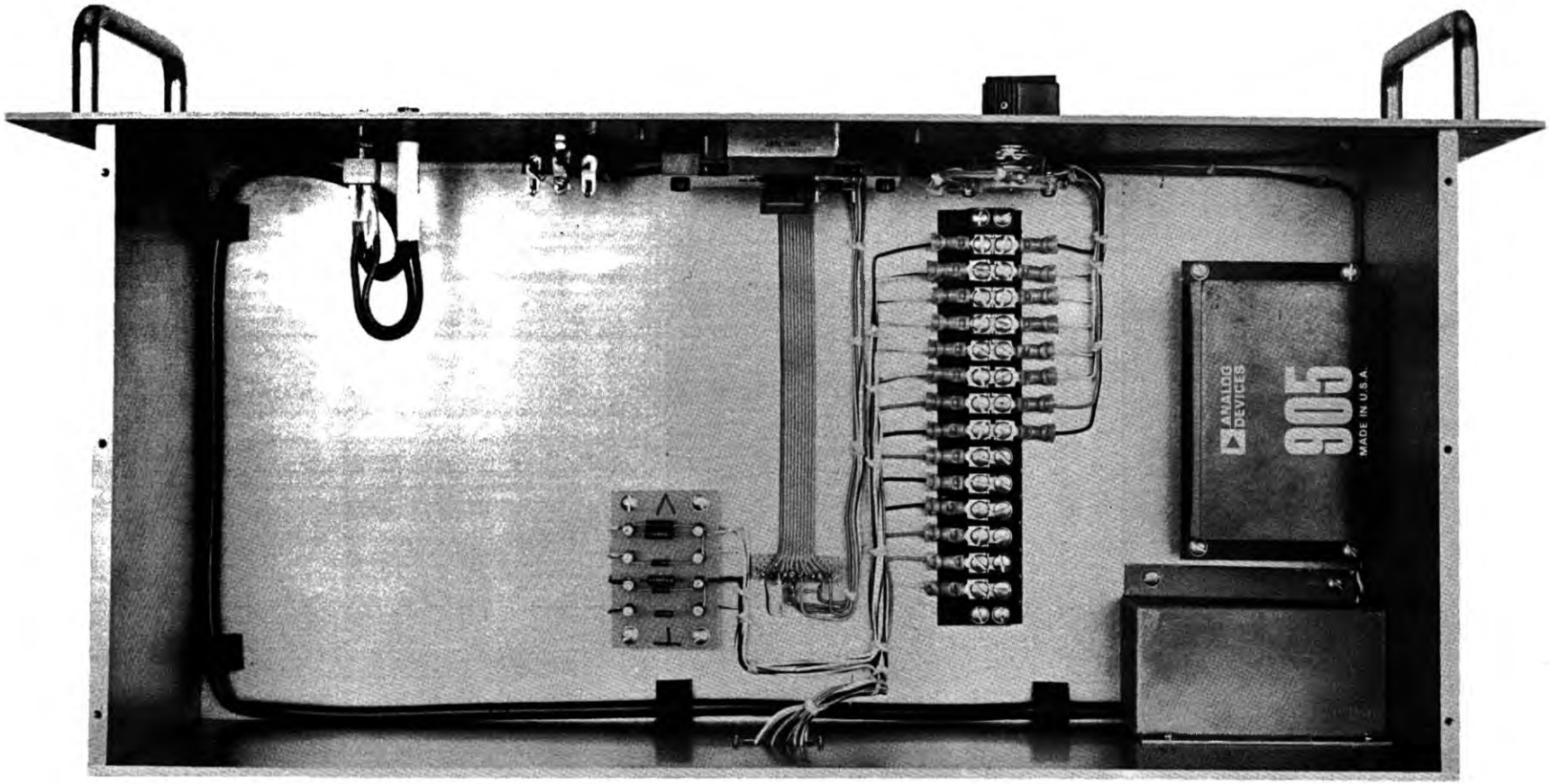

FIGURE 11B

Control Room Monitor Chassis, Top View with Cover Removed

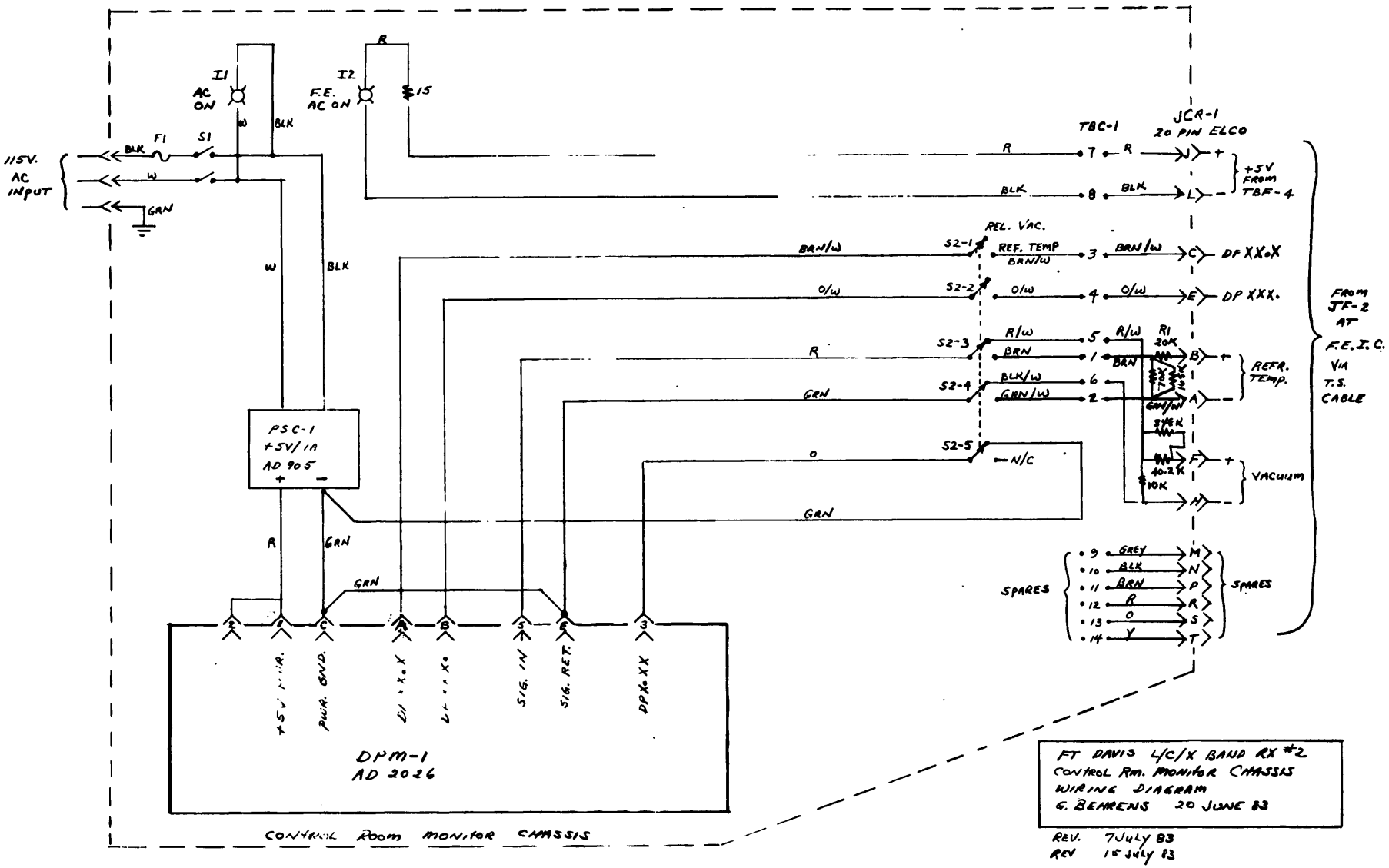

FIGURE 12

Control Room Monitor Chassis Wiring Diagram