GBT memo No. 292

Specifications for the GBT spectrometer

Authors: D. Anish Roshi[1], Green Bank Scientific Staff, J. Richard Fisher[2], John Ford[1]

Affiliation: [1] NRAO, Green Bank, WV 24944. [2]NRAO, Charlottesville, VA 22903

Date: December 13, 2011, (v0.3)

Abstract

The specifications for the GBT spectrometer are discussed in this report. This spectrometer will be built by the CICADA collaboration using CASPER technology.

1 Introduction

A new spectrometer is being designed for the Green Bank Telescope (GBT). This spectrometer project is funded by the NSF ATI program and is being built by the CICADA collaboration. The new backend replaces the existing GBT spectrometer.

A block diagram of the spectrometer is given in Fig. 1. One of the requirements of the spectrometer is to process data from the existing 7 dual polarized beams of the K-band (18 to 26.5 GHz) focal plane array (KFPA). The data processing includes measuring the spectra and developing a uniformly gridded map of the observed region. This requirement can be taken care of by having 7 independent spectrometers working in parallel for measuring the spectra followed by a high performance computer to do the software processing to make the map. In the block diagram we have shown 8 spectrometers (7 + 1 spare system), which are connected to the Converter Racks outputs of the GBT. The spectrometer can broadly be divided into two parts: (1) FPGA based hardware and (2) pipeline computing facility. We plan to use CASPER's ROACH board for the FPGA based hardware. The pipeline computing will be implemented using a cluster computing facility hereafter referred to as HPC.

2 Spectrometer Specifications

The new backend will have 8 spectrometers working in parallel (see Fig. 1). The specifications can be broadly divided into three parts – (1) the specification for each of the 8 spectrometers; (2) specification for the number of intermediate frequencies (IFs) to be processed and (3) specification for the HPC. These are summarized in Table 1 and 2. The science requirement considered for arriving at these specifications are briefly discussed here (see also Lockman 1992).

2.1 Spectrometer outputs

Each spectrometer should be capable of processing signals from two IFs. These two IFs will be nominally connected to the two polarizations (linear or circular) of a receiver. For many observations we need only the self spectral powers from both or one of the IFs. For polarization observations

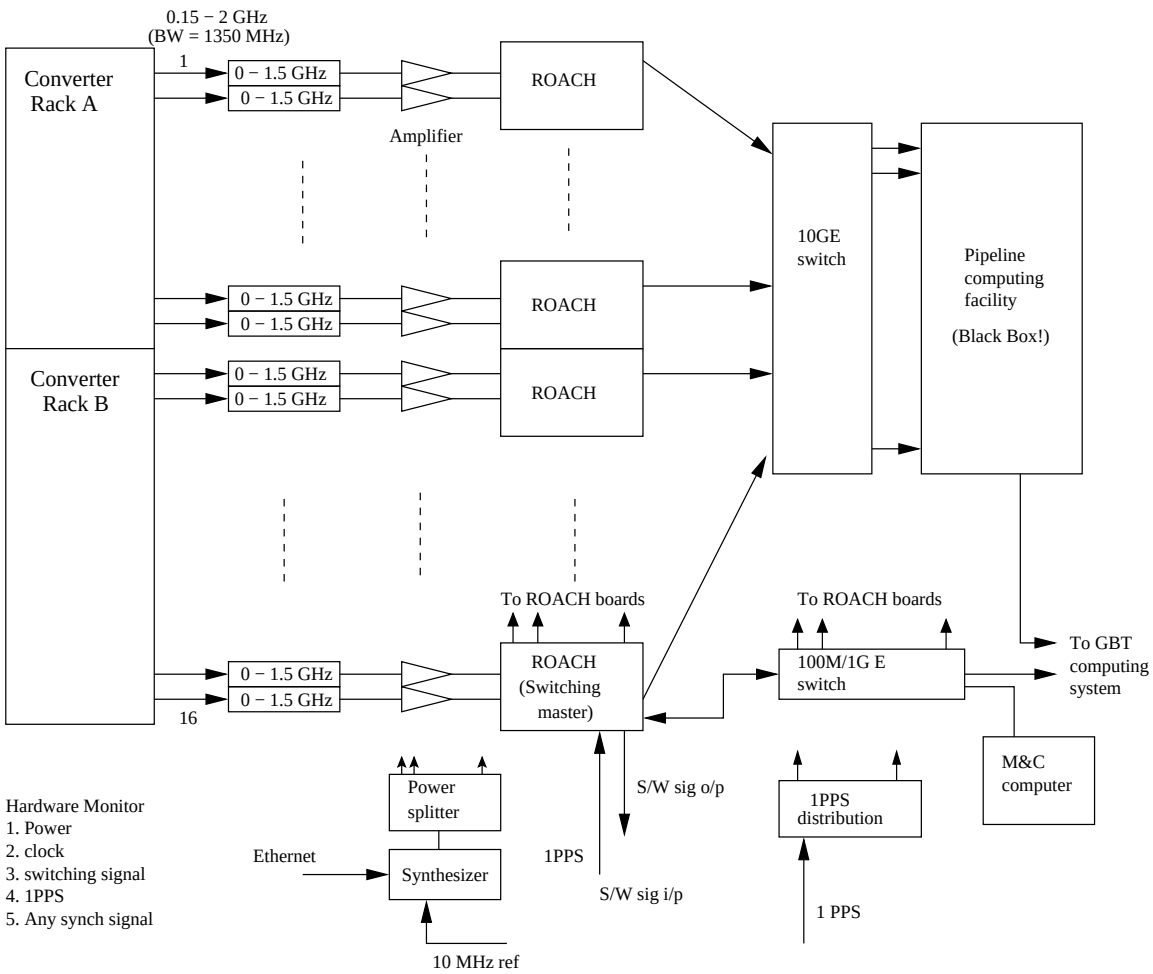

Figure 1: A schematic of the new GBT spectrometer

full Stokes (I, Q, U, V) measurement is needed. The cross spectral power of the two IFs need to be measured to obtain the Stokes parameter. The self and cross spectra can be measured in the ROACH for all modes of observations. We will keep 32 bit resolution for these spectral measurements. The spectra are sent to the HPC where the Stokes parameters are computed if required by the observations. The self power (one of the selfs or both) or stokes parameters are written to SDFITs file for most of the observations and the data is stored as FITs images for KFPA mapping observations.

2.2 Switching signals

A reference measurement for spectroscopic observations is usually made by position or frequency switching. In addition, gain variations during the observation are measured by periodically injecting calibrated noise source. The waveform for 'cal' (calibration) and 'pos' (position) switching is shown in Fig. 2. For most observations the 'off' time can be same as 'on' time (see Fig. 2). The minimum time for freq 'on' time is obtained from KFPA observing consideration. The spectra for these observations has to be dumped at 100 msec rate. This time is decided by the sampling of the KFPA beams when the telescope is moved at a rate of 1.7°/min for mapping observations (see Subsection 2.7). In frequency switching mode, observations have to be made at two local oscillator

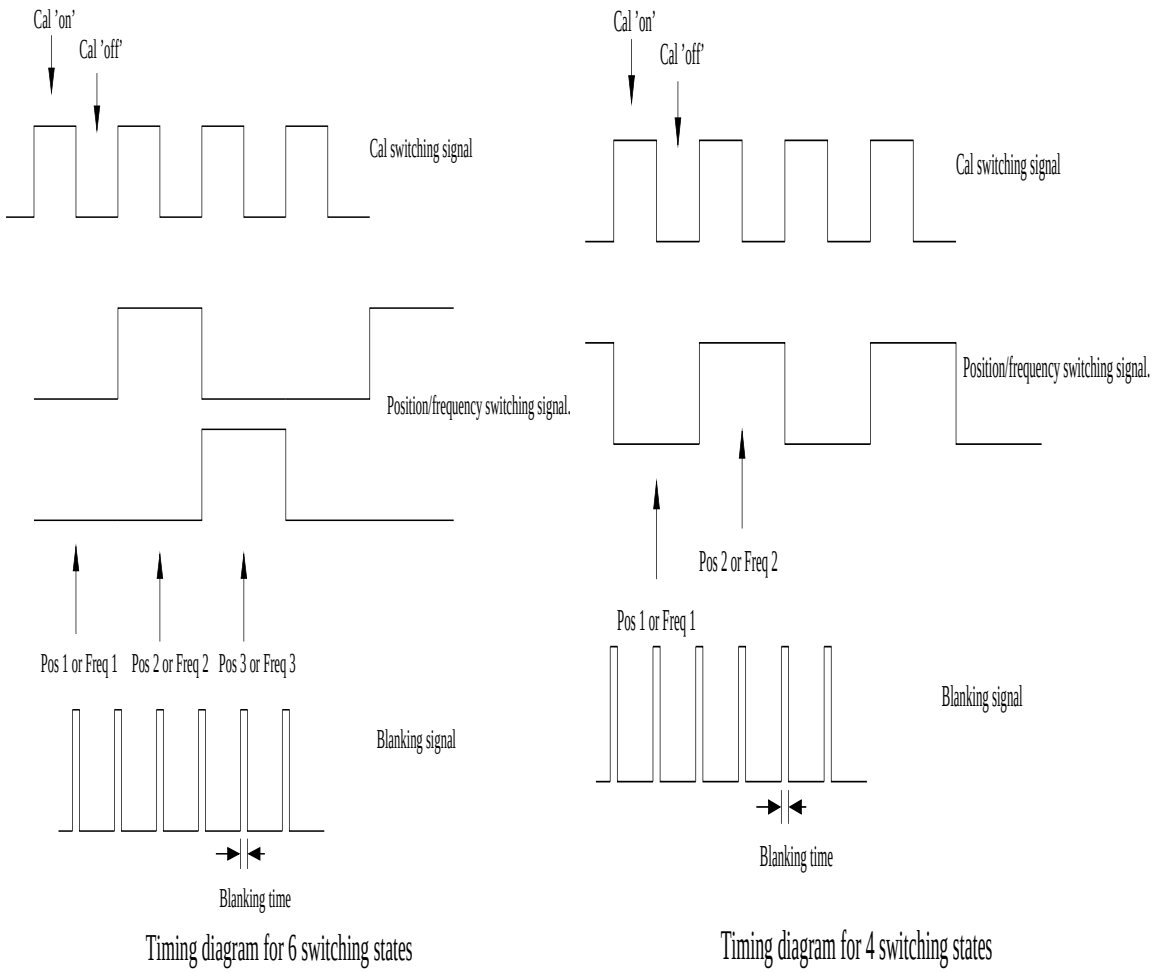

Figure 2: Switching signal waveform

(LO) frequencies switched within 100 msec. This consideration gives a minimum time of 50 msec for a dual-Dicke frequency switched observation. We also specify the minimum time for position switched observations as 50 msec. There should be a cal switching cycle within the 50 msec 'on' time of position and frequency switched observations (see Fig. 2), which gives a minimum for cal 'on' time as 25 msec. During the switching of cal signal, frequency and position the data need to be 'blanked' to give time for the receiver system to settle to the desired state (see Fig. 2). The blanking time for various types of switching is different and should be programmable. The minimum blanking time can be 0.5 ms, set by the cal switching, and maximum is 5 sec, set by position switching. The 'on' time specified above includes one blanking period. The maximum switching time is decided by the longest integration which is about 2 sec. So the longest freq/position 'on' time is about 1 sec. There should be an equal, integral number of cal cycles within the 'on' time for freq/pos switching. Therefore the maximum cal 'on' time is 0.5 sec.

Frequency switching may have to be done on both sides of the observing frequency for some observations. This mode of operation needs 6 switching states. So the maximum number of switching states is specified as 6. The minimum number of switching state is 1, which will be used for observations that do not need reference or cal switching.

A 'look ahead' switching signal is desired. This signal can be a copy of the switching signal advanced in time by an amount programmable between 0.1 and 1 sec.

For some observations, the switching and blanking signals are generated externally. The spectrometer should synchronize its operation with these external signals.

The basic unit of the switching time can be integral multiples of the inverse of the spectral resolution. Thus an integral number of polyphase filter lengths will be present within the 'on' time as well as the blanking time.

2.3 Isolation between IFs

The spectrometer will be processing signals from different IFs and hence any cross coupling between IFs in the spectrometer should be minimized. For non-polar observations an isolation of 20 dB will be sufficient. The isolation for polarization observations is more stringent. The low-frequency (< 1.4 GHz) feeds have polarization isolation better than 35 dB and so we specify the IF isolation should be > 35 dB. Since the percentage polarization of astronomical sources are $\leq$ a few percent, 35 dB isolation will not be sufficient for polarization measurement. So an additional requirement will be that the coupled power should not change by $> 1\%$ over 1 hour, the time scale to do calibration observations.

2.4 Bandwidth to be sampled

For most extragalactic spectral line observations a maximum velocity coverage of $\sim$3000 km s^{-1} is adequate. This velocity range corresponds to about 900 MHz at 90 GHz (approximate upper frequency of operation of the upcoming W-band). The Converter Rack of the GBT has a lower cut-off frequency of about 150 MHz. We specify a minimum bandwidth of 1050 MHz to be sampled so that the usable 900 MHz bandwidth can be processed digitally. The bandwidth needed for different observations can be smaller than the sampled band as discussed below. These smaller bandwidths have to be made available by filtering and digital down conversion.

As discussed in Subsection 2.8 we plan to use National semiconductor's ADC083000 integrated circuit. This will be clocked at 3 GHz to get the digitized bandwidth of 1500 MHz. Considering the specification of anti-aliasing filter (see Table 1) and the lower frequency cutoff of the Converter Rack the usable bandwidth will be 1250 MHz.

2.5 Observing bandwidth and Spectral resolution

Astronomical observations need a variety of velocity resolutions and velocity ranges. The highest spectral resolution needed would be for maser observations, which is ~ 0.01 km s^{-1} . This resolution corresponds to 55 Hz at the OH 1665.4018 MHz maser transition frequency. We will specify 50 Hz as the minimum frequency resolution. The velocity range needed for maser observations is < 100 km s^{-1} , which corresponds to 555 KHz at 1665 MHz. Considering dual Dicke frequency switching we will need a minimum bandwidth of about 1 MHz. The spectral channels needed for such an observation is 20,000; the nearest 2^n value will be 32768.

The largest bandwidth needed is for extragalactic spectral line observations; for example ^{12}CO observations. These observations need a velocity coverage of about 3000 km s^{-1} and spectral resolution of 5 km s^{-1} . Near 90 GHz this corresponds to a bandwidth of 900 MHz and 1.5 MHz giving the number of spectral channels as 600. We will specify 1024 channels over the sampled bandwidth.

The highest spectral resolution for extragalactic work is needed for H_2O maser observations at 22 GHz. The velocity range and resolution needed are about 5000 km s^{-1} and 0.3 km s^{-1} respectively. These values correspond to $\sim$ 370 MHz and 22 KHz at 22 GHz and the number of channels needed is 16700. We will specify 16384 channels over the required bandwidth for these observations.

The summary of the specification for the bandwidth and number of channels is given in Table 2. We arrived at these specifications by considering the requirements of the observations described above and other possible observations that can be made with the GBT.

2.6 Sub-band requirement

Many spectroscopic observations require higher spectral resolution over multiple narrow bands (sub-bands) within the sampled bandwidth. For example, there are 30 recombination line transitions within the 240 MHz bandwidth of PF1 band (RF center frequency 342 MHz) and it may be required to observe all these transitions simultaneously to reduce the integration time. Many of these transitions near 342 MHz are affected by RFI. Another observation where multiple transitions have to be observed simultaneously is NH_3 observations near 22 GHz. The physical conditions of molecular cloud can be obtained by observing multiple transitions of, for example, NH_3 (J = K and J $\neq$ K transitions) lines. There will be about 9 transitions within the usable bandwidth (1.25 GHz see Section 2.4). Observing all these transitions simultaneously will be useful for modeling the properties of the cloud. Considering the recombination line and NH_3 observations we specify the number of sub-bands needed is 8.

The required bandwidth of each sub-band and the number of channels per sub-band varies with observations. For galactic recombination line observations at 342 MHz, the bandwidth required would be $\sim$ 1 MHz for dual Dicke frequency switching. This will give a velocity coverage of $\sim$ 500 km s^{-1} for each LO frequency setting. The resolution needed is about 0.5 km s^{-1} for carbon recombination line observations, which means that the total number of channels over 1 MHz is about 2000. The NH_3 observations need about 100 km s^{-1} velocity range, which corresponds to $\sim$ 7 MHz at 22 GHz. For dual Dicke frequency switching the bandwidth needed will be 14 MHz. The spectral resolution needed is about 0.04 km s^{-1} , which corresponds to $\sim$ 3 KHz at 22 GHz. The total number of spectral channel needed per sub-band is $\sim$ 4700. We specify 4096 channels.

A summary of the specification for sub-band modes is given in Table. 2. The sub-bands can be of equal bandwidths but spaced anywhere in the digitized bandwidth. The center frequency of the sub-band need to be tuned with an accuracy of $\sim$ 10 km s^{-1} , which corresponds to $\sim$ 10 KHz at the observing frequency of 342 MHz.

2.7 Integration time in the hardware and disk data rate

The minimum integration time for KFPA imaging is determined by two factors: (1) telescope scanning rate and (2) sampling of the telescope beam. The KFPA beam is $\sim 30''$ and has to be sampled at $\sim 10''$ for optimum SNR (Mangum et al. 2007). The desired scanning rate for these observations is 1.7°/min. Therefore the spectra has to be dumped at $\sim$ 100 msec. We will specify 100 msec for the KFPA mapping observations. The mapping need to be done with dual-Dicke frequency switching and hence 4 spectra corresponding to the four states have to be read out of the spectrometer in 100 msec. The maximum number of channels that has to be read out is 32768. Therefore the data rate to disk for full polarization and 4 switching state observation is 20 MB/sec

The stellar cyclotron maser instability (CMI) observation with the GBT requires about 100 MHz bandwidth and 10 KHz resolution (Robert Mutel 2010, private communication). The spectrometer mode that is suitable for these observation is 32768 channel and 100 MHz (see Table 2). The time resolution needed for the CMI observation is 5 to 50 msec. We take 10 msec as the specification. During this integration time no cal signal need to be injected and so there will be only 1 switching state. The CMI signals are highly polarized and hence need full polarization observation. The data rate to disk for full polarization observation is 50 MB/sec.

The pulsar mode needs the spectra to be dumped to disk at high time resolution. The pulsar mode is a low priority mode for the current spectrometer and so software support for on-line folding and dedispersion is not available. However, we provide a modest pulsar facility with the current spectrometer. In this mode we will have a minimum integration time of 0.5 msec and 2048 spectral channels in full polar mode. The number of switching states needed is 1 and therefore the data rate to disk in full polar mode observation is 63 MB/sec.

The longest integration needed in the hardware is about 2 sec for spectroscopic observations. Further integration of the spectra can be done in the HPC before writing the data to disk.

From the observing considerations discussed so far we specify : (1) the minimum integration time in the hardware needed is 0.5 msec with 1 switching state for number of spectral channels ≤ 4096; (2) the maximum integration time needed in the hardware is 2 sec with 1 to 6 switching states; (3) the minimum integration in the hardware needed for 4 switching state is 100 msec and for 6 state is 150 msec; (4) The maximum data rate to disk is 100 MB/sec.

2.8 RFI consideration and Spurious signal level

The RFI scans provided by the GBT operators show narrow band RFI with power level proportional to 10^3 to 10^4 Tsys*$\Delta\nu_m$ in PF1 and PF2 bands (see http://www.gb.nrao.edu/IPG/rfiarchivepage.html). Here Tsys is the system temperature of the corresponding bands and $\Delta\nu_m = 12$ KHz is the resolution of the measured spectra. Typical peak RFI level is close to 10^3 Tsys*$\Delta\nu_m$. Many low-frequency (ie PF1 and PF2 bands) observations are made with a spectral resolution, $\Delta\nu$, of about 1 KHz. We calculate the required power level of any spur due to the narrow band RFI at $\pm$ 1 KHz away from the channel where RFI is present. The requirement for the spur level is set such that the level is about 10 times below the RMS noise for spectroscopic observations with integrated time, τ, of 12 hrs. The spur level in dB below the RFI power is then given by

$$A_{dB} = 10log\left(10^{-4} \times \sqrt{\frac{\Delta\nu}{\tau}} \times \frac{1}{\Delta\nu_m}\right) \tag{1}$$

The value of A_{dB} we get is about -89 dBc for the spectral resolution and integration time mentioned above. For ADC therefore the full scale spurious free dynamic range (SFDR) should be 89 dB. As seen in the spectrum there are multiple RFI and so the ADC can produce intermodulation products (IMD). The intermodulation produced by the ADC should also be below ~ -89 dBFS.

For the spectrometer we have decided to use an existing ADC board since the time scale of the project does not allow the development of an ADC with the above specifications. We plan to use National semiconductor's 083000 IC for the ADC. The minimum SFDR and IMD of this ADC is $\sim$ 52 dB and -52 DBFS respectively.

2.9 Filter responses

Both digital and analog filters will be used in the spectrometer. The anti-aliasing filter (see Fig 1) is an analog filter and its specification is listed in Table 1. There will be two digital filters needed – (1) for digitally reducing the bandwidth with can be similar for the sub-banding application and (2) spectral response filter of the polyphase filter bank. These are also specified in Table 1. The stop-band attenuation (90 dB) of the polyphase filter response is obtained by the RFI rejection consideration discussed in Subsection 2.8.

2.10 DDC LO Spur level

16 bit quantization for the cosine and sine wave will be sufficient for the spectrometer.

2.11 Number of IFs

The ADC is required to process data from 7 dual-polarized beams of the KFPA receiver system. This corresponds to 7×2 IFs. Including the spare beam the spectrometer has to process a total number of 16 IFs.

2.12 Software processing in the HPC

The HPC component of the spectrometer needs to implement the following observing modes. (1) Mapping observations with the KFPA and the associated data processing to produce the maps in quasi-real-time mode; (2) A single or 8 beam dual polarized observations; (3) A single beam dual polarized pulsar observation in search mode; (4) monitoring the health of the spectrometer. A summary of the computations involved in each of these observing mode is given below.

The operations involved in the KFPA data processing are:

- Reading the 4 state integrated spectra corresponding to each IF and the cross correlation of an IF pair from each ROACH board every 100 msec (or 6 states in 150 msec). The maximum number of channels to be read is 32768. These channels can be spread across 8 sub-bands.
- Compute the Stokes parameters if polarization observation is made with the KFPA.
- Estimating the system temperature as a function of frequency from off-source spectra. This will be done for the two frequencies while frequency switching. Typically there are two off-source measurements and at the end of observations an interpolation of the two system temperatures need to be made.
- Compute the antenna temperature from the 'on/off' measurements for each beam. Apply corrections on the antenna temperature to get either T_A^* or T_B.
- Doppler tracking for each beam and each sub-band.
- The data from each beam and each sub-band to be gridded in such a way that the RA and DEC coordinates are uniformly sampled.
- Get the gridded data from all the beams and make the map. Store this map as a FITS image.

The operations involved in the single or 8-beam observations are:

- Reading up to 6 states of integrated spectra corresponding to each IF and the cross correlation of an IF pair from each ROACH board. The integration time in ROACH can be in the range 100 msec to 2 sec. The maximum number of channels to be read is 32768. These channels can be spread across 8 sub-bands.
- A second reading mode where the data from the spectrometer will be read and written to disk every 10 msec to 100 msec depending on the specified hardware integration time. The state signal will be embedded in the data packet sent by the spectrometer. The maximum number of channels that the computer will handle in this mode is 32768 from each polarization.
- Compute the stokes parameters for polarization observations.

- Integration longer than 2 sec and for a maximum of 6 states to be done in the HPC
- Write the integrated spectra to a SDFITs file.

The operations involved in the pulsar search mode with a single beam:

- The data from the spectrometer will be read and written to disk after integrating for 0.5 msec. Only one switching state will be present for these observations. The maximum number of channels that the computer will handle in this mode is 1024 from each polarization.
- Compute the Stokes parameters for polarization observations.
- Write the data to a SDFITs file.

2.13 Monitor and control

Several monitor and control signals (yet to be defined) from the ROACH board will be available through the power PC and connected to a monitor and control (M&C) computer through 1 GbE link. In addition it is desirable to display the integrated spectra from the 8 ROACH board about every 30 sec for monitoring.

Acknowledgment

We thank Rich Lacasse from NRAO, CV, for the many useful comments on the GBT spectrometer specifications.

Reference

Lockman, F. J., 1992, GBT memo 93
Mangum, J. G., et al. , 2007, A&A, 474, 679

Revision History

- ver 0.2, Nov 21, 2011
  A request to record only one of the self powers has been raised by Ron Maddalena. This request is primarily for the Ka-band data processing. The VEGAS specification has been updated to include this.
- ver 0.2, Nov 21, 2011
  Spectral power quantization has been upgraded to 32 bits.
- ver 0.3, Dec 13, 2011
  Data rate to disk has been corrected to take into account of the upgraded spectral power quantization of 32 bits.

Table 1: GBT spectrometer specifications

Specifications per beam (2 IFs)	
Spectrometer output	self of IF1, self of IF2, cross of IF1 & IF2
Spectral values	32 bit quantized
Digitized bandwidth for each IF	$\geq$ 1050 MHz
Isolation between IFs	$\geq$ 35 dB The coupled power should not vary by more than 1% in 1 hour
Switching signal & states	(see Table 3 & Fig 2)
Spectrometer modes	(see Table 2)
Integration time in the hardware	0.5 msec to 2 sec
SFDR & IMD	As specified by ADC 083000
Spectral filter response	stop-band rejection $\geq$ 90 dB; stop-band is channels $> \pm$ 1.0 resolution unit $<$ 0.1 dB ripple within 3dB bandwidth
Band reduction filter response	$<$ 0.1 dB ripple within 3dB bandwidth Aliased power $<$ 20 dB of in-band power Roll-off: 20 dB in 1% of the bandwidth
Anti-aliasing filter	Low pass filter with 3dB bandwidth 1.5 GHz stop-band rejection $>$ 20 dB Roll-off: 20 dB per 100 MHz $<$ 0.1 dB ripple within the 3dB bandwidth
Analog input power level	+2 dBm for full-scale of the 8 bit ADC $-$40 dBm for 1 bit fluctuation
Direct Digital Converter LO	16 bits, 10 KHz resolution
Specifications for the High performance computing (HPC)	
Data rate to disk	100 MB/sec per beam (2 IFs), full Stokes
Integration time in the HPC	2 sec to 1 minute
Processing pipelines	KFPA mapping, single beam (2 IFs) observation, fast spectral dump to disk (see text for details)
Data output format	FITS images for KFPA, SDFITS for other observations
Monitoring	Optional display of the spectrum every 30 sec
Number of beams to be processed	8 (16 IFs)

Table 2: GBT spectrometer modes specified per beam (2 IFs)[a]

Number of sub-bands per IF	Sub-band Bandwidth[b] (MHz)	Number of channels per sub-band per IF	Spectral resolution (KHz)	Velocity range at 90 GHz (km s^{-1})	Velocity resolution at 90 GHz (km s^{-1})	Integration time minimum (msec)	Integration time maximum (sec)	Priority
Observing Mode 1								
1	1500[c]	1024	1465	5000[b]	4.9	0.5	60	1
1	1000	2048	488	3333	1.6	0.7	60	
1	800	4096	195	2667	0.7	1.3	60	
1	500	8192	61	1668	0.2	2.5	60	
1	400	16384	24	1333	0.08	5	60	
1	250	32768	7.6	833	0.03	10	60	
1	100	32768	3.1	333	0.01	10	60	
1	50	32768	1.5	166	0.005	10	60	
1	25	32768	0.8	83	0.003	10	60	
1	10	32768	0.3	33	0.001	10	60	3
1	5	32768	0.15	17	0.0005	10	60	
1	1	32768	0.03	3	0.0001	10	60	4
Observing Mode 2								
8	30	4096	7.3	100	0.02	10	60	
8	15	4096	3.7	50	0.01	10	60	2
8	10	4096	2.4	33	0.008	10	60	
8	5	4096	1.2	17	0.004	10	60	
8	1	4096	0.2	3	0.0008	10	60	

[a] These modes are implemented in each spectrometer that processes 2 IFs from a beam.
[b] In Observing Mode 1, bandwidths less than 1500 MHz should be centered between 150 MHz and 1350 MHz.
[c] The usable bandwidth will be 1250 MHz, which corresponds to a velocity range of 4165 km s^{-1} at 90 GHz.

Table 3: Specifications for the Switching signal generation

Timing				
	'on' time[a]		Blanking time	
	min (msec)	max (msec)	min (msec)	max (msec)
Cal sw sig.[b]	25	500	0.5	50
Freq/Pos sw sig.	50	1000	2	5000
'Look ahead' sig. advance time	min 0.1 sec; max 1 sec			

Number of switching states	min 1; max 6
Number of bits for Freq/Pos sw sig.	2
Number of bits for Cal sw sig.	1
Source for sw sig.	Internally generated & External
Data Packetization	Switching states need to be encoded
	in the output data from the hardware.

[a] 'on' period includes 1 Blanking period. 'off' period is equal to 'on' period (see Fig 2)
[b] There should be integer number of cal sw cycle within an 'on' and 'off' time