VLA TECHNICAL REPORT #4

MODULES T4A and T4B

LO OFFSET

A. R. Thompson

CONTENTS

FIGURES

I (a). L.O. OFFSET MODULE (T4A & T4B), DRAWINGS AND PARTS LISTS

Schematic Diagram

L.O. Offset Schematic	C13450S2

Parts List

L.O. Offset Module	A13450Z4

Module, Mechanical

Front Panel	B13450M21 (Parts 1&2)
Rear Panel	B13450M20
Top and Bottom Support Bar	B13050M3
Left Side Plate	C13450M22
Perforated Cover	C13050M7
Fastener for Perforated Cover	C13050M17
Guide	B13050M4
Mixer Mounting Blocks	A13050M33
Assembly Drawing for L.O. Offset Module	D13450P5

I (b). RELATED PUBLICATIONS AND MEMORANDA

VLA Electronics Memo #116

Some Tolerances Relating to Spurious Responses

A. R. Thompson August 29, 1973

Addendum to VLA Electronics Memo #116

A. R. Thompson September 6, 1973

II. Operation and Circuit Description

The LO Offset module provides the oscillator signals for converting the IF signals from the modem down to base-band. This conversion is performed in the IF Receiver modules. The IF bands are 1300-1350, 1400-1450, 1550-1600, and 1650-1700 MHz, and when using the full bandwidths of the IF Receiver modules the required LO frequencies are 1300, 1400, 1550, and 1650 MHz. When using the narrower IF Receiver bandwidths it is necessary to be able to select the signal from any part of the 50 MHz wide band, and this requires that the four LO frequencies also be variable over ±25 MHz.

In transmission along the waveguide the 1300-1350 and 1400-1450 MHz signals effectively become sidebands to a 1200 MHz subcarrier, and hence share with that signal some of the instrumental phase shifts that may occur in the transmission. To remove these unwanted phase shifts the received 1200 MHz signal is subtracted from the two IF bands by deriving the local oscillator for the IF Receivers from the same 1200 MHz. This is done in an LO Offset module, the circuit of which is shown in Figure 1. The 1200 MHz input at J1 is divided in a power splitter and fed into two mixers. The mixers also receive signals at 100 ±25 MHz from J2 and 200 ±25 MHz from J4. The sum frequencies are selected by appropriate filters F1 and F2 and the outputs at 1300 ±25 MHz and 1200 ±25 MHz are amplified and appear at J3 and J5. These outputs go to the LO inputs of two IF Receiver modules. The amplifiers, Avantek ASD 8199M, were supplied in accordance with specification no. A13450N1 and contain one each UT02011, UT02002 and UTO2003 module (see Section V.)

In an exactly similar way, the IF bands at 1550-1600 and 1650-1700 MHz act as sidebands on an 1800 MHz subcarrier in the waveguide transmission. The LO signals for these channels are derived by subtracting 250 ±25 MHz and 150 ±25 MHz from 1800 MHz in another LO Offset module. The LO Offset module

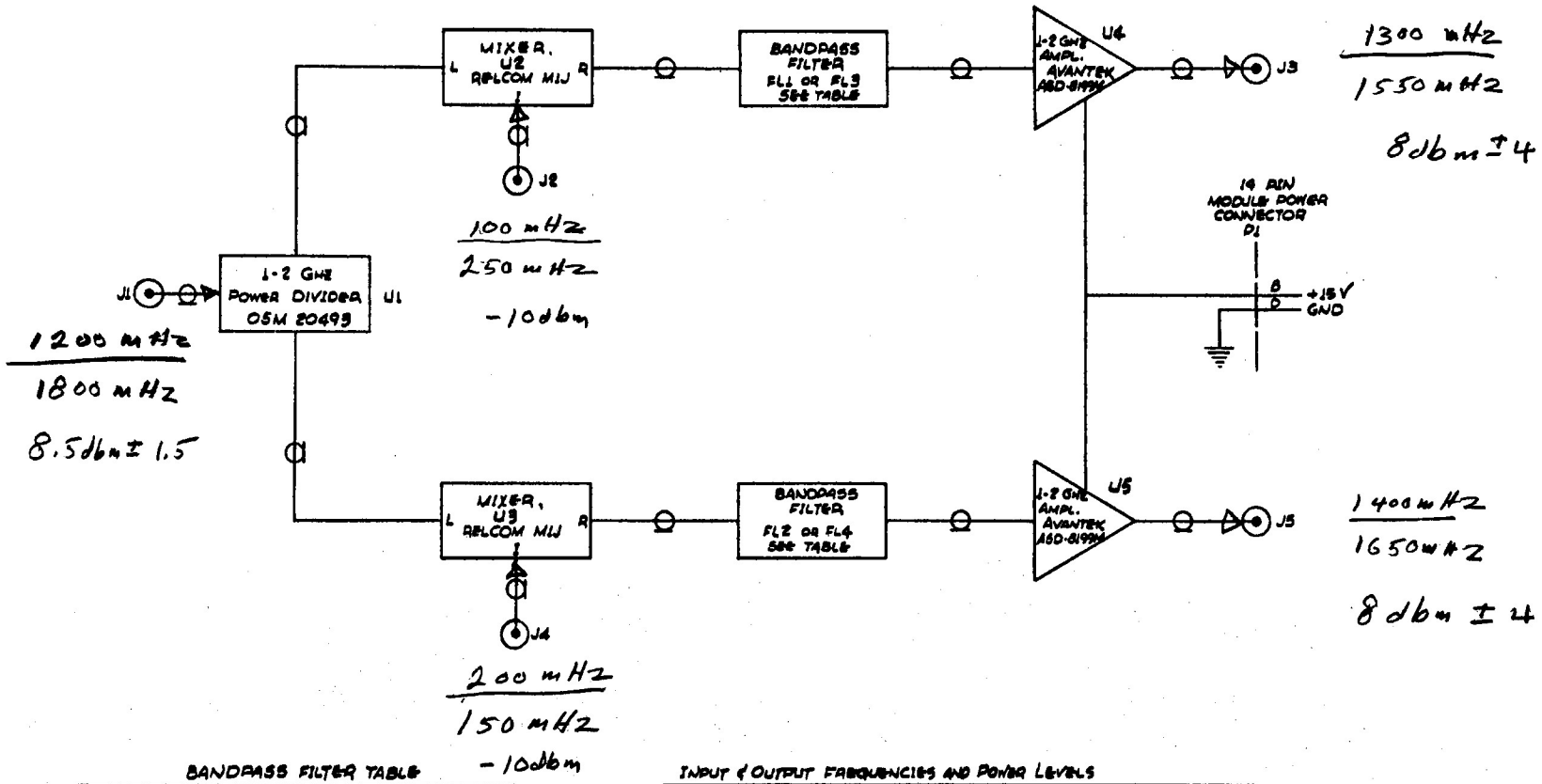

BANDPASS FILTER TABLE

T4A MODULE (1.2 GHZ INPUT)		T4B MODULE (1.8 GHZ INPUT)	
FILTER	DESCRIPTION	FILTER	DESCRIPTION
FL1	GB120-1300/100-0 KEL	FL3	GB120-1550/100-0 KEL
FL2	GB120-1400/100-0 KEL	FL4	GB120-1650/100-0 KEL

INPUT & OUTPUT FREQUENCIES AND POWER LEVELS

TERM.	T4A MODULE	T4B MODULE	COMMON POWER LEVELS
J1	1200 MHZ	1800 MHZ	8.5 ± 1.5 dbm
J2	100 ± 25 MHZ	250 ± 25 MHZ	-10 dbm
J3	1300 ± 25 MHZ	1550 ± 25 MHZ	8 ± 4 dbm
J4	200 ± 25 MHZ	150 ± 25 MHZ	-10 dbm
J5	1400 ± 25 MHZ	1650 ± 25 MHZ	8 ± 4 dbm

REV	DATE	DRAWN BY	APPR'D BY	DESCRIPTION
A	[illegible]	J. GRAY	[illegible]	"J4" WAS -10 dbm; "J5" WAS 8 ± 4 dbm

VLA — L.O. OFFSET T4A & T4B

NATIONAL RADIO ASTRONOMY OBSERVATORY
CHARLOTTESVILLE, VA. 22901

TITLE: SCHEMATIC DIAGRAM

DRAWN BY: J. GRAY — DATE: 9-3-74
DESIGNED BY: A.R. THOMPSON — DATE: 8-29-74
APPROVED BY: [illegible] — DATE: [illegible]

SHEET [illegible] OF 1 — DRAWING NUMBER C1346082 — REV A — SCALE [illegible]

[redacted]URE[redacted]

which produces the two lower LO signals is designated T4A and the one which produces the two higher frequency signals T4B. The T4A and T4B modules differ only in the center frequencies of the filters F1 and F2 as shown in Figure 1.

In the central control building the equipment that receives the signals from each antenna is called the IF Receiver sybsystem. It contains one T4A and one T4B module which together produce the LO signals for 4 IF Receiver modules. The T4A and T4B modules are located in slots 1 and 2 respectively of bin S, rack N.

The LO Offset module is so simple that test procedures are rather obvious. A signal at 1200 or 1800 MHz is injected at J1 and a signal variable over the appropriate frequency range at J2 or J4. The output at J3 or J5 is best displayed on a spectrum analyzer, so that as well as checking that the wanted frequencies are present at the correct level, the presence of any unwanted signals can also be detected. For a correctly operating module, avoidance of unwanted responses is the main constraint on the input power levels, as discussed in the following section.

Power requirements for each T4A and T4B module are 140 ma at +15V.

III. Spurious Responses

Let f_1 indicate the frequency 1200 or 1800 MHz entering J1 and f_2 denote the frequency entering J3 or J4. The spurious responses with which we are concerned are of two kinds. The first occurs when $2f_1 - mf_2$ falls within the passband of the appropriate filter F1 or F2. The second occurs when nf_2 falls within the filter passband. Here m and n are integers, and both responses depend upon the production of harmonics of f_2 within the mixer. The strengths of these harmonics fall off as the harmonic number m or n increases, and thus the most serious unwanted signals are expected when m or n have the lowest value. Note that the two kinds of responses can be identified on the spectrum analyzer

by watching how much they increase or decrease in frequency for a given change in f_2.

The lowest troublesome harmonic turns out to be the fifth, and it results in a spurious response of the first kind which occurs in the second highest LO channel; 2 x 1200 - 5 x 200 = 1400 MHz. Measurements on modules (Serial Number A1 of both T4A and T4B types) confirm that this is the strongest unwanted response. The level of this response relative to the wanted output depends upon the input levels of f_1 and f_2. The relative strength of the unwanted response decreases as f_2 is decreased, but we cannot make f_2 much less than -10 dBm unless a higher gain output amplifier is used to compensate for loss in strength of the required output. With f_2 at a level of -10 dBm the unwanted response was found to be a minimum when the 1200 MHz level at J1 was 8.5 dBm, and for a range of levels between 7 and 10 dBm the unwanted response was 65 dB below the wanted output.

What is the maximum tolerable level of the spurious response? The discussion in VLA EM #116 (see case (c) on pp.6-7) plus the addendum to that memorandum indicates that the resulting signal in the IF should be 62 dB below the total IF signal in the 50 MHz bandwidth. The IF level at the mixer inputs of the IF receivers is approximately -20 dBm, so the maximum tolerable strength for an unwanted signal is -82 dBm at the signal input of the mixer or -57 dBm at the LO input, taking the RF-LO isolation as 25 dB. The -57 dBm level is -65 dB relative to the wanted LO signal. Thus the observed level of -65 dB should be just about tolerable. If further suppression is found to be necessary, reduction of the f_2 level would be a possible approach.

For the second kind of spurious response the lowest harmonic that will be encountered is the seventh; 7 x 200$\cancel{0}$ = 1400 MHz. Measurements indicate that this response is about 10 dB below the one discussed above. Unwanted responses in the other three LO frequency channels were all found to be of negligible level.

The required input power levels to the module are summarized in the table in Figure 1. The levels at J2 and J4 should not exceed the -10 dBm figure by more than one or two dBm but can be lower so long as sufficient output is obtained at J3 and J5. The output levels given, 8 $\pm$4 dBm, represent the tolerable range of input power at the mixers in the IF Receiver modules.

BILL OF MATERIAL

[XX] ELECTRICAL [ ] MECHANICAL BOM # A13450Z4 REV B DATE _____ PAGE 1 OF 4

MODULE # T4 NAME L.O. Offset DWG # D13450P5 SUB ASMB _____ DWG # _____

SCHEMATIC DWG # C13450S2 LOCATION _____ QUA/SYSTEM _____ PREPARED BY J. Gray APPROVED [signature]

ITEM #	REF DESIG	MANUFACTURER	MFG PART #	DESCRIPTION	TOTAL QUANT. -T4A	T4B
1		N.R.A.O.		L.O. Offset Ass'y.	--	--
2		Omni-Spectra	20493	Isolated Power Divider	1	1
3						
4		" "	OSM 218	Straight R.F. Adapter	2	2
5		" "	OSM 201-1A	" R.F. Connector	13	13
6	J1 thru J5	" "	OMQ3043-75	R.F. Connector	5	5
7		Avantek	ASD-8199M	1-2 GHz Amp	2	2
8						
9		K&L Microwave, Inc.		Filter Clips	4	4
10		Relcon	M1J	Mixer	2	2
11		AMP Special Industries	201355-3	Connector, 14 Pin	1	1
12		" " "	201347-4	Connector Shield	1	1
13		" " "	202512-1	Ground Guide Socket	1	1
14		" " "	202514-1	Guide Pin	1	1
15		" " "	201578-1	Crimp Pins	2	2

BILL OF MATERIAL

[XX] ELECTRICAL [ ] MECHANICAL BOM # A13450Z4 REV B DATE _____ PAGE 2 OF 4

ITEM #	REF DESIG	MANUFACTURER	MFG PART #	DESCRIPTION	TOTAL QUANT. T4A	TOTAL QUANT. T4B
16		Uniform Tubes	UT 141	R.F. Cable, 8 ft.	1	1
17			#24 AWG, Blk.	Wire, Multi-Strand, PVC Insul.	1	1 ft
18			#24 AWG, Rd.	" " " " " 1 ft.	1	1
19				Solder	A/R	A/R
20		K&L Microwave	6B120 1300/100-0	Filter T4A	1	
21		K&L Microwave	6B120-1400/100-0	Filter "	1	
22		K&L Microwave	6B120-1550/100-0	Filter T4B		1
23		K&L Microwave	6B120-1650/100-0	Filter "		1
24		Panduit	SST 1M	WIRE TIE	2	2
25						
26						
27						
28						
29						
30						
31						
32						

BILL OF MATERIAL

[ ] ELECTRICAL [XX] MECHANICAL BOM # A13450Z4 REV B DATE _____ PAGE 3 OF 4

ITEM #	REF DESIG	MANUFACTURER	MFG PART #	DESCRIPTION	TOTAL QUANT. 74A	TOTAL QUANT. 74B
33		N.R.A.O.	C13450M22	Lt. Side Plt.	1	1
34						
35		"	B13450M20	Panel, Rear	1	1
36		"	B13050M3	Bar, Support, Top & Bottom	2	2
37		"	C13050M7	Top Cover	1	1
38			B13050M17	Fastener, Perf. Cover	2	2
39		"	B13050M4	Guide, Module	2	2
40		Southco	47-11-204-10	Screw, Captive	2	2
41			#6-32x.625	St. St'l. Pan. Hd. Slotted	2	2
42			#6-32x.750	" " " " "	2	2
43			#6-32x.250	" " Hex Soc. Cap. Scr.	2	2
44			#6-32x.250	St. St'l. Pan Hd. Scr.	4	4
45			#6-32x.250	St. St'l. Flat Hd. Scr.	12	12
46			#4-40x.312	" " " " "	4	4
47			#4-40x.250	St. St'l. Flat Hd. Scr.	8	8
48			#4-40x.500	" " " " "	4	4
49			#2-56x1.00	" " " " "	2	2

BILL OF MATERIAL

[ ] ELECTRICAL [XX] MECHANICAL BOM # A13450Z4 REV B DATE _____ PAGE 4 OF 4

ITEM #	REF DESIG	MANUFACTURER	MFG PART #	DESCRIPTION	TOTAL QUANT. 74A	TOTAL QUANT. 74B
50			#4-40	Hex Nut, St. St'l.	8	8
51			#4	Washer, Flat	8	8
52			#2-56	Hex Nut, St. St'l.	2	2
53			#6	Washer, Flat	4	4
54		NRAO	B13050M33	Mixer support	4	4
55		NRAO	B13450M20-1	Panel, Front	1	
56			B13450M21-2	" "		1
57						
58						
59						
60						
61						
62						
63						
64						
65						
66						

WATKINS-JOHNSON
Relcom Products

DC TO 2.0 GHz DOUBLE-BALANCED MIXER MODEL M1J

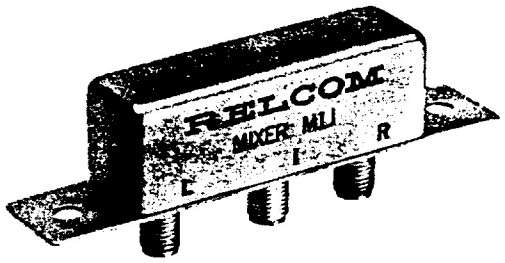

- HIGH ISOLATION: >50 dB (TYP.)
- LOW NOISE FIGURE: 6 dB (TYP.)
- WIDE-BAND I_F: DC to 1.0 GHz
- HERMETICALLY SEALED

Introduction The Model M1J is a wide-band double-balanced mixer in a hermetically sealed package. This mixer is designed to provide maximum isolation of the local oscillator (LO) signal for best possible suppression of internally generated harmonics and LO leakage. It is also designed for a low noise figure.

Mixing When two signals are fed to the mixer, sum and difference frequencies are produced at the third port. Best isolation is achieved by feeding the high-level LO signal to the L-port. Both L- and R-ports are ac-coupled and have a 0.3 to 2.0 GHz frequency response. The I-port is dc-coupled and has dc to 1 GHz frequency response. For down-converting applications, feed the input signal into the R-port and take the output from the I-port. For up-converting applications, feed the input signal into the I-port and take the output from the R-port. Minimum conversion loss is achieved by providing a LO level of +7 dBm or greater. At this level, conversion loss is typically 6 dB for an I_F frequency less than 200 MHz. For minimum intermodulation products, the input signal level should be as low as possible.

Pulse Modulation For best modulation performance, feed the unmodulated signal to the L-port and the modulating signal to the I-port. An unlimited pulse length is possible as the I-port is direct coupled. Reversal of the modulating signal's polarity will allow the output to be shifted by 180 degrees. A modulating signal level of 20 mA will minimize insertion loss. As the mixer is constructed with Schottky Barrier diodes, rise and fall times less than 1 nsec. can be achieved.

Amplitude Modulation To amplitude modulate, insert a dc off-set current along with the modulating signal at the I-port. The carrier signal is inserted at the L-port and the modulated signal is taken from the R-port. The dc-current controls the amount of carrier present in the output.

Phase Detection The mixer's excellent balance eliminates null balance adjustments and minimizes interaction between the signal sources. With identical frequencies fed to the R- and L-ports, a dc-output related to the phase difference between the two signals will appear at the I-port. A maximum positive dc-output indicates the signals are in phase; zero dc-output indicates the signals are separated by 90 degress; and, a maximum negative dc-output indicates the signals are 180 degrees out of phase.

Current-Controlled Attenuation In this mode of operation, a dc-current into the I-port determines the amount of signal passed from the L-port to the R-port. Maximum attenuation, corresponding to the mixer's isolation, is achieved with no dc-current. Minimum attenuation is achieved with dc-current equal to, or greater than, 20 mA.

Note: Avoid damage to the mixer diodes by always driving the I-port with a current-limited source.

WATKINS-JOHNSON COMPANY
3333 Hillview Avenue, Palo Alto, California 94304
(415) 493-4141, TWX: 910-373-1253, TELEX: 348-415, CABLE: WJPLA

FEBRUARY 1973

MODEL M1J

SPECIFICATIONS*

Characteristics	Min	Max.	Test Conditions
SSB Conversion Loss			f_L & f_R 1000 to 1800 MHz
		7.0 dB	f_I DC to 200 MHz
		8.5 dB	f_I 200 to 1000 MHz
			f_L & f_R 300 to 2000 MHz
		8.0 dB	f_I DC to 200 MHz
		9.0 dB	f_I 200 to 1000 MHz
SSB Noise Figure			f_L & f_R 1000 to 1800 MHz
		7.0 dB	f_I 10 to 200 MHz
		8.5 dB	f_I 200 to 1000 MHz
			f_L & f_R 300 to 2000 MHz
		8.0 dB	f_I 10 to 200 MHz
		9.0 dB	f_I 200 to 1000 MHz
Isolation			
L to R	40 dB		f_L 300 to 1000 MHz
L to I	25 dB		
R to I	20 dB		f_R 300 to 1000 MHz
L to R	35 dB		f_L 1000 to 2000 MHz
L to I	25 dB		
R to I	20 dB		f_R 1000 to 2000 MHz
Conversion Compression		1.0 dB	f_R level = 0 dBm
Desensitization Level		1.0 dB	f_{R2} level = −2 dBm

*Measured in a 50-ohm system with f_L at +7 dBm.

ABSOLUTE MAXIMUM RATINGS

Storage Temperature . . . . . −65°C to +100°C
Operating Temperature . . . . . −54°C to +100°C
Peak Input Power . . . . . 400 mW max. at 25°C
Derate to 50 mW at 100°C (4.67 mW/°C)
Peak Input Current . . . . . 50 mA

ENVIRONMENTAL

The Model M1J Mixer will meet its specifications over the temperature range of −54°C to +100°C and after exposure to any or all of the following tests per MIL-STD-202D:

Exposure	Method	Test Condition
Thermal Shock	107C	B
Altitude	105C	G
H.F. Vibration	204B	D
Mechanical Shock	213A	C
Random Vibration (15 minute per axis)	214	11F
Humidity	106C	
Temperature Cycle	102A	C

The M1J will meet the environmental requirements of MIL-E-16400F, Class 1 and MIL-E-5400L Class 2.

WEIGHT	31 grams (1.1 oz.) maximum
CONNECTORS	SMA
WARRANTY	1 Year

SCHEMATIC DIAGRAM

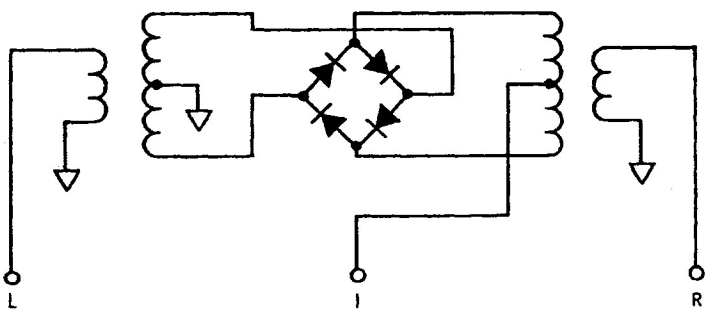

OUTLINE DRAWING

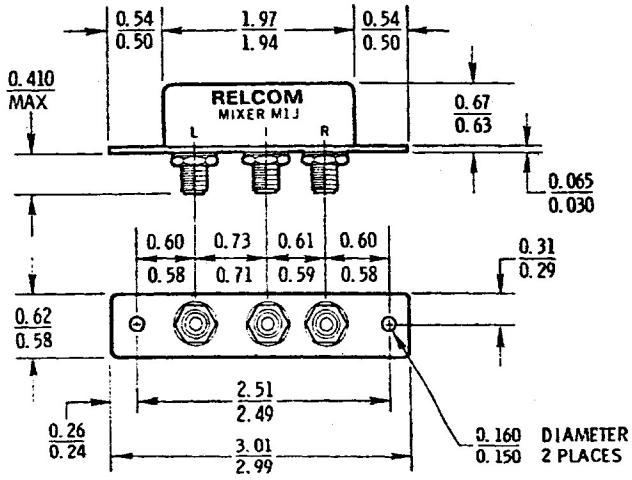

NOTE: DIMENSIONS ARE IN INCHES

TYPICAL PERFORMANCE AT 25°C

Mixer Test Circuit: When terminated as shown, the mixer impedance at the R- and I-ports is 50 ohms. The impedance at the L-port is nonlinear and is a function of the f_L level. For most applications, the f_L level should be as shown. This is equivalent to delivering 5 milliwatts (+7 dBm) into a 50-ohm load. The f_R level should be below 1 milliwatt (0 dBm) in order to avoid conversion compression.

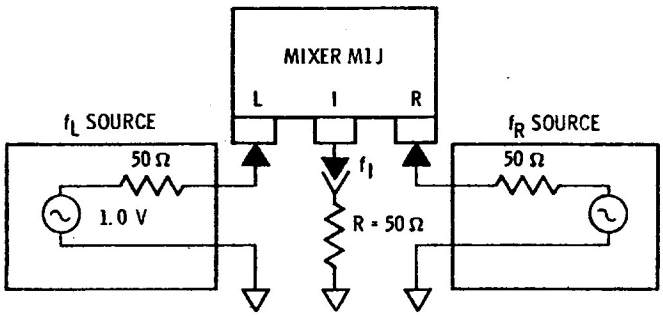

Drive Level: The minimum recommended drive level is +4 dBm. This level has been established on the premise that a lower drive level will degrade the conversion loss and noise figure over the full temperature and frequency range. Operation at +4 dBm is recommended to reduce the level of the intermodulation products in the lower two rows of the intermodulation chart. It will also minimize the output noise below 2 kHz.

The maximum recommended drive level is +13 dBm. This upper level has been established by the desire to avoid a serious increase in noise figure and a loss of isolation. Operation at +13 dBm is recommended to achieve best two-tone performance and best suppression of the intermodulation products in the rows above the second row in the intermodulation chart.

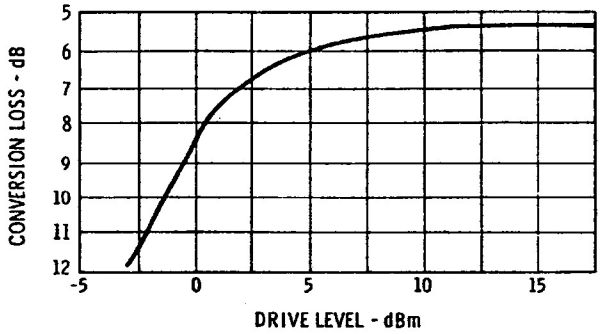

Conversion Loss vs. Input Frequency: Conversion loss of the mixer when used in an SSB system. The frequency ordinate refers to the R-port (f_R) with f_I at 150 MHz. Data plotted with an f_L level of +7 dBm.

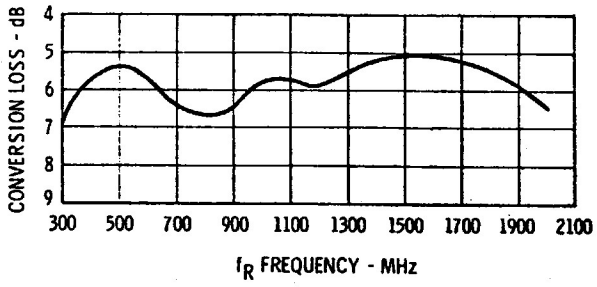

Conversion Loss vs. f_I Frequency: Conversion loss of the mixer when used in a SSB system. The frequency ordinate refers to the I-port (f_I) with f_R at 1200 MHz and f_L swept from 200 to 1100 MHz.

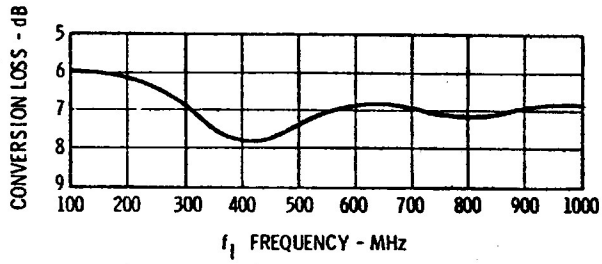

Isolation vs. Frequency: Level of the f_L signal fed through to the R- and I-ports with respect to the level of the f_L signal at the L-port.

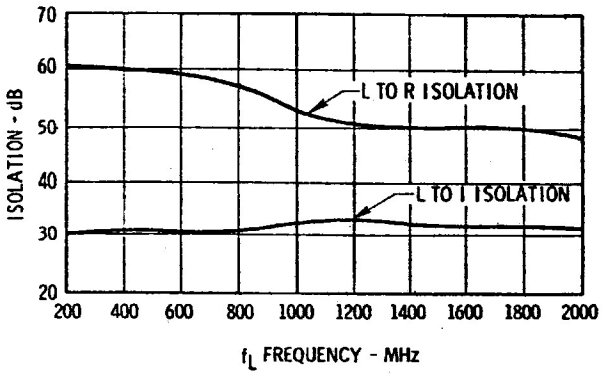

MODEL M1J

TYPICAL PERFORMANCE AT 25°C (Con't.)

VSWR vs. Frequency: VSWR of the L-, I- and R-ports in a 50-ohm system with f_L at +7 dBm. Some variation in the R-port VSWR will occur as a function of the L-port frequency. Curves for the R-port VSWR are plotted for L-port frequencies of 0.6 and 1.6 GHz. Also shown are the L-port VSWR and the I-port VSWR with f_L at 0.6 GHz.

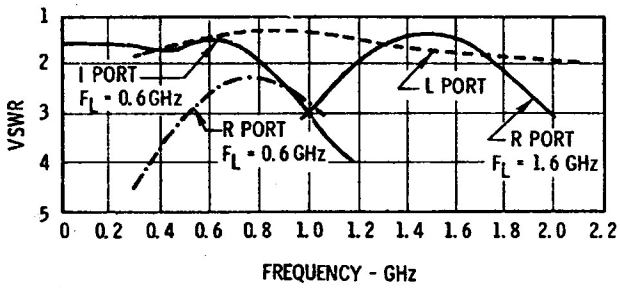

Harmonic Intermodulation Products: Intermodulation signals which result from the mixing of mixer generated harmonics of the input signals are shown below. Mixing product suppression is indicated by the number of dB below the desired output level, f_R-f_L. Products are for the difference frequencies nf_L-mf_R and mf_R-nf_L. The performance was measured with f_R at 300 MHz, −10 dBm; f_L = 299 MHz, +7 dBm for light area and +13 dBm for shaded area.

$5f_R$	>71	>71	>71	>71	>71	>71
	>71	>71	>71	>71	>71	>71
$4f_R$	>71	>71	>71	>71	>71	>71
	>71	>71	>71	>71	>71	>71
$3f_R$	>71	53	68	56	71	51
	>71	63	67	61	>71	69
$2f_R$	61	50	65	50	67	66
	63	55	64	64	70	66
f_R	28	0	40	12	41	26
	29	0	41	10	42	19
	—	7	43	29	54	30
	—	3	36	27	54	29
		f_L	$2f_L$	$3f_L$	$4f_L$	$5f_L$

PRINTED IN U.S.A.

Thin Film Unit Amplifiers—MIC•amp® Modules

Avantek's patented MIC·amp line offers the system designer a wide selection of miniature thin film amplifiers, attenuators, printed circuit boards, cases and related accessory items.

Individual MIC·amp amplifier and attenuator units are supplied in standard TO-8 transistor cans. Modules purchased individually are supplied with mounting clamps which insure a proper ground with the user's printed circuit board.

Avantek also offers a selection of standard printed circuit subassembly board with 1, 2, 3 or 4 sockets to facilitate module cascading. These printed circuit boards are designed for use with TC-2 and TC-4 aluminum cases. Cases are supplied with all necessary hardware, including RF connectors of the customer's choice.

UTA assemblies, consisting of cascaded modules already assembled and mounted in sealed cases with appropriate connectors, are available for direct system installation.

NOTE: MIC·amps can be cascaded with Avantek's popular Unit Amplifier modules by use of UB-3 and UB-4 printed circuit boards. These boards are installed directly in UC Series cases along with any Unit Amplifier modules desired.

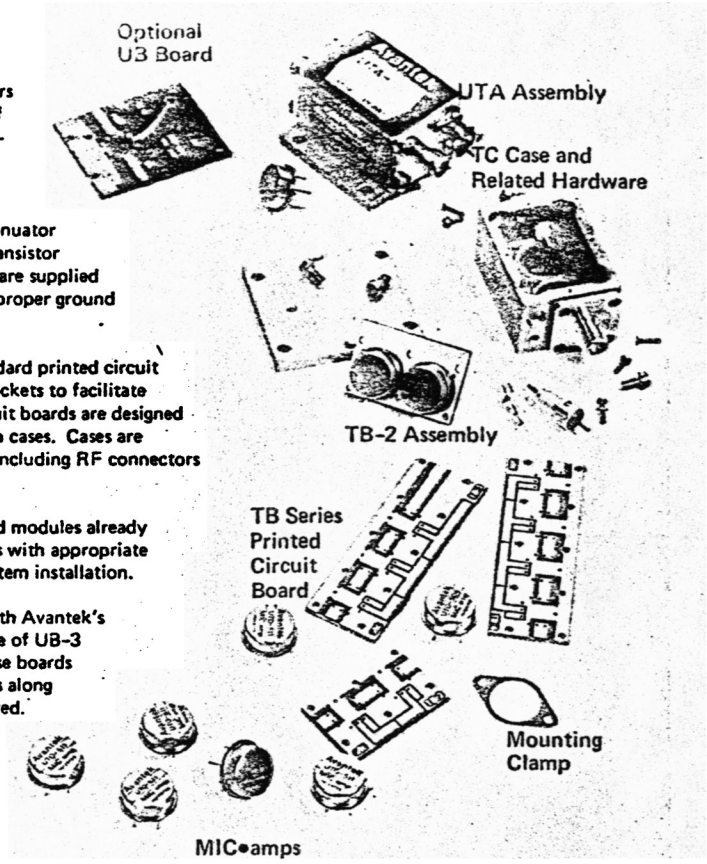

ARRANGEMENT OF MODULES FOR SYSTEMS USE

In a normal cascade, UTO Series modules are arranged in ascending order, according to output power, to achieve the desired level of gain. UTF Series attenuators can be placed in cascade for the purpose of gain control. Their position in the cascade of amplifier modules is determined by the user's dynamic range and noise figure requirements.

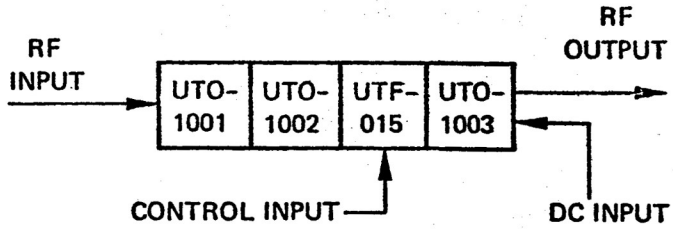

BONUS FEATURE

Up to three of most of the MIC•amp substrates may be cascaded within the new miniature Dual-In-Line (DIP). This package provides the smallest "connectorless" hermetic configuration (see page 14).

THIN FILM ATTENUATORS (TO-8 Package)

Model	Frequency Range (MHz)	Insertion Loss (dB) Maximum	Attenuation (dB) Minimum	VSWR Maximum	Control Power Volts DC (Typical	Control Power Current mA (Typical)	Input Power Volts DC	Input Power Current mA (Typical)
UTF-015	5-1000	2.5	15	2.0	-10	7	+15	7
UTF-040	5-1000	2.5	30[1]	2.0	-10	45	+15	10
UTF-2015	500-2000	2.5	15	2.0	-10	7	+15	7

[1] 35 dB min, 10-500 MHz; 40 dB min, 20-250 MHz

Model	Frequency Response (MHz) Minimum	Gain (dB) Minimum	Flatness (±dB) Maximum	Noise Figure (dB) Maximum	VSWR (50 ohms) Maximum In	VSWR (50 ohms) Maximum Out	Power Output For 1 dB Gain Compression (dBm) Minimum	Typical Intercept Point For IM Products (dBm)	Input Power (±1% Regulation) Volts DC	Input Power (±1% Regulation) Current mA (Typical)
UTL-502	5-500 Limiting Amplifier	7 Small Signal	1.0	11	2.0	2.0	(Sat Power) -4 dBm (min) -2 dBm (typ)	Even harmonics 15 dB down w/input from -50 to +7 dBm	+15 -15	15 15
UTO-510	5-500	15	1.0	3.0	2.0	2.0	-2	+8	+15	10
UTO-511	5-500	15	1.0	2.5	2.0	2.0	-2	+8	+15	10
UTO-501	5-500	14	1.0	4.0	2.0	2.0	-2	+11	+15	10
UTO-502	5-500	14	1.0	5.5	2.0	2.0	+7	+21	+15	23
UTO-503	5-500	9.0	1.0	7.0	2.0	2.0	+13	+27	+24	50
UTO-504	5-500	6.0	1.0	11	2.0	2.0	+17	+31	+24	100
UTO-512	5-500	20	1.0	4.5	2.0	2.0	+7	+20	+15	23
UTO-513	5-500	16	1.0	6.0	2.0	2.0	+14	+36 even +27 odd	+24	50
UTO-521	5-500	27	1.0	5.5	2.0	2.0	+6	+18	+15	38
UTO-523	5-500	23	1.0	7.0	2.0	2.0	+12	+36 even +25 odd	+15	80
UTO-551	5-500	15	1.0	4.0	2.0	2.0	-5	+10	+5	7
UTO-1001	5-1000	14	1.0	5.0	2.0	2.0	-2	+11	+15	10
UTO-1002	5-1000	14	1.0	6.5	2.0	2.0	+7	+21	+15	23
UTO-1003	5-1000	9.0	1.0	8.0	2.0	2.0	+13	+27	+24	50
UTO-1051	5-1000	10	1.0	5.0	2.0	2.0	-5	+10	+5	7
UTO-1511	5-1500	10	0.5	4.5	2.0	2.0	-9	+1	+15	7
UTO-1501	5-1500	9.0	0.5	5.5	2.0	2.0	-3	+10	+15	10
UTO-1502	5-1500	9.0	0.5	7.5	2.0	2.0	+6	+19	+15	23
UTO-1503	5-1500	6.0	0.5	9.0	2.0	2.0	+12	+25	+24	50
UTO-2011	1000-2000	7.5	0.5	5.0	2.0	2.0	-3	+10	+15	12.5
UTO-2001	1000-2000	7.5	0.5	6.0	2.0	2.0	-3	+10	+15	12.5
UTO-2002	1000-2000	8.0	0.5	7.0	2.0	2.0	+3	+16	+15	20
UTO-2003	1000-2000	8.0	0.5	8.0	2.0	2.0	+7	+20	+15	30
UTO-2311	1700-2300	8.0	0.5	5.0	2.0	2.0	-3	+10	+15	15
UTO-2302	1700-2300	8.0	0.5	6.5	2.0	2.0	+3	+13	+15	18
UTO-2303	1700-2300	8.0	0.5	8.0	2.0	2.0	+10	+20	+15	30

UTO "R" SERIES

The UTO "R" Series MIC•amps offer all the circuit performance advantages and specifications of their counterparts, the standard, premium commercial grade UTO. In addition, each of the "R" Series MIC•amps has been screened in accordance with MIL-STD-883 procedures. Reliability, therefore, is established and MTBF (in accordance with the criteria of MIL-HDBK-217A) is predicted to be in excess of ten million hours at 25°C.

Each UTO "R" Series unit is screened 100% to the Class B level assurance tests included in the following:

	TEST	CONDITIONS	MIL-STD-883 METHOD	MIL-STD-883 CONDITIONS
1.	Precap Visual	See Note 1		
2.	Preseal Bake	2 hrs, min. at 150°C		
3.	Seal			
4.	Stabilization Bake	24 hrs at 125°C	1008	B
5.	Temperature Cycling	10 cycles	1010	B
6.	Centrifuge	Y_1, direction only; 20,000 G's	2001	D
7.	Fine Leak		1014	A (5 x 10^{-8} cc/sec max)
8.	Gross Leak		1014	C (Step 1)
9.	Burn-In	168 hrs	1015	Note 2
10.	Final Electrical	Go-No-Go at 25°C	Note 3	
11.	External Visual		2009	

NOTES: [1]Internal Visual (Precap): Consistent with the intent of Method 2010, MIL-STD-883, as applicable to UTO MIC•amp fabrication techniques. Specific visual inspection criteria applied are described in Avantek's Quality Assurance Standard Workmanship Manual, Section XVI.
[2]See specific UTO "R" Series specifications for burn-in temperature and bias conditions.
[3]See specific UTO specification for test conditions and limits.

It is important to realize that both the commercial grade and "R" Series UTO-MIC•amps are manufactured on the same production line. The "R" Series receives the additional screening process described above. Therefore, the commercial grade UTO will also demonstrate a very high degree of reliability. (M.T.B.F. of one million hours is predicted from MIL-HDBK-217A). The augmenting screening procedures of the "R" Series adds the final degree of confidence to the UTO product line when high reliability becomes imperative.

NOTE: All UTO models and specifications listed on the previous page are available in "R" Series versions.

CASCADING MIC•amps

The patented circuit design of the MIC•amp permits cascading of units to achieve added gains.

The MIC•amps may be cascaded in 50 ohm microstrip systems using printed circuits. Also, special hardware is available from Avantek for mounting one to four MIC•amps in aluminum cases to provide a complete, shielded amplifier. Also up to three of most of the MIC•amp sapphire substrated modules may be cascaded in the new Avantek Dual-In-Line (DIP) package (see page 14).

The complete accessory package, which includes an aluminum case, RF connectors and a DC feed-through filter. may be ordered. The printed circuit boards and the MIC•amps are specified separately. Detailed installation instructions are supplied with each unit. TC case dimensions are 0.84" high, 1.5" wide (mounting plate), and length, TC-2, 1.37"; TC-4, 2.4" plus connectors.

Amplifier assemblies may be ordered with MIC•amps installed in the aluminum cases by factory technicians. Test data consisting of noise figure, gain, VSWR, and power output measurements over the specified bandwidth will be provided with each amplifier assembly.

Expected typical operating performance of MIC•amp cascades are derived from the simple rules shown below. Complete amplifier cascades of up to four modules assembled at the factory will typically meet the specifications listed below:

Frequency – Units are available for operation over various frequency ranges from 5 to 2000 MHz. Minimum bandwidth is established by the specification of the most narrow member of the cascade.

Gain – Minimum cascade gain is the sum of minimum unit gains.

Gain Flatness – Cascaded flatness will typically be less than the sum of individual module flatness specifications. The individual module data sheets show the very low actual typical module flatness.

Noise Figure – The cascaded noise figure in the TC-cases will be about 1/2 dB greater than that of the input MIC•amp noise figure due to the second stage noise contribution and some connector and TB-board losses at higher frequencies.

Power Output at 1 dB Gain Compression Point – Typical cascade output power is 1 dB less than that of the lowest module output with all modules referred to the output of the cascade.

VSWR – VSWR's of cascades will not exceed 2.5:1. Most VSWR's will be less than 2.0:1.

NOTE: The information listed above applies to cascades of four units or less. For performance information on larger cascades, consult factory.

NATIONAL RADIO ASTRONOMY OBSERVATORY
Charlottesville, Virginia
VERY LARGE ARRAY PROJECT

SPECIFICATION NO: A13450N1

NAME: Solid State Amplifier

DATE: February 5, 1974

PREPARED BY: _____ APPPROVED BY: _____

1. FREQUENCY RANGE: 1.0-2.0 GHz

2. GAIN: 23.5-30 dB (gain of individual units of given type to be equal within ±1 dB).

3. GAIN FLATNESS: ±1 dB

4. POWER OUTPUT: +7 dBm minimum at 1 dB compression

5. NOISE FIGURE: 6 dB max.

6. VSWR: 2.0 max. (input and output)

7. GATING SPEED: The amplifier must switch on or off in less than 10 microseconds when the power supply voltage is gated on and off. Switching time is defined as rise or fall time from 10% to 90% of final RF power. Insertion loss should be greater than 13 dB from 1 to 2 GHz when gated off.

8. INPUT POWER: +15V

9. CONNECTORS: SMA Female

10. Manufacturer is to state whether unit is discrete component construction and whether it is reparable in the event of a transistor failure.