VLA TECHNICAL REPORT #25

MODULE L9/L14

L9 CENTRAL L.O. RECEIVER
L14 CENTRAL L.O. FILTER

Harry Beazell

May 1976

LIST OF FIGURES

TABLE OF CONTENTS

1.0 RELATED DOCUMENTS

1.1 NRAO Drawing Lists

1.1.1 Central LO Receiver L9 (2P)

1.1.2 Central LO Filter L14 (2P)

1.2 Books

1.2.1 Gardner, F., Phase Lock Techniques, John Wiley & Sons, 1966.

1.1.2 Central LO Filter Drawing List

BILL_OF_MATERIALS

NEG. VOLT. REG.	A13230Z28	A26775	3
MONITOR FILTER	A13230Z31	A26775	3
PHASE LOCK LOOP PC BOARD	A13230Z32	-15375	3
CENTRAL LO FILTER	A13230Z33	-05975	4
1200/1800 PHASE ERROR IND	A13230Z39	A24775	2

ASSEMBLY_DRAWINGS

PHASE LOCK LOOP PC BRD	C13230P37	A25275	1
NEG VOLTAGE REGULTR ASSY	B13230P38	-15175	1
MONITOR FILTER ASSEMBLY	C13230P39	-1575	1
1200/1800 PHASE ERROR IND	B13230P46	A24675	1

SCHEMATIC_DIAGRAMS

NEG VOLTAGE REG SCHEM	B13230S10	-33174	1
MONITOR FILTER SCHEMATIC	B13230S12	-1575	1
PHASE LOCK LOOP SCHEMATIC	B13230S13	-31974	1
1200/1800 C ERROR INDIC	B13230S18	-17175	1

LOGIC_DIAGRAMS

NONE

PC_BOARD_ARTWORK

NEGATIVE VOLTAGE REG	A13230AB05	-25275	1
PHASE LOCK LOOP	B13230AB11	-24775	2
1200/1800 PHASE ERROR IND	A13230AB15	-17875	1

PC_BOARD_SILKSCREEN

NONE

PC_BOARD_MECHANICAL

BUFFER AMPLIFIER	B13230M58-L14	A02676	1
NEG VOLTAGE REGULATOR	B13230M63	A25175	1
NEG VOLTAGE REGULATOR	B13230M63	A25175	1
PHASE LOCK LOOP DR DIAG	C13230M69	-15075	1

EC_BCARD_MECHANICAL, CONT_

120C/180C PHASE ERROR IND	B13230M93	A24675	1

BLCCK_DIAGRAMS

BLCCK DIAGRAM	D13230B12	A15575	1
RF INTCON BLK DIAG	C13230B19	B34575	1

WIRE_LISTS

NCNE

MECHANICAL_DRAWINGS

GUIDE	B13050M04-L14	D8775	1
RIGHT & LEFT SIDE PLATES	B13050M18-L14	C8775	1
CCVER,PERFCRATED	C13050M22-1-L14	C5175	1
BAR,SUP. TCP & BCTTCM	B13050M23-L14	C4375	1
PANEL, REAR	C13210M04-L14	D4275	1
PANEL, FRCNT	B13230M35	E21075	1
BRKT, MTG 4WAY PWR CVDR	B13230M43	B4575	1
PARTITICN PLATE	C13230M62	E28875	1
MIXER MCUNT	B13230M65-L14	B3575	1
MCNITCR FILTER BCX	C13230M68	-01474	1

1.1.1 Central LO Receiver Drawing List

BILL_OF_MATERIALS

CENTRAL LO RECEIVER	A13230Z07	-06275	3

ASSEMBLY_DRAWINGS

5 MHZ PHASE DET ENCL	B13230P23-L9	A33674	1
RCVR DAT AMPLIFIER ASSY	B13230P28-L9	B27275	1
DATA LINE DRIVER AMP	B13230P29-L9	A24675	1

SCHEMATIC_DIAGRAMS

RCVR DATA AMP SCHEMATIC	B13230S03-L9	-16875	1
5MHZ DETECTOR SCHEMATIC	C13230S04-L9	-16775	1

LOGIC_DIAGRAMS

NONE

PC_BOARD_NETWORK

5 MHZ Q DETECTOR	B13230AB04-L9	-18375	2
RECEIVER DATA AMPLIFIER	B13230AB09	-24775	2

PC_BOARD_SILKSCREEN

NONE

PC_BOARD_MECHANICAL

5 MHZ PHASE DETECTOR	C13230M55-L9	A25275	1
PARTITION PLATE	C13230M61	D21175	1

BLOCK_DIAGRAMS

BLOCK DIAGRAM	D13230B07	-16875	1
RF INTCON BLK DIAG	C13230B17	B34575	1

WIRE LISTS

NONE

MECHANICAL DRAWINGS

GUIDE	B13050M04-L9	D8775	1
RIGHT & LEFT SIDE PLATES	B13050M18-L9	C8775	1
COVER,PERFORATED	C13050M22-1-L9	C5175	1
BAR,SUP. TOP & BOTTOM	B13050M23-L9	C4375	1
PANEL, REAR	C13210M04-L9	D4275	1
RECEIVER DATA AMPLIFIER	B13230M27-L9	B4975	1
5MHZ DETECTOR END PANEL	B13230M28-L9	C18375	1
RECEIVER DATA AMPLIFIER	B13230M29-L9	B4975	1
RECEIVER DATA AMPLIFIER	B13230M30-L9	B4975	1
PANEL, FRONT	B13230M33	D31775	1
BAR SUP TOP & BTM LEFT	B13230M36	C4375	1
5MHZ PHASE DET END PANEL	B13230M37-L9	C18375	1
RECVR DATA AMP SIDE PANEL	B13230M39-L9	C18675	1
5MHZ PHASE DETECTOR	B13230M54-L9	C18375	1
RCVR DATA AMP END PANEL	B13230M89-L9	-18675	1
RCVR DATA AMP END PANEL	B13230M90-L9	-18675	1
TERMINAL, TURRET MOD	B13230M98-L9	-26275	1

2.0 FUNCTIONAL DESCRIPTION

2.0.1 L9 Central L.O. Receiver

The L9 Module receives the 51.1 msec transmission of 1.2 and 1.8 GHz from the T2 module. The two carriers are filtered and demodulated to produce the Digital Data output for the data set and a round trip 5 MHz phase error output. Separate 1.2 GHz and 1.8 GHz signals are provided for the L14 module.

2.0.2 L14 Central L.O. Filter

The L14 provides narrow band filtered 1.2 GHz and 1.8 GHz outputs for processing of the I.F. signals. The round trip 600 MHz phase error is also derived by multiplying the filtered 1.2 GHz and 1.8 GHz signals and phase comparing the difference 600 MHz with the reference 600 MHz.

3.0 DETAILED CIRCUIT DESCRIPTION

3.0.1 L9 Central L.O. Receiver (Reference Block Diagram D13230B7)

The L9 Module is identical in parts and operation to the pertinent parts of the L4 Module. In L9 the coupled outputs from DC_1 and DC_2 are connected to J_{14} and J_{13} instead of being multiplied and phase compared as in L4.

3.0.2 L14 Central L.O. Filter (Reference Block Diagram D13230B12)

3.0.2.1 R.F. Signals

The reference 1200 MHz input at J_3 from the L9 Module connects directly to the L input of mixer Z_1. The level will be between +1.5 and -5.5 dBm depending on the levels set at the input to L9-J_1 and the gain of L9 amplifier AR_1.

The R input to Z_1 has a level between -13 and +6 dBm determined by the loss of DC_2 (6 dB), HY_1 (1.0 dB), the value of pad AT_1 (nominal 6 dB), and the output level of the VCO Y_1. The 1800 MHz input at J_2 is processed in an identical fashion by Z_2, DC_3, HY_2, AD_2 and Y_2. The power levels of +13 to +6 dBm cover the variation between the two oscillators and if necessary can be adjusted to closer limits by changing the values of AT_1 and AT_2.

3.0.2.2 Phase Lock Loop (Reference Schematic B13230S13)

The input to the phase lock board is terminated by R_{15}. the phase error voltage is amplified by U_1 to produce a standard $\pm$10V for 2π radians phase change.

A divider, R_{22} and R_{23} provides a monitor output, E_3 of $\pm$5 volts. The loop open/close function is by U_2. Remote operation of U_2 is provided. A TTL "1" applied to E_5 opens the loop. The loop error from U_2 is terminated by R_5 and applied to the loop integrator R_4. With the loop in the closed condition and with the VCO set up correctly (see adjustment procedure 4.0.1). The voltage at the output of U_3 will be near zero volts. Transistors Q_1 and Q_2 along with diodes CR_1 and CR_2, R_7 and the LED in the opto isolator MCT-6, serve to indicate departures of the integrator output voltage with a $\approx \pm$2V threshold. This is established by the forward bias drops of Q_1 or Q_2, CR_1 or CR_2, and the LED. The output voltage at U_6 is provided as a monitor point E_3. The network R_{27}, R_{26} and R_{32}, offsets the zero output voltage of U_6 to -7.0V and restricts the maximum $\pm$15V swing to

-4.0 to -10.0 volts for operation of the VCXO. Proper set up of the VCO and of the loop is described in 4.0.1.

3.0.2.3 Loop Operation

The function of the phase lock loops at 1200 MHz and 1800 MHz is to provide "clean" reference signals I.F. demodulators and the round trip 600 MHz signal for measurement of the round trip phase error.

It was desirable to have both loops designed to use identical lock boards. To accomplish this, the VCO's are specified to have controlled AFC gain at the nominal operating point. The value is 0.4 to 0.6 MHz/V @ -7.0V (see MFG spec. 7.0.1). The method of measurement of this value is described in 4.0.1 and the data is recorded for each unit on the module test data sheet. Since elimination of the 300 kHz data sideband on the 1.8 GHz signal is a more stringent requirement than eliminating the 5 MHz sidebands of the 1.2 GHz signal, the loop characteristics are designed around the 1.8 GHz unit.

All oscillators are subject to being injection locked. In any loop when the VCO and reference are compared without offset, the possibility exists for direct injection of the reference into the VCO cavity. The lock range by injection decreases with injection level and approaches zero at the oscillator noise level. In the case of interest the injection locked phase of the oscillator could be in quadrature to the active lock phase since the ring modulators are quadrature devices. A satisfactory model is to consider the net phase to be vector sum of two signals from the oscillator. The active lock amplitude will be the amplitude of the free running VCO and the injection lock amplitude of the reference signal that is injected. When the two signals are in quadrature, the phase error of the resultant has a maximum value of arc tan V_{ref}/V_{osc}. For very small values of V_{ref}, the maximum phase error is equal to the angle in radians. When the ratio is 60 dB, the error is 10^{-3} radians or -.017° and is a trivial amount. In the 1.8 GHz loop the reference signal has a maximum value of +1.5 dBm, the mixer provides -35 dB from L to R, the 4-way divider = -6 dB, the isolator -20 dB and the pad -6 dB giving a reference level at the VCO output of -65.5 dB. With the output level of +22 minimum, the isolation is quite adequate. A qualitative observation of leakage and injection locking can be observed by noting the tendency of the loop to lock with a fixed -7 volts control voltaged applied.

3.0.2.4 Loop Time Constants (Reference Gardner)[2]

The standard gain set of V1 gives $K_D = 10 \sin 1° = .175V/1°$

From the VCO data $K_0 = .4$ to $.6$ MHz/V

Using a mean value of .5 MHz/V and including the gain of the offsetting network = 1/5,

$$K_0 = \frac{.5 \times 10^6}{5} \times 360 = 3.6 \times 10^7 \ °/s/V$$

$$K_V = K_0 K_D = .175 \times 3.6 \times 10^7 = 6.30 \times 10^6$$

$$W_n = \left(\frac{K_V}{T_1}\right)^{1/2} = \left(\frac{6.3 \times 10^6}{9100^{-12} \times 10^4}\right) = \underline{2.63 \times 10^5 \text{ rad}}$$

$$\underline{f_n = W_n/2\pi = 42 \text{ kHz}}$$

The damping factor $\zeta = \frac{W_n}{2} t_2 = 1.2$ @ $R_2 = 1K$, to 5.98 @ $R_2 = 5K$.

The one Hz lock range is Δfp

$$\Delta Wp = 2\sqrt{\zeta W_n K_V} \text{ rad/s}$$

for $\zeta = 5.98$, $\Delta Wp = 6.3 \times 10^6$ rad/s

$\Delta fp = 1$ MHz @ $R_2 = 5K$

$\Delta fp = .45$ MHz @ $R_2 = 1.0K$

The initial set-up requires the integrator offset to drift to the negative limit when the loop is open. The U_1 amplifier offset is set to drift to the + limit when the loop is closed and the reference signal is removed. During the 1 msec period that the reference is off (MODEM is in Tx). The VCO should not drift more than Δfp, to assure a one cycle lock transient. The max. VCO error at -10V control voltage would be about 2 MHz. The min. fp of .45 MHz would allow drift time to the 2 MHz limits as short as 4.5 msec without exceeding the one cycle

---

[2] See Pert Documents

pulling range. In practice the damping resistor R_2 is adjusted for lowest closed loop phase error noise and the offsets are adjusted for minimum pulling transient.

3.0.2.5 Loop Tracking Error

The VCO specification (7.0.1) allows a temperature coefficient of .001%/1°C change in frequency for the 1.8 GHz oscillator, this is 18 kHz/1°C. Assuming a stable operating temperature of 50° ±1°C, the maximum warm up drift (from 20°C) would be ≈.54 MHz, and the operating drift ±18 kHz. The cold error should still be within the lock range but with cycle slipping. The indicator light would also be on. The VCO control voltage would be off -7 volts by about 1V and therefore the integrator would be off about 5 volts. The warm up can be either positive or negative since the oscillator is temperature compensated. The major source of loop static error will be the input offset drift of the LM318 (U_1). The input R_1 of ≈ 1K and the input error slope of about 2 mV/1° .200 μV/1°C total offset current and voltage drift and is well within the LM318 spec.

3.0.2.6 Loop Frequency Response

The loop bandwidth, normally 42 kHz, supplies a minimum attenuation of the 300 kHz data sidebands of 34 dB minimum. This reduces the ±300 kHz sidebands to -15 - 34 = -49 dBc. The 5 MHz sidebands on the 1.2 GHz carrier would be reduced to -10 - 83 = -93 dB. It is possible that somewhat wider loop bandwidths are possible. The limiting factors being the tolerance of the I.F. system to ±300 kHz levels and practical circuit limits. In any case the 1.2 and 1.8 GHz loops should have similar dynamics to obtain minimum "noise" on the 600 MHz difference.

3.0.2.7 600 MHz Phase Error Signal (Reference Block Diag. D13230B12)

Output 1.2 GHz and 1.8 GHz from DC_2 and DC_3 are mixed in Z_3 to produce the 600 MHz phase error signal. The power levels of +13 dBm max. to +6 dBm min. will produce a 600 MHz level from the mixer of +1 dBm to -4 dBm. The bandpass filter FL_1 has a 100 MHz bandwidth and provides greater than 70 dB attenuation at 1.2 GHz and higher. Amplifier AR_1 provides a compressed output of +11 dBm to +8 dBm . A 10 dB coupled output is supplied to the front panel J_{19} at +1 dBm to -2 dBm. Mixer Z_4 provides the phase error between the direct signal at +10.5 dBm to +7.5 dBm and the reference 600 MHz from J_7 at +11 dBm to +5.5 dBm.

The buffer amplifier A_7 provides a standard $\pm 10V$ phase error output to P1-7.

Monitor detectors CR_1 and CR_2 provide level indications to the data set thru P1-23 and P1-24 and the monitor filters A_5 and A_6.

3.0.2.8 Negative Voltage Regulator (Ref. B13230S10)

A -20V negative voltage is required by the VCO's and is supplied by regulating down from the -28V source. Voltage adjustment is by R_3. A separate pass transistor is heat sunk to the module chassis. Nominal load current is -270 mA for the two VCO's and the regulator current limits at -600 mA.

4.0.1 L14 TEST AND ADJUSTMENT

COND. Ref. 1200 and 1800 Applied to J_3 and J_2

Level 0 dBm nominal

TEST #1 (AFC Gain)

1. Remove OSM connector to AFC input of oscillator. Apply -7.0V DC from variable PS.
2. Connect Tektronix 475 Scope Ch. 2 output to counter input. Set counter to frequency 0 - 10 MHz.
3. Connect Scope Ch. 2 probe to input of cont. board. Gain at 20 mV/cm.
4. Set Mech. Tuning to read near zero frequency at -7.0V DC cont. voltage.
5. Read and record frequency at -6.5, -7.0, -7.5. Calculate tuning slope between -6.5 and -7.5V. Value should be .4 to .6 MHz/V.

SET-UP PROCEDURE

1. Set switch board to "0" (loop open).
   Error voltage at input should be 400-600 mV p-p. (AFC voltage ≈ -7.0V).
2. Set "A.G." (R_1) to give 10V p-p error at "E.V." (E_3) frequency should be less than 10 kHz.
3. Set "A.O" (R_{14}) for output offset of -1.5 to -.40 volts at E.V. (E_3) (read with DC voltmeter).
   Set "I.O." pot so that the integrator output voltage runs to the minus limit.
4. Set loop switch to C (loop closed).
   Set "I.O." (R_3) (integrator offset) to just allow the voltage at "I.O." (E_{10}) to go to the plus limit (≈125V DC).
   Set damping pot "IG" (R_2) to max. resistance (CCW).

5. Remove fixed -7.0V from oscillator and connect loop out. Loop should now lock/unlock with operation of the switch.
6. With loop locked, set "1G"$_{(R_2)}$ (integrator damping pot) for minimum rms noise at "E.V."$_{(E_3)}$.
7. Check DC at AFC or on monitor, for -7.0V at AFC or 0V DC at monitor. Monitor limit should be $\pm$2.0V.
   Adjust Mech. frequency to reduce.

5.0 SCHEMATIC AND BLOCK DIAGRAMS INCLUDED

5.0.1 L9 LO Receiver D13230B7

5.0.2 L14 Central LO Filter D13230B12

5.0.3 L4/L9 LO Receiver/Central LO Receiver B13230S3

5.0.4 L4/L9 LO Receiver C13230S4

5.0.5 L14 Central LO Transmitter B13230S10

5.0.6 L14 - Phase Lock Loop B13230S13

5.0.7 L14 1200/1800 Ø Error Ind. B13230S18

B				REVISED EXTENSIVELY

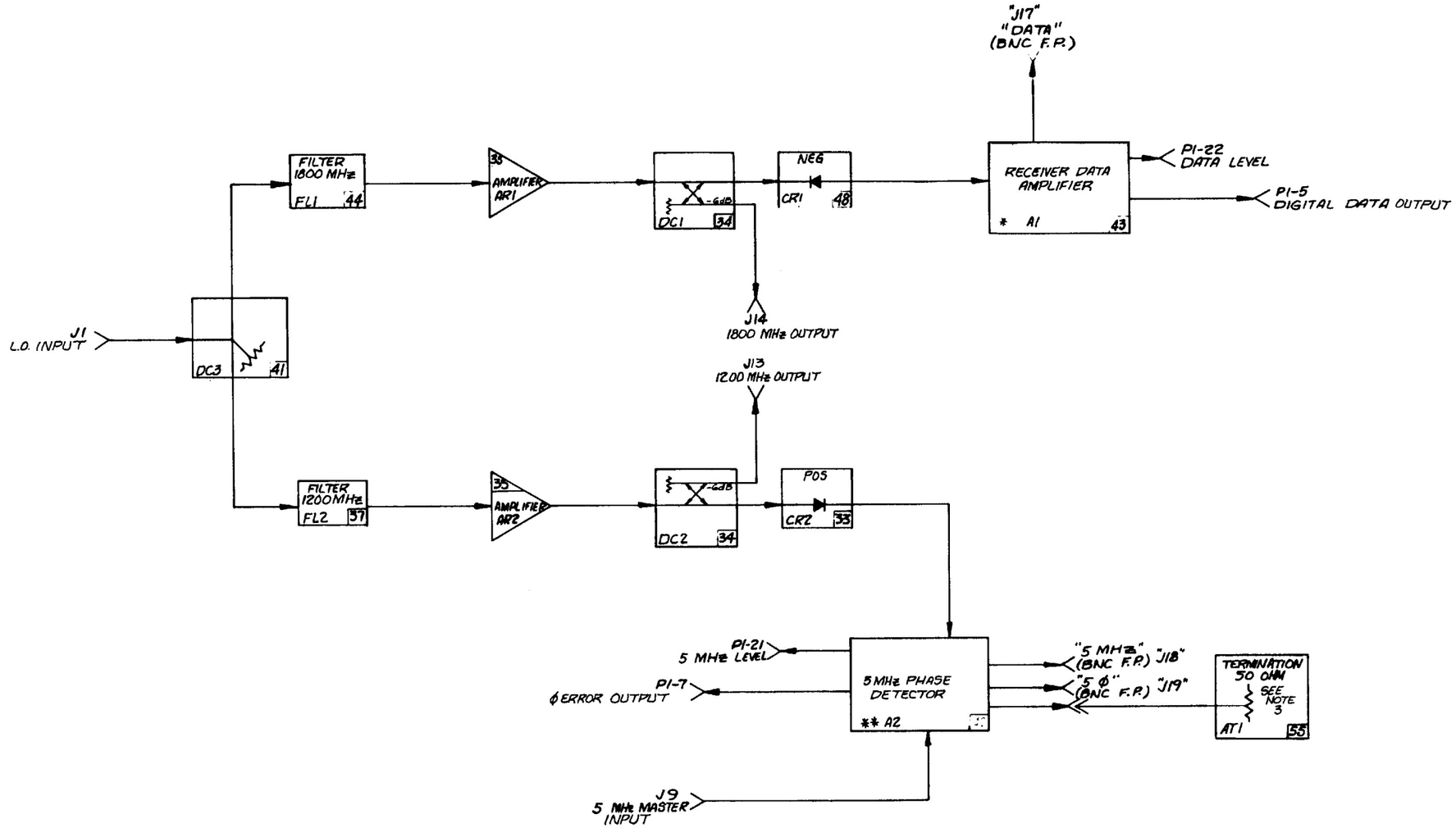

NOTES:
1. J1, J9, J13 & J14 ARE ON REAR PANEL
2. P1 — 42 PIN CONNECTOR
3. AT1 MOUNTED ON A2
4. * = ASSY DWG B13230P28, BOM A13230Z16, SCHEMATIC DRAWING B1323053
   ** = ASSY DWG B13230P23, BOM A13230Z18, SCHEMATIC DRAWING C1323084
5. J17, J18, J19 BNC ON FRONT PANEL
6. ——► ARROW INDICATES SIGNAL FLOW
7. FL2 37
   ITEM NUMBERS PER BOM A13230Z7
   REF DESIG PER IEEE NO. 315 & NRAO SPEC

NEXT ASSY	USED ON

UNLESS OTHERWISE SPECIFIED DIMENSIONS ARE IN INCHES
TOLERANCES ANGLES ±
3 PLACE DECIMALS .XXX ±
2 PLACE DECIMALS .XX ±
1 PLACE DECIMALS .X ±

MATERIAL:

FINISH:

VLA PROJECT: L9 L.O. RECEIVER

TITLE: BLOCK DIAGRAM

NATIONAL RADIO ASTRONOMY OBSERVATORY
CHARLOTTESVILLE, VA. 22901

DRAWN BY: DATE 22 MAR 79
DESIGNED BY: DATE 2-17-78
APPROVED BY: DATE 3/20/79

SHEET NUMBER | DRAWING NUMBER B13230B7 | REV B | SCALE

DRAWING 40-22 2-69B4

REV	DATE	DRAWN BY	APPRV'D BY	DESCRIPTION
B	12-10-75	[illegible]	[illegible]	REVISED EXTENSIVELY

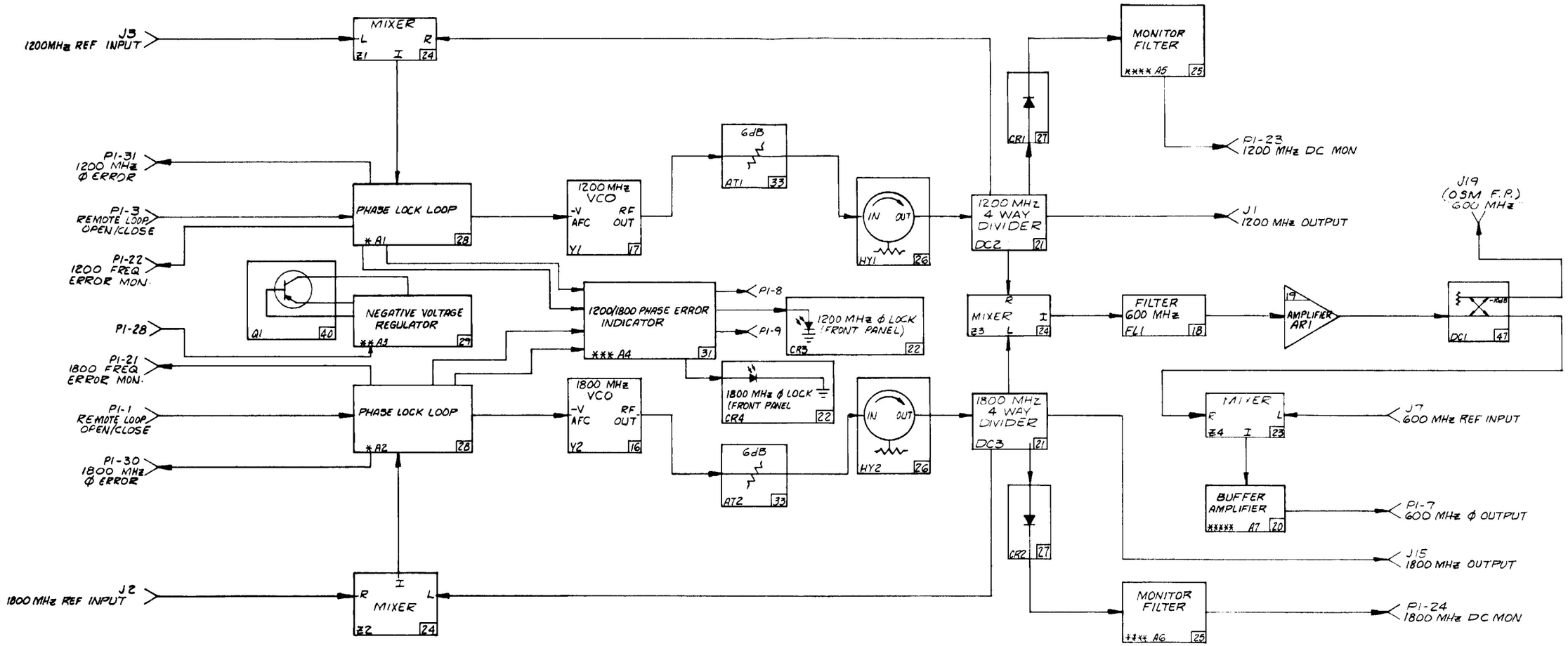

NOTES:
1. J1, J2, J3, J7 & J15 ARE ON REAR PANEL.
2. P1 – 42 PIN CONNECTOR
3. ——▶ ARROW INDICATES SIGNAL FLOW
4. * = ASSY DWG C13230P37, BOM A13230Z32, SCHEMATIC DWG B13230513
   ** = ASSY DWG B13230P38, BOM A13230Z28, SCHEMATIC DWG B13230510
   *** = ASSY DWG B13230P46, BOM A13230Z39, SCHEMATIC DWG B13230518
   **** = ASSY DWG C13230P39, BOM A13230Z31, SCHEMATIC DWG B13230512
   ***** = ASSY DWG B13230P24, BOM A13230Z24, SCHEMATIC DWG B1323058
5. J19 OSM ON FRONT PANEL
6. Z2 24
   ITEM NUMBERS PER BOM A13230Z33
   REF DESIG. PER IEEE NO. 315 & NRAO SPEC

NEXT ASSY	USED ON

UNLESS OTHERWISE SPECIFIED DIMENSIONS ARE IN INCHES
TOLERANCES: ANGLES ±
3 PLACE DECIMALS .XXX ±
2 PLACE DECIMALS .XX ±
1 PLACE DECIMALS .X ±
MATERIAL
FINISH

VLA PROJECT: L14 CENTRAL L.O. FILTER

TITLE: BLOCK DIAGRAM

NATIONAL RADIO ASTRONOMY OBSERVATORY
CHARLOTTESVILLE, VA. 22901

DRAWN BY: [illegible] DATE: 4 JUNE 75
DESIGNED BY: DATE:
APPROVED BY: [illegible] DATE: 9/22/77

SHEET NUMBER | DRAWING NUMBER D13230812 REV B | SCALE

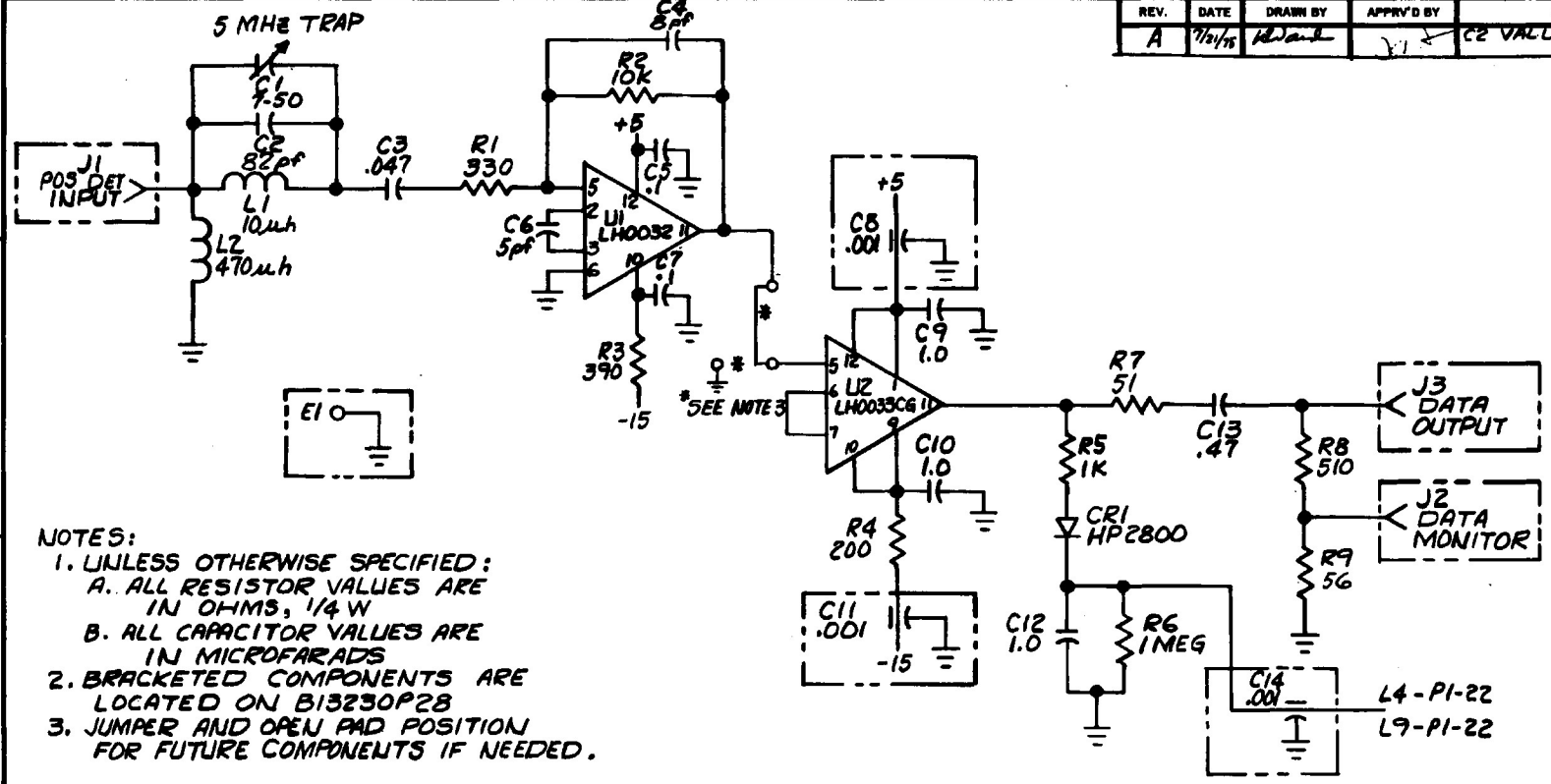

NOTES:
1. UNLESS OTHERWISE SPECIFIED:
   A. ALL RESISTOR VALUES ARE IN OHMS, 1/4 W
   B. ALL CAPACITOR VALUES ARE IN MICROFARADS
2. BRACKETED COMPONENTS ARE LOCATED ON B13230P28
3. JUMPER AND OPEN PAD POSITION FOR FUTURE COMPONENTS IF NEEDED.

REV.	DATE	DRAWN BY	APPRV'D BY	DESCRIPTION
A	7/21/75			C2 VALUE WAS 75 pf

LAST COMPONENT DESIG USED						
C	CR	J	L	R	U	
14	1	3	2	9	2	

NEXT ASSY	USED ON

UNLESS OTHERWISE SPECIFIED DIMENSIONS ARE IN INCHES
TOLERANCES: ANGLES ±
3 PLACE DECIMALS (.XXX): ±
2 PLACE DECIMALS (.XX): ±
1 PLACE DECIMALS (.X): ±

MATERIAL:

FINISH:

VLA PROJECT: L4 L.O. RECEIVER, L9 CENTRAL L.O. RECEIVER

TITLE: RECEIVER DATA AMPLIFIER SCHEMATIC

NATIONAL RADIO ASTRONOMY OBSERVATORY
CHARLOTTESVILLE, VA. 22901

DRAWN BY: DWard — DATE: 6/17/75
DESIGNED BY: S. WEINREB — DATE: 6/16/75
APPROVED BY: — DATE:

SHEET NUMBER | DRAWING NUMBER B13230S3 | REV. A | SCALE

BRUNING 40-22 24984

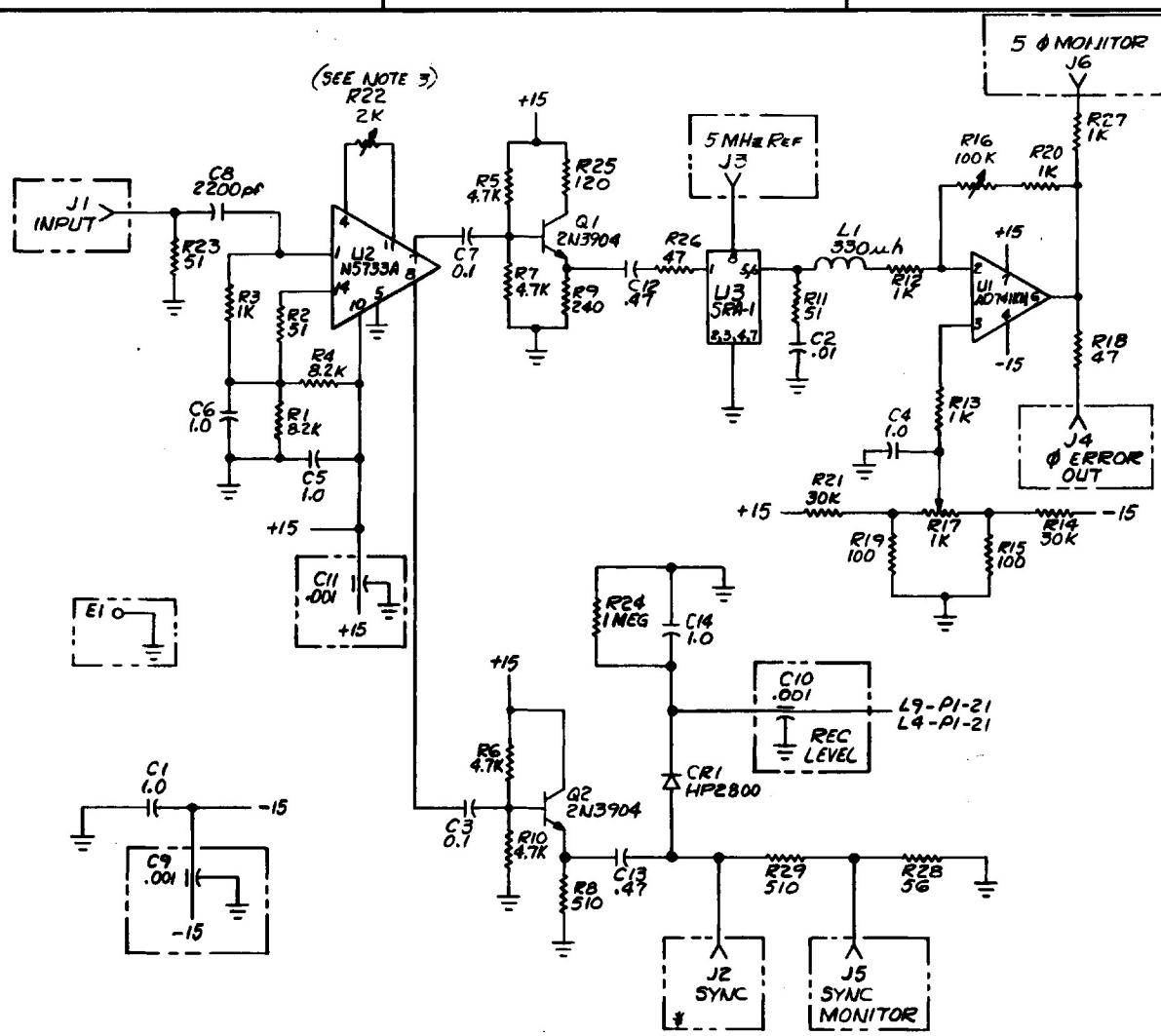

* NOT USED ON "L9"

NOTES:
1. UNLESS OTHERWISE SPECIFIED:
   A. ALL RESISTOR VALUES ARE IN OHMS, 1/4 W
   B. ALL CAPACITOR VALUES ARE IN MICROFARADS
2. BRACKETED COMPONENTS ARE LOCATED ON B13230P23
3. PRESET R22 TO 1.1K

REV.	DATE	DRAWN BY	APPRV'D BY	DESCRIPTION
A	5/24/76	[illegible]	[illegible]	R1, R2 & R4 VALUE WAS 1K

LAST COMPONENT DESIG USED							
R	C	CR	U	Q	L	J	
29	14	1	3	2	1	6	

NEXT ASSY	USED ON

UNLESS OTHERWISE SPECIFIED DIMENSIONS ARE IN INCHES
TOLERANCES: ANGLES ±
3 PLACE DECIMALS (.XXX): ±
2 PLACE DECIMALS (.XX): ±
1 PLACE DECIMALS (.X): ±

MATERIAL:

FINISH:

PROJECT: VLA — L4, L9 L.O. RECEIVER

TITLE: 5 MHz ϕ DETECTOR SCHEMATIC

NATIONAL RADIO ASTRONOMY OBSERVATORY
CHARLOTTESVILLE, VA. 22901

DRAWN BY [illegible] DATE 7/6 June 76
DESIGNED BY J. WEINREB DATE 5/24/76
APPROVED BY DATE

SHEET NUMBER — DRAWING NUMBER C1323054 — REV. A — SCALE

DRAWING 40-32 24804

LAST COMPONENT DESIG USED					
C	R	U	Q	E	
2	5	1	2	6	

NOTES:
1. UNLESS OTHERWISE SPECIFIED:
   A. ALL RESISTOR VALUES ARE IN OHMS, 1/4W
   B. ALL CAPACITOR VALUES ARE IN MICROFARADS

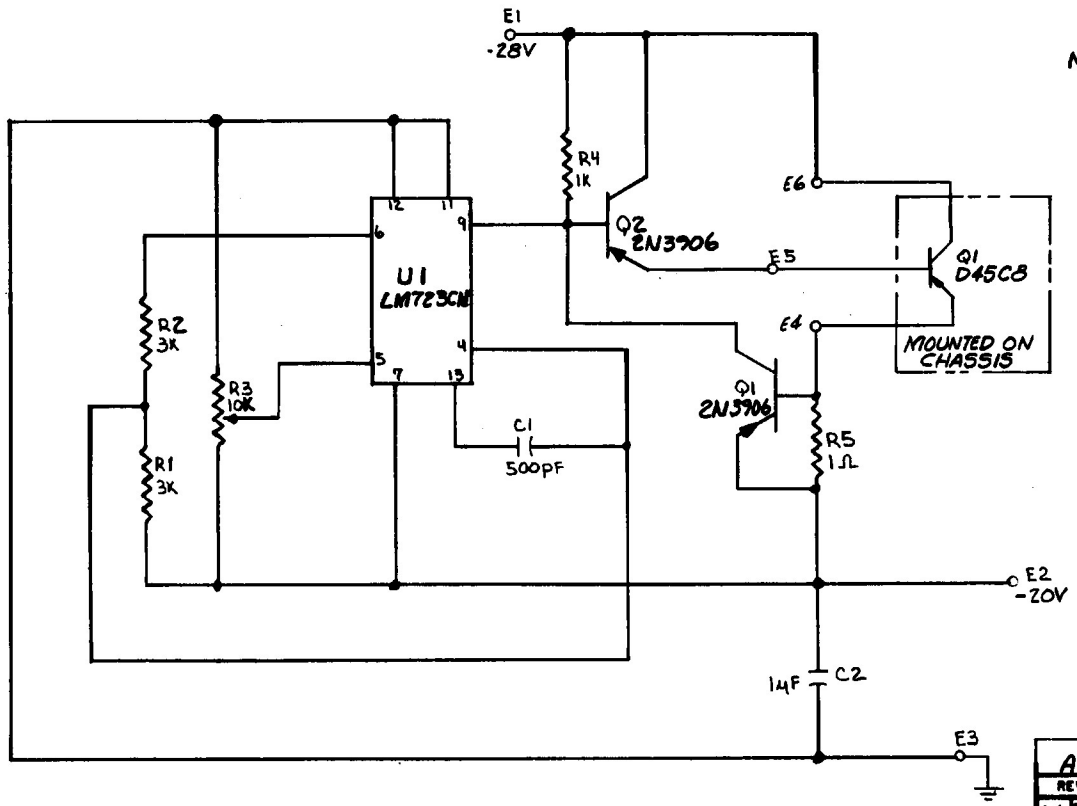

REV.	DATE	DRAWN BY	APPRV'D BY	DESCRIPTION
A	7/31/76	[illegible]	[illegible]	ADDED "Q1" & VALUES TO TERMINALS

VLA PROJECT: L14 CENTRAL LO TRANSMITTER

TITLE: NEGATIVE VOLTAGE REGULATOR SCHEMATIC

NATIONAL RADIO ASTRONOMY OBSERVATORY
CHARLOTTESVILLE, VA. 22901

DRAWN BY: T. HUZGK — DATE: 11-27-74
DESIGNED BY: [illegible] — DATE: 6-17-76
APPROVED BY: [illegible] — DATE: 9/24/76

SHEET NUMBER: — DRAWING NUMBER: B13230S10 — REV. A — SCALE —

5/76 A

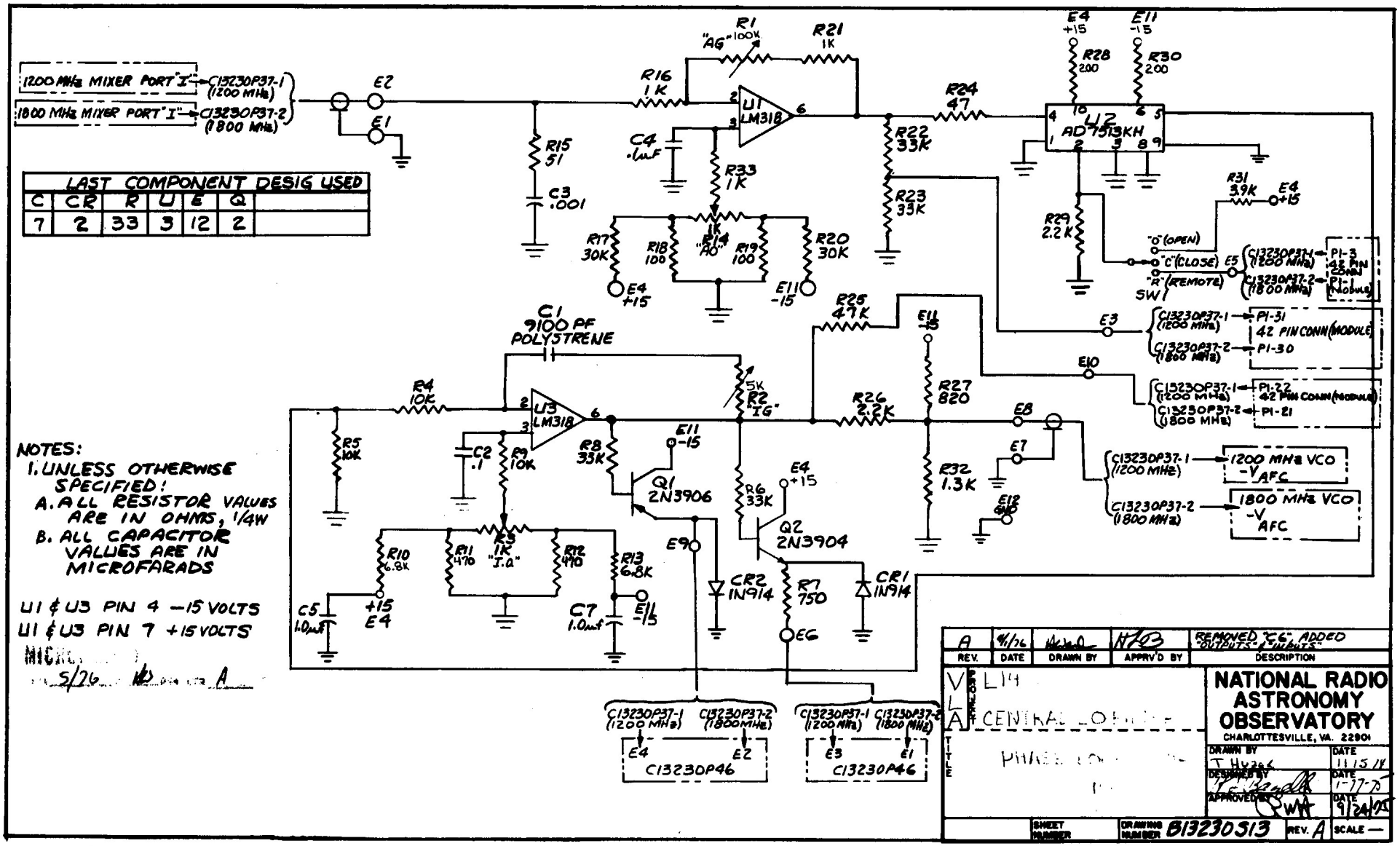
1200 MHz MIXER PORT "I" → C13230P37-1 (1200 MHz)
1800 MHz MIXER PORT "I" → C13230P37-2 (1800 MHz)
E2
E1
R15 51
C3 .001
R16 1K
R1 "AG" 100K
R21 1K
U1 LM318
C4 .1uF
R33 1K
R14 1K "AO"
R17 30K
R18 100
R19 100
R20 30K
E4 +15
E11 -15
R22 33K
R23 33K
R24 47
E4 +15
E11 -15
R28 200
R30 200
U2 AD7513KH
R29 2.2K
R31 3.9K
"O" (OPEN)
"C" (CLOSE)
"R" (REMOTE)
SW1
E5
C13230P37-1 (1200 MHz) → P1-3
C13230P37-2 (1800 MHz) → P1-1
42 PIN CONN (MODULE)
E3
C13230P37-1 (1200 MHz) → P1-31
C13230P37-2 (1800 MHz) → P1-30
42 PIN CONN (MODULE)
E10
C13230P37-1 (1200 MHz) → P1-22
C13230P37-2 (1800 MHz) → P1-21
42 PIN CONN (MODULE)
C1 9100 PF POLYSTRENE
R4 10K
U3 LM318
R5 10K
C2 .1
R9 10K
R8 33K
E11 -15
Q1 2N3906
5K R2 "IG"
R25 47K
R26 2.2K
R27 820
E8
E7
R32 1.3K
E12 GND
C13230P37-1 (1200 MHz) → 1200 MHz VCO -V AFC
C13230P37-2 (1800 MHz) → 1800 MHz VCO -V AFC
R6 33K
E4 +15
Q2 2N3904
E9
CR2 1N914
R7 750
CR1 1N914
E6
R10 6.8K
R11 470
R23 1K "I.Q"
R12 470
R13 6.8K
C5 1.0uf
+15 E4
C7 1.0uf
E11 -15
C13230P37-1 (1200 MHz)
C13230P37-2 (1800 MHz)
E4
E2
C13230P46
C13230P37-1 (1200 MHz)
C13230P37-2 (1800 MHz)
E3
E1
C13230P46
NOTES:
1. UNLESS OTHERWISE SPECIFIED:
A. ALL RESISTOR VALUES ARE IN OHMS, 1/4W
B. ALL CAPACITOR VALUES ARE IN MICROFARADS
U1 & U3 PIN 4 -15 VOLTS
U1 & U3 PIN 7 +15 VOLTS
LAST COMPONENT DESIG USED
C 7
CR 2
R 33
U 3
E 12
Q 2
A 11/76 REMOVED "CC" ADDED "OUTPUTS-A" INPUTS
REV. DATE DRAWN BY APPRV'D BY DESCRIPTION
NATIONAL RADIO ASTRONOMY OBSERVATORY
CHARLOTTESVILLE, VA. 22901
DRAWN BY DATE
DESIGNED BY DATE
APPROVED BY DATE
SHEET NUMBER
DRAWING NUMBER B13230513
REV. A
SCALE —

REV.	DATE	DRAWN BY	APPRV'D BY	DESCRIPTION
A	9/26	[illegible]	11/03	ADDED OUTPUTS & INPUTS

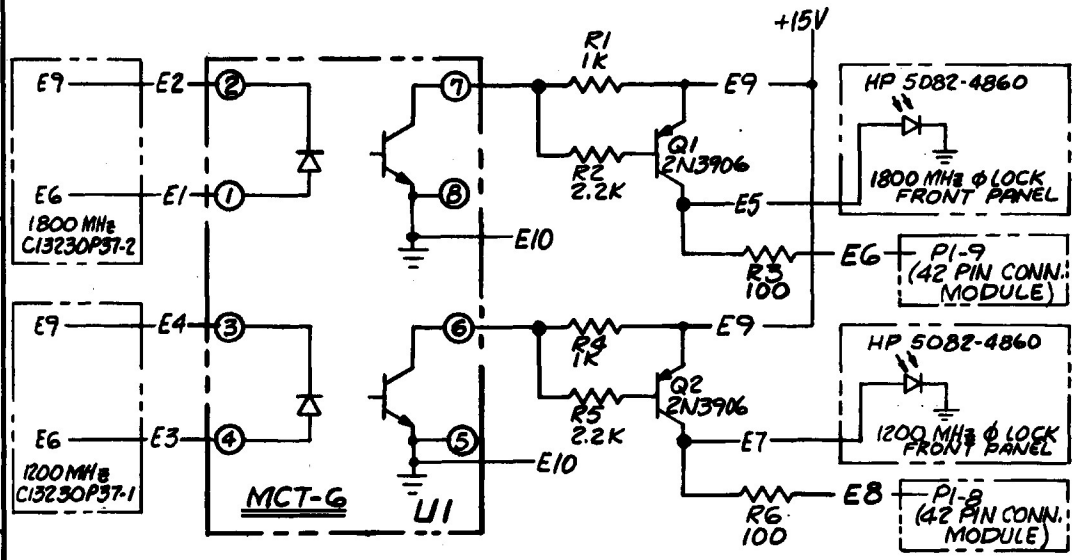

LAST COMPONENT DESIG USED				
R	E	U	Q	
6	10	1	2	

NOTES:
1. UNLESS OTHERWISE SPECIFIED:
   A. ALL RESISTOR VALUES ARE IN OHMS, 1/4 W

5/76 [illegible] A

NEXT ASSY	USED ON

UNLESS OTHERWISE SPECIFIED DIMENSIONS ARE IN INCHES
TOLERANCES: ANGLES ±
3 PLACE DECIMALS (.XXX): ±
2 PLACE DECIMALS (.XX): ±
1 PLACE DECIMALS (.X): ±

MATERIAL:

FINISH:

PROJECT: VLA L14 CENTRAL LO FILTER

TITLE: 1200/1800 ϕ ERROR INDICATOR SCHEMATIC

NATIONAL RADIO ASTRONOMY OBSERVATORY
CHARLOTTESVILLE, VA. 22901

DRAWN BY [illegible] DATE 20 June 75
DESIGNED BY [illegible] DATE 9/24/95
APPROVED BY [illegible] DATE "

SHEET NUMBER | DRAWING NUMBER B13230518 | REV. A | SCALE

BRUNING 40-22 24984

6.0 BILLS OF MATERIALS INCLUDED

6.0.1 L9

LO Receiver	A13230Z7	pp.3-4
Data Amplier	A13230Z17	p.2
Data Amplifier	A13230Z16	pp.1-2
5 MHz Ø Det.	A13230Z18	p.2
	A13230Z19	pp.2-3

6.0.2 L14

Central LO Filter	A13230Z33	pp.2-4
Monitor Filter	A13230Z31	p.2
Buffer Amp	A13230Z24	p.1
Buffer Amp Board	A13230Z25	pp.1-2
Neg. Volt. Reg.	A13230Z28	p.1
Phase Lock Loop	A13230Z32	pp.1-3
1200/1800 Indicator	A13230Z39	p.1

BILL OF MATERIAL

NATIONAL RADIO ASTRONOMY OBSERVATORY

[x] ELECTRICAL [ ] MECHANICAL BOM # A13230Z7 REV B DATE 3/3/75 PAGE 3 OF 4

ITEM #	REF DESIG	MANUFACTURER	MFG PART #	DESCRIPTION	TOTAL QUA	
33	CR2	AERTECH	DO 102BR	Diode Detector, POS	1	
34	DC1,DC2	OMNI-SPECTRA	OSM 20063-6	Coaxial Directional Coupler	2	
35	AR1,AR2	Avantek	ASD-8199M	1.0-2.0 GHz Amplifier	2	
36	W	Uniform Tubes	UT-141	Semi-Rigid Cable .141 DIA	6'	
37	FL2	K & L Microwave, Inc.	4B120-1200/120-0	Filter, Band Pass (with clip)	1	
38	J1,J9, J13,J14	OMNI-SPECTRA	OMQ 3043-75	Jack	4	
39	H	A.M.P.	AMP 202394-2	Power Connector Metal Guard	1	
40	P1	A.M.P.	AMP 204186-5	Bin/Module Power Connector	1	
41	DC3	OMNI-SPECTRA	OSM 20493	Coaxial Power Divider	1	
42	A2	NRAO	A13230Z18	5 MHZ Phase Detector (B13230P23)	1	
43	A1	NRAO	A13230Z16	RECEIVER DATA AMP ASSY (B13230P28)	1	
44	FL1	K & L Microwave, Inc.	4B120-1800/120-0	Band Pass Filter (with clip)	1	
45	P	OMNI-SPECTRA	OSM 531-3	Rt. Angle Plug/flex cable	4	
46	P	OMNI-SPECTRA	OSM 218	Plug-Plug Connector	2	
47	P	OMNI-SPECTRA	OSM 201-1A	Plug/.141 Cable	16	
48	CR1	AERTECH	DO 102B	DIODE DETECTOR, NEG	1	
49	P	AMP	201143-5	COAX PIN	2	

BILL OF MATERIAL

NATIONAL RADIO ASTRONOMY OBSERVATORY

☒ ELECTRICAL ☐ MECHANICAL BOM # A1323027 REV B DATE 9/18/75 PAGE 4 OF 4

ITEM #	REF DESIG	MANUFACTURER	MFG PART #	DESCRIPTION	TOTAL QUA	
50	P	AMP	204188-1	CRIMP, PIN	5	
51	P	AMP	203964-6	SOCKET GUIDE	2	
52	P	AMP	200833-4	PIN, GUIDE	1	
53	P	AMP	202514-1	PIN, GUIDE	1	
54	P	OMNI SPECTRA	511-3	PLUG, CONNECTOR/FLEX CABLE	1	
55	AT1	OMNI SPECTRA	20020P-1	TERMINATION 50 OHM	1	
56	J17, J18, J19	KINGS	KC-19-153	BNC, CONNECTOR	3	
57	DSH	NRAO	D1323087	BLOCK DIAGRAM	REF	
58	DWW	NRAO	A13230W7	WIRE LIST	REF	
59						
60						
61						
62						
63						
64						
65						
66						

BILL OF MATERIAL

NATIONAL RADIO ASTRONOMY OBSERVATORY

☒ ELECTRICAL ☐ MECHANICAL BOM # A13230217 REV A DATE 9/3/75 PAGE 2 OF 2

ITEM #	REF DESIG	MANUFACTURER	MFG PART #	DESCRIPTION	TOTAL QUA	
16	C5, 7	ERIE	8121-050-650-104M	CAPACITOR 50V .1μf	2	
17	C6	ARCO	CM04CD050D03	CAPACITOR 5% MICA 5pf	1	
18	C9,10,12	ERIE	8131-050-650-105M	CAPACITOR 50V 1.0μf	3	
19	C13	ERIE	8121-050-650-474M	CAPACITOR 50V .47μf	1	
20	U1	NATIONAL	LH0032CG	IC	1	
21	U2	NATIONAL	LH0033CG	IC	1	
22	L1	MILLER	9230-44	CHOKE 10μh	1	
23	L2	MILLER	9230-84	CHOKE 470μh	1	
24	CR1	AERTECH	A25800	DIODE	1	
25		ROBINSON/NUGENT	MP-12100	IC SOCKET 12 PIN	2	
26		NRAO	B1323053	SCHEMATIC	REF	
27		NRAO	B13230AB9	ARTWORK	REF	
28		BELDEN	8020	BUS BAR WIRE 20 AWG	1"	
29						
30						
31						
32						

3/1/76 KW A

BILL OF MATERIAL

NATIONAL RADIO ASTRONOMY OBSERVATORY

[ ] ELECTRICAL [X] MECHANICAL BOM # A13230Z16 REV A DATE 2/28/75 PAGE 1 OF 2

L4 LO Receiver

MODULE # L9 NAME Control LO Receiver DWG # _____ SUB ASMB RECEIVER DATA AMPLIFIER DWG # B13230P28

SCHEMATIC DWG # B13230S3 LOCATION _____ QUA/SYSTEM _____ PREPARED BY Harold Ward APPROVED RWH

ITEM #	REF DESIG	MANUFACTURER	MFG PART #	DESCRIPTION	TOTAL QUA	
1		NRAO	A13230Z16	Assembly (B13230P28)	-	
2		NRAO	B13230M89	End Panel	1	
3		NRAO	B13230M30	Bottom Plate	1	
4		NRAO	B13230M39	Side Panel	1	
5		NRAO	B13230M27	Top Cover	1	
6			½"Lg - 4-40	Pan Head, Stainless Steel Screw	8	
7			.375 Lg 4-40	Flat Head, Stainless Steel Screw	8	
8		NRAO	B13230M29	Side Panel	1	
9		NRAO	B13230M90	End Panel	1	
10						
11						
12						
13						
14						
15						

MIC[illegible]

DATE 3/1/76 [illegible] REV LTR A

BILL OF MATERIAL

NATIONAL RADIO ASTRONOMY OBSERVATORY

[X] ELECTRICAL [ ] MECHANICAL BOM # A13230Z16 REV A DATE 11-7-74 PAGE 2 OF 2

ITEM #	REF DESIG	MANUFACTURER	MFG PART #	DESCRIPTION	TOTAL QUA	
16		NRAO	A13230Z17	P.C. Board Assy (B13230P29)	1	
17	J1, J2, J3	Omni-Spectra	OSM 211	SMA Connector	3	
18	C8, C9 C7	Spectrum Control	FB3B102W	.001MF Feed thru Cap	3	
19	E1	NRAO	B13230M98	Turret Terminal	1	
20		NRAO	B13230S3	Schematic	ref	
21						
22						
23						
24						
25						
26						
27						
28						
29						
30						
31						
32						

3/1/76 A

BILL OF MATERIAL

NATIONAL RADIO ASTRONOMY OBSERVATORY

[x] ELECTRICAL [ ] MECHANICAL BOM # A13230Z18 REV A DATE 3/3/75 PAGE 2 OF 2

ITEM #	REF DESIG	MANUFACTURER	MFG PART #	DESCRIPTION	TOTAL QUA	
16	C9,C10 C11	Spectrum Control	F3B102W	.001μF Feed Through Cap	3	
17	E1	NRAO	B13230M98	Turret Terminal	1	
18	J1,J2,J3, J4,J5,J6	OMNI-SPECTRA	OSM 211	SMA Connector	6	
19		NRAO	A13230Z19	Board Assy.	1	
20						
21		NRAO	C13230S4	Schematic	Ref	
22						
23						
24						
25						
26						
27						
28						
29						
30						
31						
32						

BILL OF MATERIAL

NATIONAL RADIO ASTRONOMY OBSERVATORY

☒ ELECTRICAL ☐ MECHANICAL BOM # A13230719 REV B DATE 3 SEPT 75 PAGE 2 OF 3

ITEM #	REF DESIG	MANUFACTURER	MFG PART #	DESCRIPTION	TOTAL QUA	
16	R28		RCR07-560-5S	RESISTOR 1/4 W 56 OHMS	1	
17	C1,4,5, 6,14	ERIE	8131-050-651-105M	CAPACITOR 50 V 1.0 µf	5	
18	C2	ERIE	8121-050-651-103M	CAPACITOR 50V .01 µf	1	
19	C3,7	ERIE	8121-050-651-104M	CAPACITOR 50V .1 µf	2	
20	C8	ERIE	8121-050-651-222M	CAPACITOR 50V 2200 pf	1	
21	C12,13	ERIE	8121-050-651-474M	CAPACITOR 50V .47 µf	2	
22	CR1	AERTECH	A2S800	DIODE	1	
23	U1	SIGNETICS	AD741KN	IC	1	
24	U2		µA733CN	IC	1	
25	U3	MCL	SRA-1	MIXER	1	
26	Q1,2	MOTOROLA	2N3904	TRANSISTOR	2	
27	L1	MILLER	9230-80	CHOKE 330 µh	1	
28		ROBINSON NUGENT	ICN-143-S3	IC SOCKET 14 PIN	1	
29		ROBINSON NUGENT	ICN-083-S3	IC SOCKET 8 PIN	1	
30		CINCH	3-LPS-B	TRANSISTOR SOCKET	2	
31		NRAO	C13230S4	SCHEMATIC	REF	
32		NRAO	B13230AB4	ARTWORK	REF	

DATE 3/1/76 REV LTR A

BILL OF MATERIAL

NATIONAL RADIO ASTRONOMY OBSERVATORY

☒ ELECTRICAL ☐ MECHANICAL BOM # A132303/9 REV B DATE 3/29/76 PAGE 3 OF 3

ITEM #	REF DESIG	MANUFACTURER	MFG PART #	DESCRIPTION	TOTAL QUA	
33	R1, R4		RCR07-822-5S	RESISTOR 1/4W 8.2K	2	
34						
35						
36						
37						
38						
39						
40						
41						
42						
43						
44						
45						
46						
47						
48						
49						

BILL OF MATERIAL

NATIONAL RADIO ASTRONOMY OBSERVATORY

[X] ELECTRICAL [ ] MECHANICAL BOM # A13230Z33 REV B DATE 2/28/75 PAGE 2 OF 4

ITEM #	REF DESIG	MANUFACTURER	MFG PART #	DESCRIPTION	TOTAL QUA	
16	Y2	Solid State Technology	SSC-0223(A)	1800 MHZ VCO	1	
17	Y1	Solid State Technology	SSC-0222	1200 MHZ VCO	1	
18	FL1	K & L Microwave	4B120-600/100-0/0	Band pass filter (with clip)	1	
19	AR1	Aventek	UTA 8712	Amplifier	1	
20	A7	NRAO	A13230Z24	Buffer Amplifier (B13230P24)	1	
21	DC2,DC3	Vectronic Microwave Corp.	PD8304-4M	4 Way power divider	2	
22	CR3,CR4	HEWLETT PACKARD	5082-4860	LED, W/RESISTOR	2	
23	Z4	Wakins - Johnson	MIA	Mixer	1	
24	Z1,2,3	Wakins - Johnson	MIJ	Mixer	3	
25	A5, A6	NRAO	A13230Z31	Monitor Filter (C13230P39)	2	
26	HY1, HY2	Addington Labs	101102660	1 - 2 GHZ Circ.	2	
27	CR1,CR2	Omni-Spectra	20090	Crystal Diode Detector	2	
28	A1, A2	NRAO	A13230Z32	Phase Lock Loop (C13230P37)	2	
29	A3	NRAO	A13230Z28	Neg. Voltage Reg. (B13230P38)	1	
30	P	Omni-Spectra	OSM 201-1A	Plug/.141" Dia. Cable	18	
31	A4	NRAO	A13230Z39	1200/1800 Φ ERROR INDICATOR (B13230P46)	1	
32	P	Omni-Spectra	OSM 531-3	Rt. Angle plug/flex cable	5	

BILL OF MATERIAL

NATIONAL RADIO ASTRONOMY OBSERVATORY

[X] ELECTRICAL [ ] MECHANICAL BOM # A13230Z33 REV B DATE 2/28/75 PAGE 3 OF 4

ITEM #	REF DESIG	MANUFACTURER	MFG PART #	DESCRIPTION	TOTAL QUA	
33	AT1,2	Narda	4772-6	Micro-Pad 6DB Atten Pad	2	
34	J	Omni-Spectra	OMQ 3043-75	Jacks	5	
35	W	Uniform Tubes	UT-141	Semi-rigid cable .141"	6½'	
36	P	Omni-Spectra	OSM-218	Male-Male Connector	1	
37	P	AMP	AMP 202394-2	Power Conn. Metal Guard	1	
38	P	AMP	AMP 204186-5	Bin/Module Power Connector	1	
39	P	Omni-Spectra	OSM-219	Right Angle ADAPTER	1	
40	Q1	General Electric	D45C8	Transistor	1	
41	P	AMP	201143-5	Coax Pin	1	
42	P	AMP	204188-1	Crimp Pin	12	
43	P	AMP	203964-6	Socket, Guide	2	
44	P	AMP	200833-4	Pin, Guide	1	
45	P	AMP	202514-1	Pin, Guide	1	
46	P	OMNI SPECTRA	OSM 201-1	CONNECTOR, PLUG .141 SEMI	17	
47	DC1	ANZAC	DGG-10-4	COUPLER, DIRECTIONAL 10dB	1	
48	DSH	NRAO	D13230B12	BLOCK DIAGRAM	REF	
49	DWW	NRAO	A13230W10	WIRE LIST	REF	

BILL OF MATERIAL

NATIONAL RADIO ASTRONOMY OBSERVATORY

[ ] ELECTRICAL [X] MECHANICAL BOM # A13230Z33 REV B DATE 2/28/75 PAGE 4 OF 4

ITEM #	REF DESIG	MANUFACTURER	MFG PART #	DESCRIPTION	TOTAL QUA	
50	H		#4-40 x .750	Pan Head Stainless Steel Screw	1	
51			#4-40 x .375	Pan Head Stainless Steel Screw	1	
52			#4-40	Nut	1	
53			#4	Internal tooth lock washer	20	
54			#2	Internal tooth lock washer	20	
55	H		#2-56 x .250LG	Pan Head S.S. Screw	20	
56	MPM	NRAO	B13050M4	Guide	4	
57	H		#6	Internal tooth lock washer	16	
58			#6-32 x .625LG	Pan Head Stainless Steel Screw	4	
59			#6-32 x .875LG	Pan Head Stainless Steel Screw	4	
60	H		#6-32 x .250LG	Hex Socket Head S.S. Set Screw	2	
61	J19	OMNI SPECTRA	OSM 208 A	CONNECTOR, BLK HD MT.	1	
62		GE	13888189GR4	HARDWARE	1	
63						
64						
65						
66						

BILL OF MATERIAL

NATIONAL RADIO ASTRONOMY OBSERVATORY

[X] ELECTRICAL [ ] MECHANICAL BOM # A13230Z31 REV A DATE 1/15/75 PAGE 2 OF 2

ITEM #	REF DESIG	MANUFACTURER	MFG PART #	DESCRIPTION	TOTAL QUA	
16		Omni-Spectra	OSM-211	SMA Connector	1	
17	C1	Spectrum Control	FB3B102W	Feed thru cap. .001 MF	1	
18		NRAO	B13230M98	Turret terminal, 4-40THD	1	
19	R1		RCR07 473-5S	Resistor 1/4W 47K	1	
20	R2		RCR07 241-5S	Resistor 1/4W 240 OHMS	1	
21						
22						
23						
24						
25						
26						
27						
28						
29						
30						
31						
32						

BILL OF MATERIAL

NATIONAL RADIO ASTRONOMY OBSERVATORY

[X] ELECTRICAL [ ] MECHANICAL BOM # A13230Z24 REV _____ DATE 3/3/75 PAGE 1 OF 2

MODULE # L4 NAME LO Receiver DWG # _____ SUB ASMB Buffer Amplifier DWG # B13230P24

SCHEMATIC DWG # B13230S8 LOCATION _____ QUA/SYSTEM _____ PREPARED BY [illegible] APPROVED [illegible]

ITEM #	REF DESIG	MANUFACTURER	MFG PART #	DESCRIPTION	TOTAL QUA	
1		NRAO	A13230Z24	Assembly (B13230P24)	--	
2		NRAO	A13230Z25	P. C. Board Assy. (B13230P35)	1	
3	J1, J2	OMNI SPECTRA	03M-211	SMA Connector	2	
4	C2, C3	Spectrum Control	FB3B10F102W	.001μF Feed Through	2	
5	E1	Keystone	1587-1	Turret Terminal	1	
6		NRAO	B13230S8	Schematic	Ref	
7						
8						
9						
10						
11						
12						
13						
14						
15						

BILL OF MATERIAL

NATIONAL RADIO ASTRONOMY OBSERVATORY

[X] ELECTRICAL [ ] MECHANICAL BOM # A13230Z25 REV A DATE 2/28/75 PAGE 1 OF 2

MODULE # L4 NAME LO Receiver DWG # D13230P4 SUB ASMB Buffer Amplifier DWG # B13230P35

SCHEMATIC DWG # B13230S8 LOCATION _____ QUA/SYSTEM _____ PREPARED BY [signature] APPROVED [signature]

ITEM #	REF DESIG	MANUFACTURER	MFG PART #	DESCRIPTION	TOTAL QUA	
1		NRAO	A13230Z25	Assembly (B13230P35)	-	
2	R1, R10		RCR07 303-5S	Resistor 1/4W 30 K	2	
3	R2, R9		RCR07 101-5S	Resistor 1/4W 100 OHMS	2	
4	R3, R7, R4, R12		RCR07 102-5S	Resistor 1/4 W 1K	4	
5	R8		RCR07 470-5S	Resistor 1/4 W 47 OHMS	1	
6	R5	Bourns	3339H-1-102	1 K ohm potentiometer	1	
7	R6	Bourns	339H-1-104	100 K ohm potentiometer	1	
8	C1	Erie	831-050-651-105M	1.0 MF 50 v Ceramic Capacitor	1	
9	U1	National Circuits	LM318H	I.C.	1	
10		NRAO	B13230M58	Board P.C.	1	
11		Robinson Nugent	DP5178	I.C. Socket 8 Pin	1	
12	C4	Erie	8101-050-651-102M	.001mF. Cap 50V ceramic	1	
13	R11		RCR05 510-5S	Resistor 1/8 W 51 OHMS	1	
14		Keystone	1589-2	Swage Type Threaded Standoff	2	
15		NRAO	B13230S8	Schematic	Ref	

DATE 3/15/75 REV. LTR A

BILL OF MATERIAL

NATIONAL RADIO ASTRONOMY OBSERVATORY

[X] ELECTRICAL [ ] MECHANICAL BOM # A13230Z25 REV A DATE 2/28/75 PAGE 2 OF 2

ITEM #	REF DESIG	MANUFACTURER	MFG PART #	DESCRIPTION	TOTAL QUA	
16		NRAO	B13230AB6	Artwork Master	Ref	
17						
18						
19						
20						
21						
22						
23						
24						
25						
26						
27						
28						
29						
30						
31						
32						

BILL OF MATERIAL

NATIONAL RADIO ASTRONOMY OBSERVATORY

[X] ELECTRICAL [ ] MECHANICAL BOM # A13230Z28 REV A DATE 2/28/75 PAGE 1 OF 2

MODULE # L-14 NAME Central LO Filter DWG # A13230Z33 SUB ASMB Neg. Volt. Reg. DWG # B13230P38

SCHEMATIC DWG # B13230S10 LOCATION _____ QUA/SYSTEM _____ PREPARED BY _____ APPROVED _____

ITEM #	REF DESIG	MANUFACTURER	MFG PART #	DESCRIPTION	TOTAL QUA	
1		NRAO	A13230Z28	Assembly (B13230P38)	-	
2			B13230M63	Board, Neg. Volt. Reg.	1	
3	R1, R2		RCR07302-5S	Resistor 1/4 W 3K	2	
4	R3	Helitrim	89PR10K	Resistor - Var.	1	
5	R4		RCR07102 - 5S	Resistor 1/4W 1K	1	
6	R5		RCR201R0 - 5S	Resistor 1/2W 1 OHM	1	
7	Q1, Q2		2N3906	Transistor	2	
8	U1		LM723CN	14 Pin Dip	1	
9	C1	Sprague	500PF	Ceramic Disc Capacitor	1	
10	C2	Erie	8131-050-651-105M	Capacitor, 50V 1.0µf ±20%	1	
11		Keystone	1502-2	Turrett Terminal	6	
12		Cinch	3-LPS-B	Trans Socket	2	
13		Robinson Nugent	ICN-143-S3	IC Socket 14 Pin	1	
14						
15						

MICROFILMED

DATE 3/1/76 BY HW REV LTR A

BILL OF MATERIAL

NATIONAL RADIO ASTRONOMY OBSERVATORY

☒ ELECTRICAL ☐ MECHANICAL BOM #A13230Z32 REV B DATE 2 JUNE 75 PAGE 1 OF 3

MODULE # L14 NAME CENTRAL LO FILTER DWG #A13230Z33 SUB ASMB PHASE LOCK LOOP P.C. BOARD ASSY DWG #C13230P37

SCHEMATIC DWG #B13230S13 LOCATION _____ QUA/SYSTEM _____ PREPARED BY J. Earnest APPROVED RMA

ITEM #	REF DESIG	MANUFACTURER	MFG PART #	DESCRIPTION	TOTAL QTY	
1		NRAO	A13230Z32	PHASE LOCK LOOP P.C. BOARD ASSY (C13230P37)	—	
2			C13230M69	PHASE LOCK LOOP P.C. BOARD	1	
3			B13230S13	SCHEMATIC	REF	
4		NRAO	B13230AB11	ARTWORK	REF	
5	R18,R19		RCR07101-5S	RESISTOR 1/4W 100 OHMS	2	
6	R20,R17		303	30K	2	
7	R15		510	51 OHMS	1	
8	R16,R21, R33		102	1K	3	
9	R6,R8, R22,R25		333	33K	4	
10	R28,R30		201	200 OHMS	2	
11	R24		470	47 OHMS	1	
12	R29,R26		222	2.2K	2	
13	R10,R13		682	6.8K	2	
14	R11,R12		471	470 OHMS	2	
15	R4,R5, R9		RCR07103-5S	RESISTOR 1/4W 10 K	3	

MICROFILMED

DATE 3/1/76 BY KL REV. LTR A

BILL OF MATERIAL

NATIONAL RADIO ASTRONOMY OBSERVATORY

☒ ELECTRICAL ☐ MECHANICAL BOM #A13230232 REV B DATE 2 JUNE 75 PAGE 2 OF 3

ITEM #	REF DESIG	MANUFACTURER	MFG PART #	DESCRIPTION	TOTAL QTY	
16	R25		RC07473-5S	RESISTOR 1/4W 47K	1	
17	R32		132	1.3K	1	
18	R27		821	820 OHMS	1	
19	R7		751	750 OHMS	1	
20	R31		RC07392-5S	RESISTOR 1/4W 3.9K	1	
21	R3,R14	BOURNS	3339H-1-102	1K RESISTOR, VAR.	2	
22	R1	BOURNS	3339H-1-104	100K RESISTOR, VAR.	1	
23	R2	BOURNS	3339H-1-502	5K RESISTOR, VAR.	1	
24	C3	ERIE	8101-050-651-102M	.001 μf CAPACITOR	1	
25	C2,C4	ERIE	8121-050-651-104M	.1 μf CAPACITOR	2	
26						
27	C5,C7	ERIE	8131-050-651-105M	1.0 μf CAPACITOR	2	
28	C1	MALLORY	SX291	.0091 μf POLYSTYRENE CAPACITOR	1	
29	CR1,CR2		1N914	DIODE	2	
30	S1	ALCO	MTM-106E-PC	SWITCH	1	
31	U1,U3	NAT SEMICOND	LM318H	OP AMP	2	
32	U2	ANALOG DEV	AD7513KH	DUAL F.E.T. SWITCH	1	

MIGRATED
DATE 3/1/76 REV LTR A

BILL OF MATERIAL

NATIONAL RADIO ASTRONOMY OBSERVATORY

☒ ELECTRICAL ☐ MECHANICAL BOM # A13230Z32 REV B DATE 2 JUNE 75 PAGE 3 OF 3

ITEM #	REF DESIG	MANUFACTURER	MFG PART #	DESCRIPTION	TOTAL QUA	
33	Q1		2N3906	TRANSISTOR	1	
34	Q2		2N3904	TRANSISTOR	1	
35		ROBINSON-NUGENT	DP5178-T	SOCKET 8 PIN	2	
36		CINCH	3-LPS-B	SOCKET 3 PIN	2	
37	E1-E12	KEYSTONE	1502-2	TERMINAL-TURRET	12	
38		KEYSTONE	1589-2	STANDOFF	4	
39		ROBINSON-NUGENT	DP51710T-23	SOCKET 10 PIN	1	

MICROFILMED

DATE 3/1/76 BY HW REV LTR A

BILL OF MATERIAL

NATIONAL RADIO ASTRONOMY OBSERVATORY

☒ ELECTRICAL ☐ MECHANICAL BOM # A13230Z39 REV A DATE 4 SEPT 75 PAGE 1 OF 1

MODULE # C-14 NAME CENTRAL LO FILTER DWG # D13230P41 SUB ASMB 1200/1800 PHASE ERROR INDICATOR BOARD ASSY DWG # B13230P46

SCHEMATIC DWG # B13230S18 LOCATION _____ QUA/SYSTEM _____ PREPARED BY HWard APPROVED RWA

ITEM #	REF DESIG	MANUFACTURER	MFG PART #	DESCRIPTION	TOTAL QUA	
1		NRAO	A13230Z39	1200/1800 Φ ERROR INDICATOR BOARD ASSY (B13230P46)	—	
2		NRAO	B13230M93	1200/1800 Φ ERROR INDICATOR DRILL DIAGRAM	1	
3	U1	MONSANTO	MCT-6	OPTO-ISOLATER, DUAL	1	
4	Q1,2	MOTOROLA	2N3906	TRANSISTOR, PNP	2	
5	R3,6		RCR07-101-5S	RESISTOR 1/4W 100 OHMS	2	
6	R2,5		RCR07-222-5S	RESISTOR 1/4W 2.2K	2	
7	R1,4		RCR07-102-5S	RESISTOR 1/4W 1K	2	
8		KEYSTONE	1596-2	STANDOFF	4	
9	E1-E10	KEYSTONE	1502-2	TURRETT TERMINAL	10	
10		CINCH	3LPS-B	SOCKET, TRANSISTOR	2	
11		ROBINSON/NUGENT	ICN-083-S3	IC SOCKET 8 PIN	1	
12		NRAO	B13230S18	SCHEMATIC	REF	
13		NRAO	A13230AB15	ARTWORK	REF	
14						
15						

3/1/76 HW A

7.0 MANUFACTURERS' DATA SHEETS

7.0.1 Solid State Technology

SSC 0222A & 0223A Oscillators (3 pages)

7.0.2 OMNI Spectra

20090 Crystal Diode Detector

7.0.3 Addington Labs

101102660 Circulator

7.0.4 Vectronics Microwave

PD8304-4M Power Divider, 4 way

FREQUENCY (MHz)	POWER (mW)	FREE RUNNING MODEL NUMBER	PHASE LOCKED MODEL NUMBER
750- 850	300	SSC-0101	SSX-0122
850- 980	300	SSC-0102	SSX-0123
980- 1100	250	SSC-0103	SSX-0101
1080- 1220	250	SSC-0104	SSX-0124
1200- 1340	250	SSC-0105	SSX-0102
1300- 1520	250	SSC-0106	SSX-0125
1500- 1720	200	SSC-0107	SSX-0103
1640- 1780	150	SSC-0108	SSX-0126
1720- 1920	150	SSC-0109	SSX-0127
1880- 2080	150	SSC-0111	SSX-0128
2000- 2320	125	SSC-0115	SSX-0104
2320- 2550	50	SSC-0110	SSX-0131
3600- 3900	10*	SSCM-0121	SSX-0121
3600- 4130	10	SSCM-0106	SSX-0106
3850- 4200	10*	SSCM-0107	SSX-0107
4330- 4930	10*	SSCM-0108	SSX-0108
5400- 5900	10	SSCM-0109	SSX-0109
5855- 6445	10*	SSCM-0110	SSX-0110
6400- 6950	10*	SSCM-0111	SSX-0111
6800- 7200	10	SSCM-0112	SSX-0112
7000- 7525	10	SSCM-0113	SSX-0113
7500- 8000	10	SSCM-0114	SSX-0114
7975- 8500	10	SSCM-0115	SSX-0115
10630-11230	10	SSCM-0116	SSX-0116
11200-11770	10	SSCM-0117	SSX-0117
11630-12300	10	SSCM-0118	SSX-0118
12130-12700	10	SSCM-0119	SSX-0119
12630-13230	10	SSCM-0120	SSX-0120
13750-14250	10	SSCM-0122	SSX 0129
16000-16500	10	SSCM-0123	SSX-0130

*See option H

These products represent state of the art performance in high stability tuneable sources. They are typically realized as follows. Models SSC-0100 are Bi-Polar transistor oscillators wherein the frequency determining element is both lumped and distributed in nature. The consequences of this are excellent long and short term frequency stability. Models SSCM-0100 consist of a suitable Model SSC-0100 followed by a harmonic generator. Models SSX-0100 are either of the above integrated with a phase lock system. The loop phase comparator is of a sampling nature, and the reference can either be included or external. All units can be mechanically tuned over the full bandwidth, and as an option can be provided with AFC capability of typically ±0.1% bandwidth. AFC frequency range is typically DC - 10MHz, except for Models SSX-0100, where it is 200 KHz - 10 MHz.

PERFORMANCE DATA

Typical Operating Parameters for SSX series			
	Input voltage	Load	Temp
Freq	——	——	See options
Power	**	2 DB/1.5:1	0.01 DB/°C

Typical Operating Parameters for SSC & SSCM series			
	Input voltage	Load	Temp
Freq	.02% / v.	1% / 1.5:1	.001% /°C
Power	**	2 DB/1.5:1	0.01 DB/°C

**Power leveling via input voltage change not advised

CRYSTAL DIODE DETECTOR
MODEL 20090

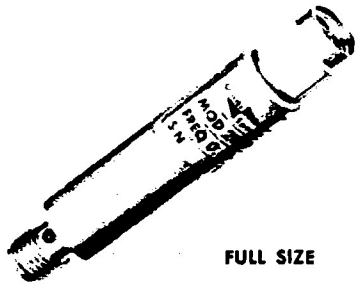

FULL SIZE

OSM Model 20090 Miniature Coaxial Crystal Detectors are designed for the detection of CW, square wave, pulse and frequency-modulated microwave signals. They may be used to monitor power level or modulation wave shape; as constant level or sensitive null indicator; or as general purpose indicator of microwave signals.
Model 20090 is an ultra-compact, untuned detector which mates with all OSM miniature connectors. These units are supplied with replaceable crystals. The untuned mount allows operation over a very wide frequency range without any adjustment. Video output capacitance is less than 15 picofarads. A 50 ohm dc return path for the detector current is integral with the mount. The output is negative with respect to the housing. The units are supplied with an Omni Spectra part number 5447-4 diode.

ELECTRICAL SPECIFICATIONS

Frequency Range:	10 MHz - 12.4 GHz
Sensitivity:	300 mV/mW Typical
Output Capacitance:	15 Picofarads Maximum
Output Polarity:	Negative
Temperature Range:	- 30°C to + 70°C

Usable to 18GHz

MECHANICAL SPECIFICATIONS

Weight:	0.6 ounces (17.0 g)
Overall Length:	2.0 inches (50.8 mm)
Diameter:	3/8 inches (9.5 mm)
Connectors:	Input - OSM Plug Output - OSM Jack
Finish:	Gold

Omni Spectra, Inc.
24600 Hallwood Ct. • Farmington, Michigan 48024 • Tel. (313) 477-1234 • TWX 810—242-1463

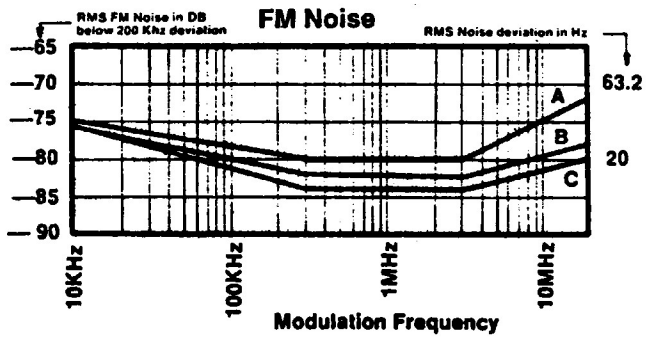

Maximum permissible demodulated FM noise in any 3 KHz window from 10 KHz to 10 MHz

Curve A — Oscillators at 11630 and above
Curve B — Oscillators between 6800 MHz and 11629 MHz
Curve C — Oscillators below 6800 MHz

Note: These noise limits apply over the ambient temperature range of 10°C to 50°C. Outside this range, but in the range of —30°C to 60°C, the limits are relaxed 2 DB.

Power vs. Frequency

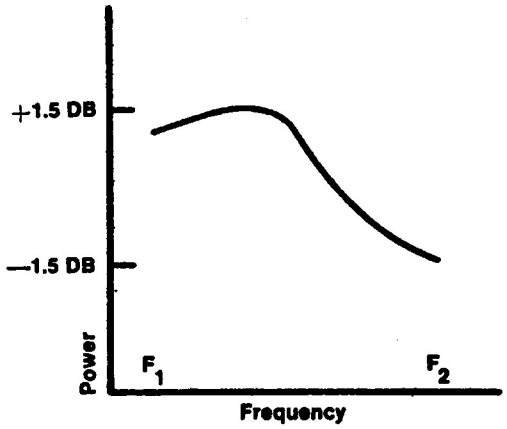

Harmonic Rejection: –30 DBC for freq.<3GHz
–50 DBC for freq.>3 GHz

Discreet Spurious Rejection: —60 DBC

AM Noise: —100 DBC/KHz

Input Power: —20 VDC @ 350 mA Typ For SSX series
—20 VDC @ 125 MA for SSC & SSCM series

Operating Temperature: —30 to 60°C Typ

Frequency vs. Voltage
(For AFC or Modulation)

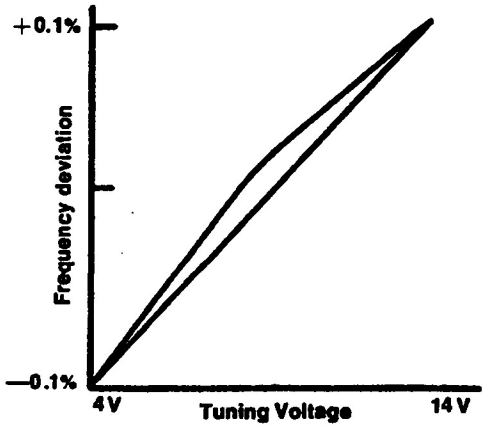

AVAILABLE OPTIONS

- **A** Separate modulation input with coax connector.
- **B** External reference oscillator input less reference oscillator.
- **C** ±0.005% Stability crystal
- **D** ±0.002% Stability crystal
- **E** ±0.0005% Stability crystal and internal crystal oven.
- **F** Internal crystal oven less crystal (requires crystal to SST specs).
- **H** 50 mW MIN., 25°C, 50 OHM Load
- **LLA** Lock limit alarm
- **W** Waveguide output

SOLID STATE TECHNOLOGY

3650 Charles Street
Santa Clara, California
95050 (408) 247-8620

March 26, 1976

Mr. Bud Beazell
NRAO
2015 Ivy Road
Charlottesville, VA 22903

Re: Quotation #2752

NRAO CAVITY OSC SPECS

1. SSC-0222(A)

Frequency:	1200 MHz
Power Out:	250 mW
Mod Rate:	DC-10 MHz
AFC Voltage:	-4 to -10 VDC
Mod Sense:	400 to 600 KHz/V AT-7V
AFC & RF Conn:	SMA(f)
AFC Deviation:	± 1.2 MHz min.

2. SSC-0223(A)

Spec's as above except:

Frequency:	1800 MHz
AFC Deviation:	± 1.8 MHz min.

Charles M. Chaffer
SST

3 Port Tee Circulators

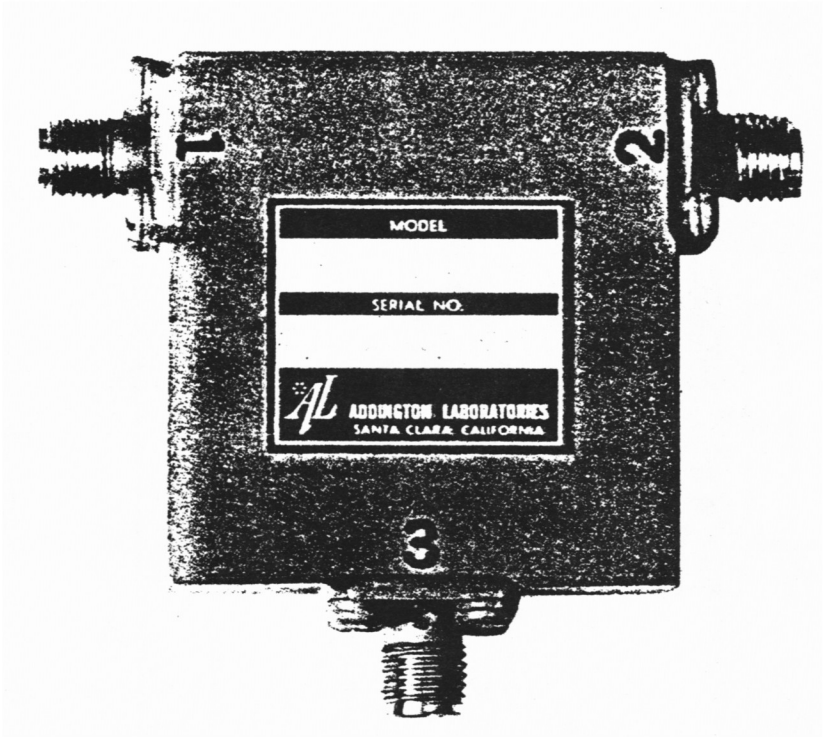

Circulators listed can also be furnished with any of the following options:

- Special mounting
- Choice of connectors
- High power-peak or average
- Extreme environment
- Y or customized configurations
- Cryogenic temperatures
- Magnetic shielding

Before specifying non-standard devices, it may be helpful to review the notes at the beginning of the catalog. For quick and competent assistance in design or proposal preparation, contact Addington Laboratories' engineering department either directly or through your local representative.

Tee Circulators (Octave Band)

FREQUENCY (GHz) OPERATING	ISOLATION (dB) 2-1	INS. LOSS (dB) 1-2	VSWR (max.) All Ports	SIZE IN INCHES (Approx.) L H W	WEIGHT (ounces) Approx.	MODEL NUMBER (Specify on order)	CONNECTOR (female) All Ports
.500-1.00	17	1.0	1.35	5¾ x 1¼ x 5⅝	50	100100001	N
1.00-2.00	20	0.4	1.25	3 13/32 x 1 x 3½	16	100100004	N
1.20-2.40	20	0.4	1.25	3 13/32 x 1 x 3½	16	100100007	N
2.00-4.00	20	0.4	1.25	1 25/32 x 1 x 2 3/32	10	100100012	3MM
2.60-5.20	20	0.4	1.25	1⅝ x 1 x 1 27/32	8	100100015	3MM
3.00-6.00	20	0.4	1.25	1 7/16 x ¾ x 1½	5	100100018	3MM
4.00-8.00	20	0.4	1.25	1 5/32 x ⅝ x 1 5/16	3	100100021	3MM
5.00-10.0	20	0.4	1.25	1 x ⅝ x 1 3/16	3	100100024	3MM
8.00-16.0	18	0.5	1.30	⅝ x ⅝ x 13/16	1	100100173	3MM

Sizes and weights given are for "T" configuration. "Y" configuration available on request.

Specify Your Own Band

(Bandwidths to 35% with f_0 in the ranges noted)

FREQUENCY (GHz) SPECIFY f_0	ISOLATION (dB) 2-1	INS. LOSS (dB) 1-2	VSWR (max.) All Ports	SIZE IN INCHES (Approx.) L H W	WEIGHT (ounces) Approx.	MODEL NUMBER (See footnote)	CONNECTOR (female) All Ports
.250-.400	20	0.4	1.25	4 19/32 x 1 x 4 11/16	30	1001xxxxx	N
.400-.600	20	0.4	1.25	2½ x 1 x 2½	16	1001xxxxx	N
.600-.900	20	0.4	1.25	2 3/16 x 1 x 2⅜	12	1001xxxxx	N
.900-1.40	20	0.4	1.25	1 17/32 x 1 x 1 17/32	10	1001xxxxx	3MM
1.40-2.00	20	0.4	1.25	2¼ x 1 x 2⅜	12	1001xxxxx	3MM
2.00-3.50	20	0.4	1.25	1 13/16 x 1 x 1 13/16	10	1001xxxxx	3MM
3.50-5.00	20	0.4	1.25	1½ x 1 x 1¾	7	1001xxxxx	3MM
5.00-8.00	20	0.4	1.25	1⅛ x ⅝ x 1⅛	4	1001xxxxx	3MM
8.00-12.0	20	0.4	1.25	15/16 x ⅝ x 1 3/32	2	1001xxxxx	3MM
12.0-18.0	18	0.5	1.30	11/16 x ⅝ x 27/32	1	1001xxxxx	3MM

Balance of Model No. will be supplied by factory at time of order.

BROADBAND ISOLATED POWER DIVIDERS
MICROSTRIPLINE

These Isolated Power Dividers incorporate two-section impedance transformers for broadband performance, and thin-film chip resistors for high isolation and good power handling capacity. The units are available as substrates with chrome/copper/gold conductor patterns for solder-tab connection to adjacent microstrip circuits, or packaged in a metal housing with type SMA connectors. For phase-coherent signals, these units can be used as isolated power combiners with identical performance. For non-coherent signals, the loss of the two-way unit will increase by 3 dB when used as a combiner.

Frequency GHz	VSWR Input	VSWR Output	Size 2 - Way	Size 4 - Way	Ins. Loss 2 - Way	Model No. 2 - Way	Price 2 - Way
0.8 - 2.0	1.35	1.20	1 x 2	2 x 2	0.3 dB	PD8304-2	$ 85.-
1.0 - 2.5	1.35	1.20	1 x 1.75	2 x 2	0.3 dB	PD8305-2	$ 85.-
1.5 - 3.75	1.35	1.25	1 x 1.5	2 x 1.75	0.4 dB	PD8306-2	$ 90.-
2.0 - 5.4	1.40	1.25	1 x 1	2 x 1	0.5 dB	PD8307-2	$ 90.-
3.0 - 7.8	1.45	1.30	1 x 1	2 x 1	0.5 dB	PD8308-2	$ 90.-

For the corresponding 4-way models, use suffix -4 with model number. Additional price is $ 35.- for the 4-way version.

Amplitude Balance	± 0.3 dB max.
Phase Balance	± 3° max.
Isolation	20 dB min., 30 dB typ.
Insertion Loss, 4-Way	2 x loss of 2-Way
Material	99.5 % Alumina
Conductors	Chrome/Copper/Gold
Input Power Capacity	
Any Load Impedance	2 W CW max. (2-way)
	4 W CW max. (4-way)
For 2:1 max. Mismatch	10 W CW max. (2-way)
	20 W CW max. (4-way)

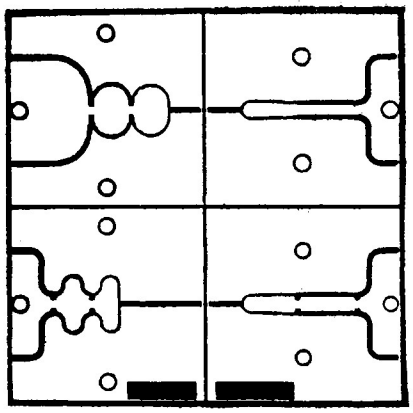

For the packaged configuration with type SMA (female) connectors, use suffix " M " with model number. Additional price is $ 50.- for the 2-way models, $ 75. for the 4-way units.

Other frequency ranges, bandwidths and connector configurations as well as 8-way dividers are available on special order.

VECTRONICS MICROWAVE CORPORATION

276 LINCOLN BOULEVARD • MIDDLESEX, NEW JERSEY 08846 • (201) 356-2377

New Brunswick FTS
201 846 4500

Data Sheet PD8300, 6/71

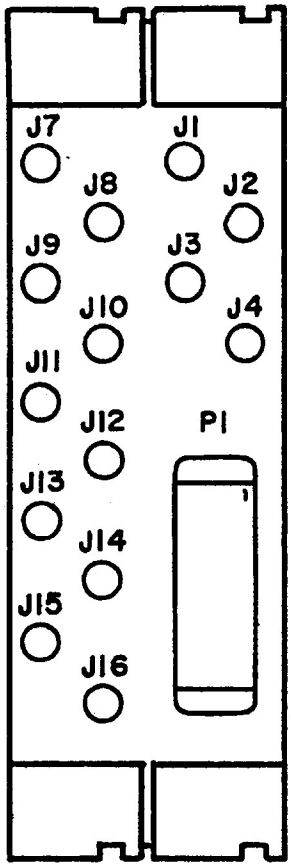

DOUBLE WIDE MODULE
(REAR VIEW)

CONN	FUNCTION
J1	LO 1.2+1.8 INPUT
J2	
J3	
J4	
J7	
J8	
J9	5MHZ INPUT
J10	
J11	
J12	
J13	1.2 GHZ OUT
J14	1.8GHZ OUT
J15	
J16	

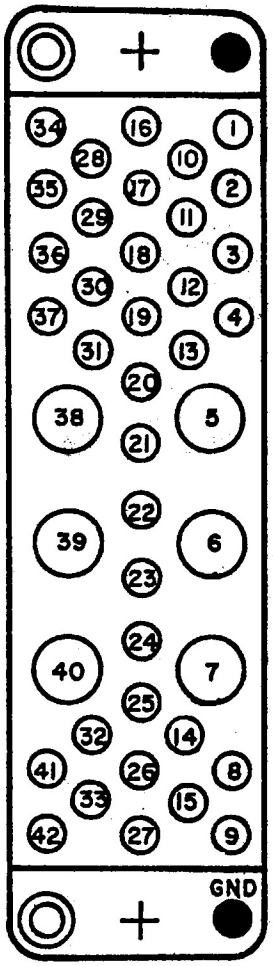

P1 (REAR VIEW)

P1

PIN	FUNCTION	WIRE COLOR	PIN	FUNCTION	WIRE COLOR
1			22	DATA DET. LEVEL	
2			23		
3			24		
4			25		
5	DATA OUT		26		
6			27		
7	5MHZ ØERROR		28	−28VDC	GREEN
8			29	+28VDC	GREY
9			30		
10	+5VDC	ORANGE	31		
11	−5VDC	BROWN	32		
12			33		
13			34	PWR. GROUND	BLACK
14			35		
15			36		
16	+15VDC	RED	37		
17	−15VDC	YELLOW	38		
18			39		
19			40		
20			41		
21	5MHZ DET. LEVEL		42	HIGH QUAL. GROUND	

L9 LO RECEIVER

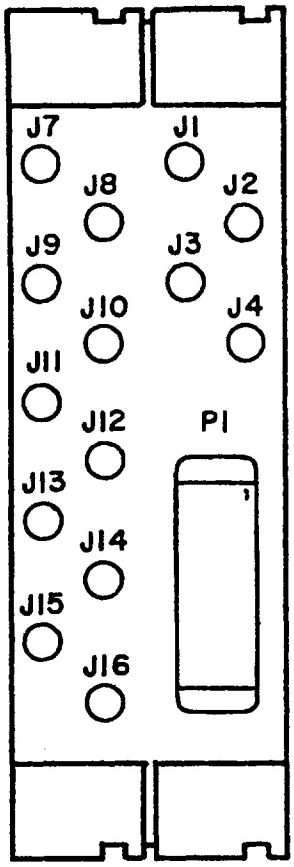

DOUBLE WIDE MODULE
(REAR VIEW)

CONN	FUNCTION
J1	1.2GHZ OUT
J2	1.86HZ INPUT
J3	1.2GHZ INPUT
J4	
J7	600MHZ INPUT
J8	
J9	
J10	
J11	
J12	
J13	
J14	
J15	1.86HZ OUT
J16	

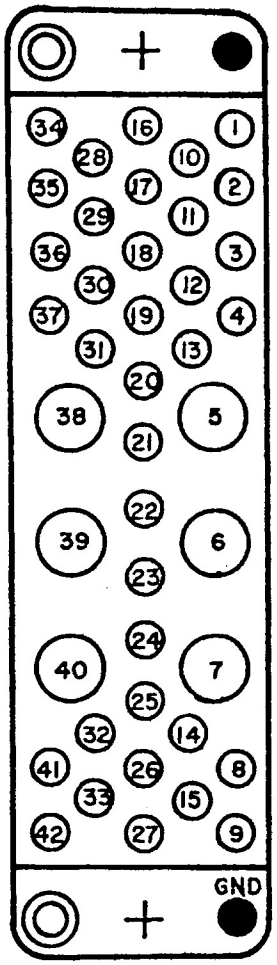

P1 (REAR VIEW)

P1

PIN	FUNCTION	WIRE COLOR	PIN	FUNCTION	WIRE COLOR
1	1.86HZ LOOP % CONT.		22	1.2 GHZ FREQ ERROR	
2			23	1.2 GHZ LEVEL MON	
3	1.2GHZ LOOP% CONT.		24	1.8 6HZ LEVEL MON	
4			25		
5			26		
6			27		
7	600 MHZ Ø ERROR		28	−28VDC	GREEN
8	1.2 GHZ UNLOCK IND.		29	+28VDC	GREY
9	1.8 6HZ UNLOCK IND.		30	1.86HZ Ø ERROR	
10	+5VDC	ORANGE	31	1.2GHZ Ø ERROR	
11	−5VDC	BROWN	32		
12			33		
13			34	PWR. GROUND	BLACK
14			35		
15			36		
16	+15VDC	RED	37		
17	−15VDC	YELLOW	38		
18			39		
19			40		
20			41		
21	1.86HZ FREQ ERROR		42	HIGH QUAL. GROUND	

L19 CENTRAL LO FILTER

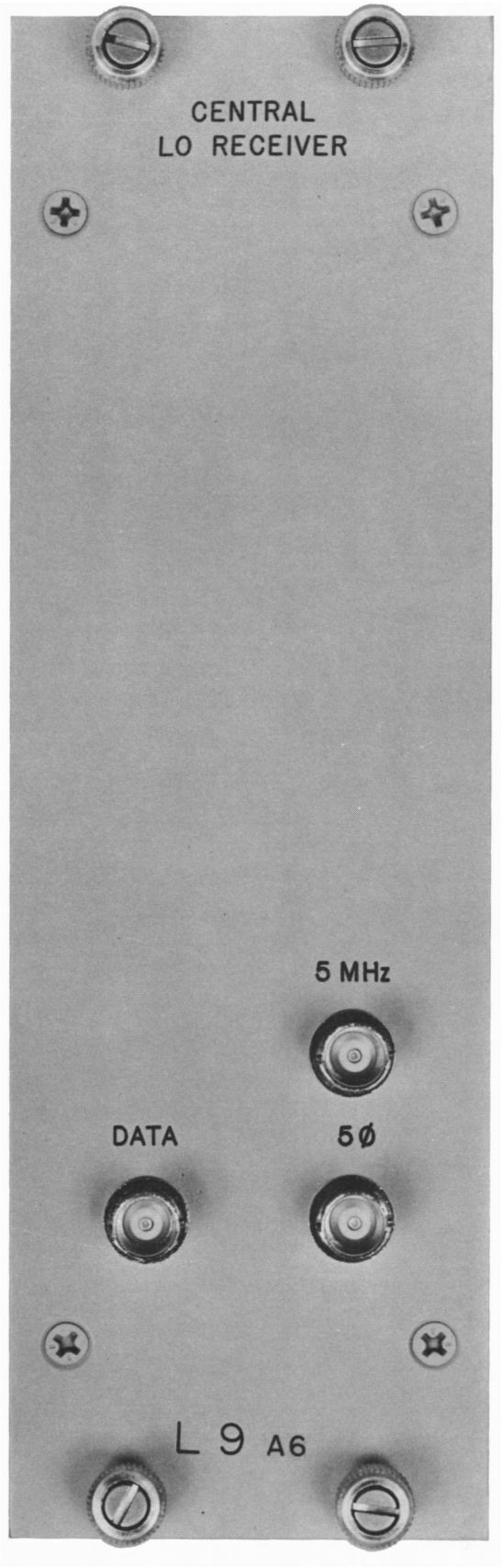

FIGURE 1 L9 FRONT VIEW

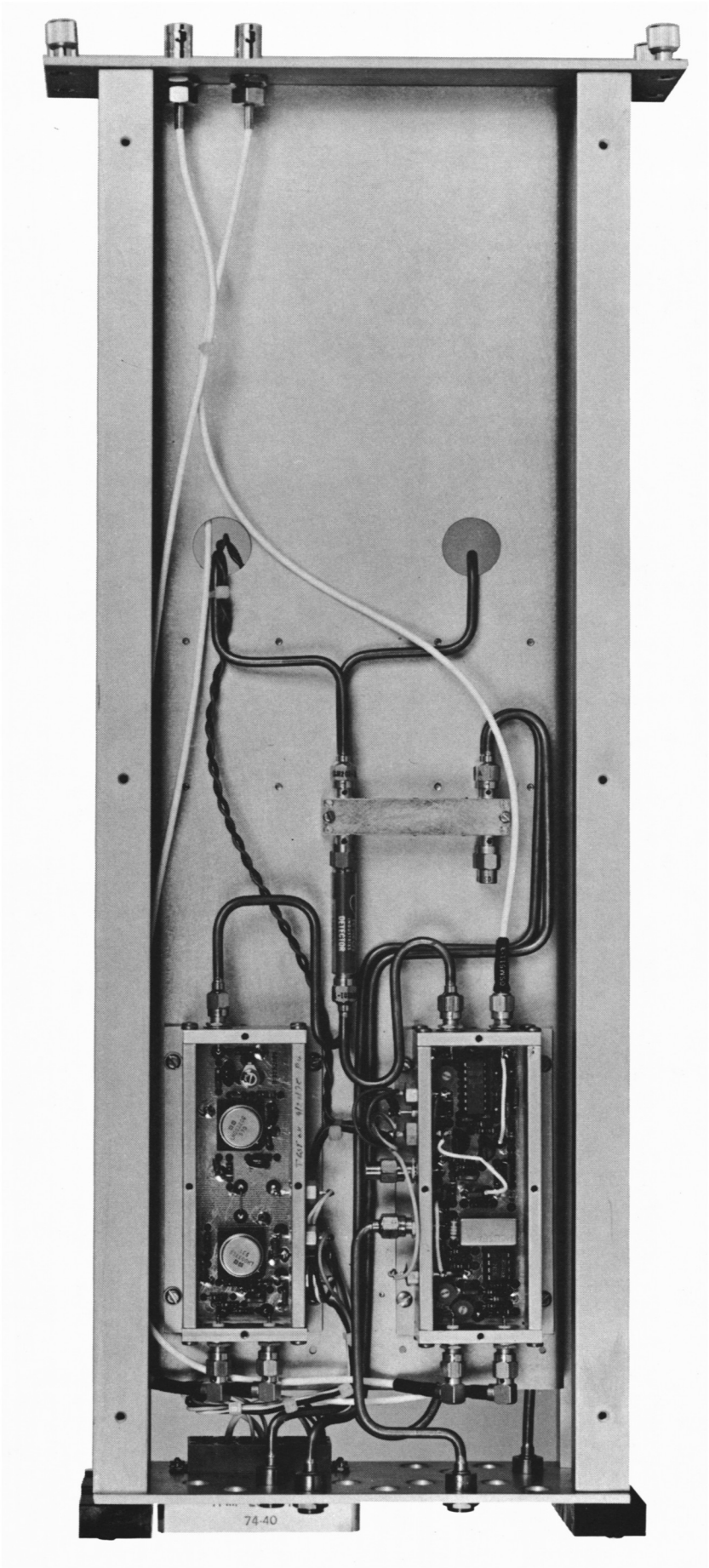

FIGURE 2 L9 RIGHT SIDE VIEW

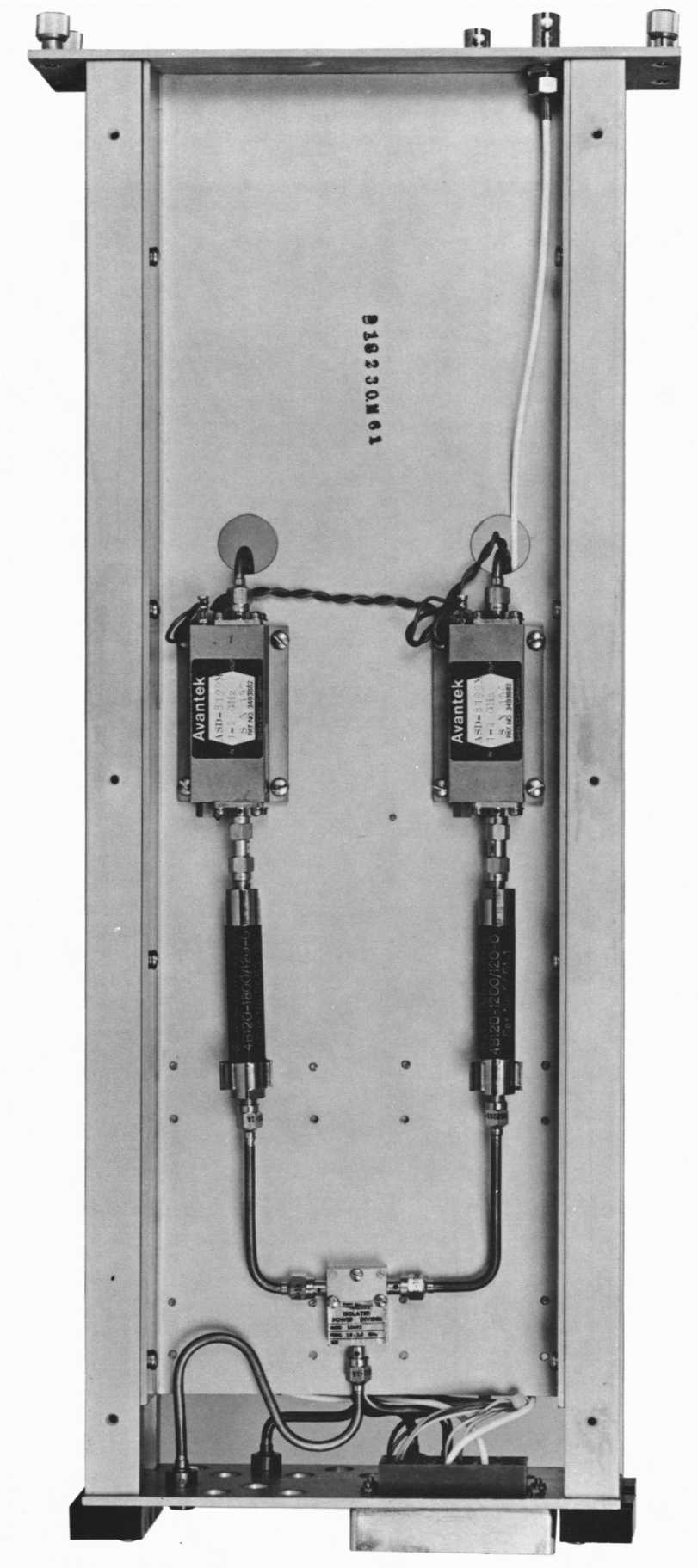

FIGURE 3 L9 LEFT SIDE VIEW

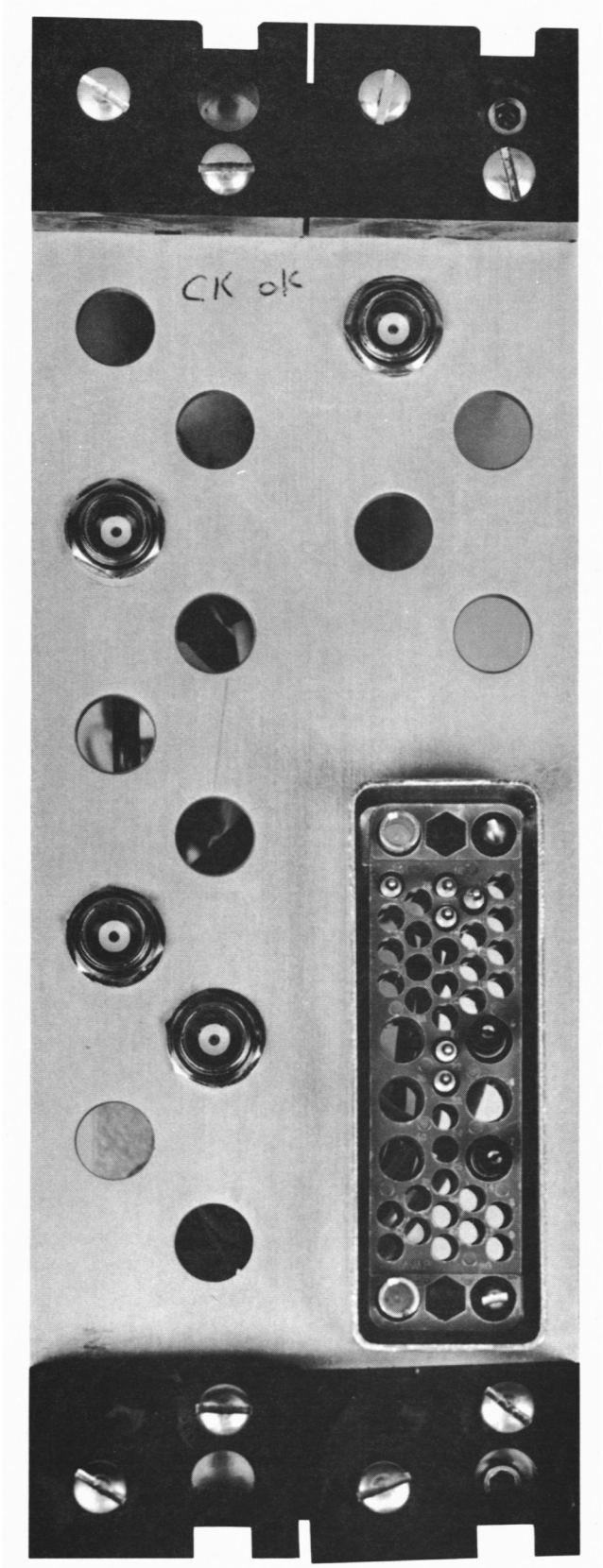

FIGURE 4 L9 MODULE CONNECTORS

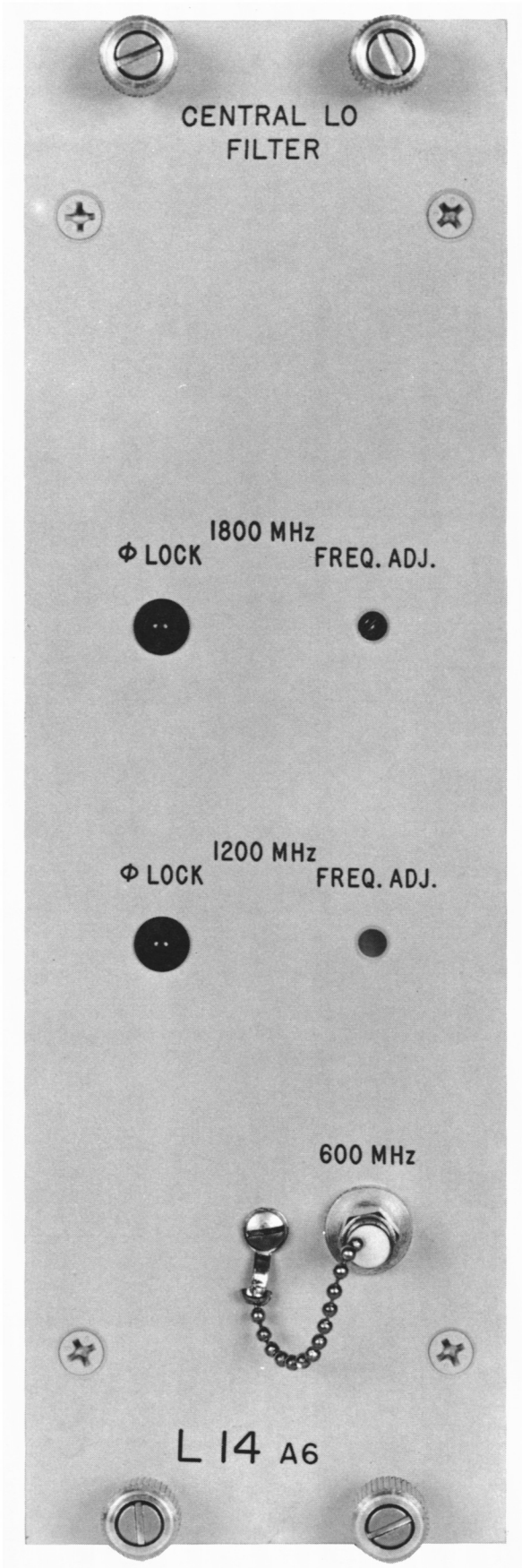

FIGURE 5 L14 FRONT VIEW

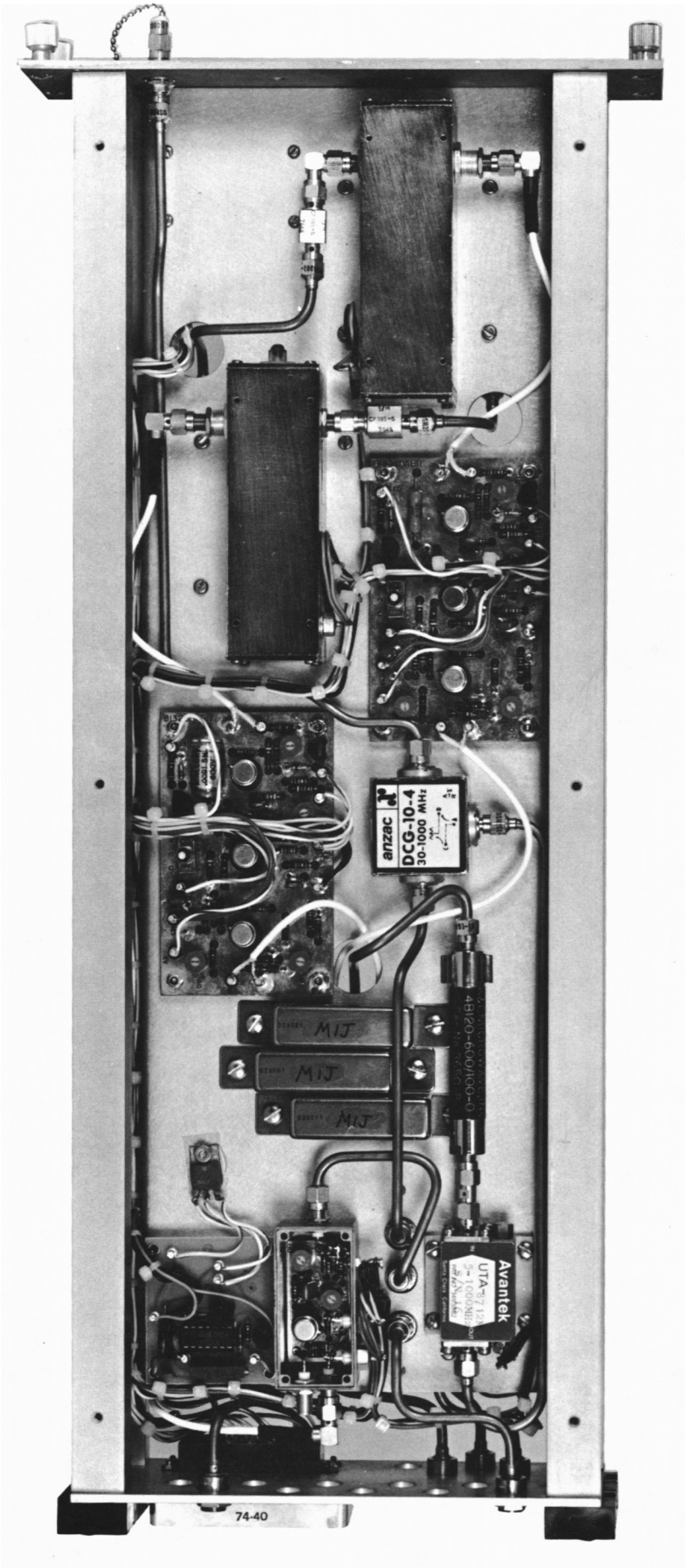

FIGURE 6 L14 RIGHT SIDE VIEW

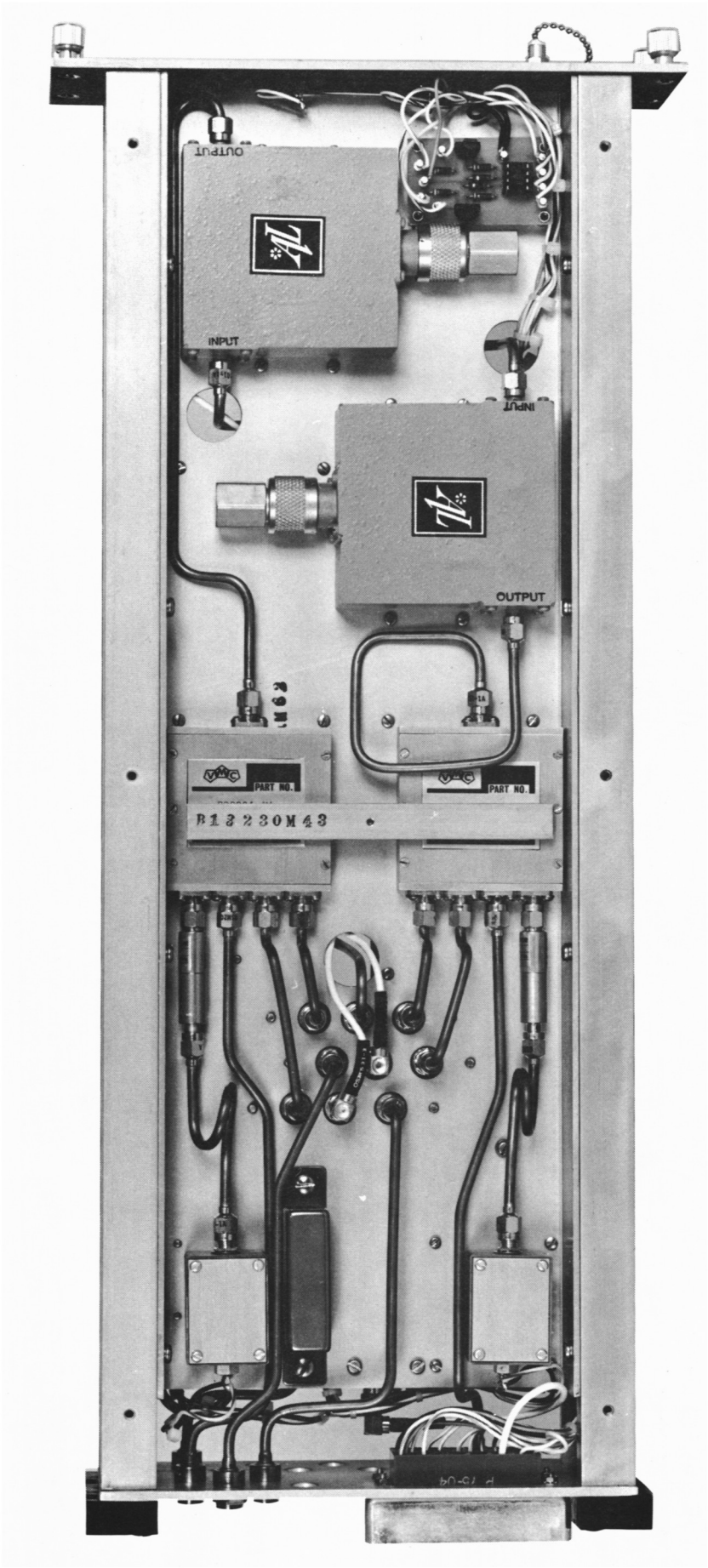

FIGURE 7 L14 LEFT SIDE VIEW

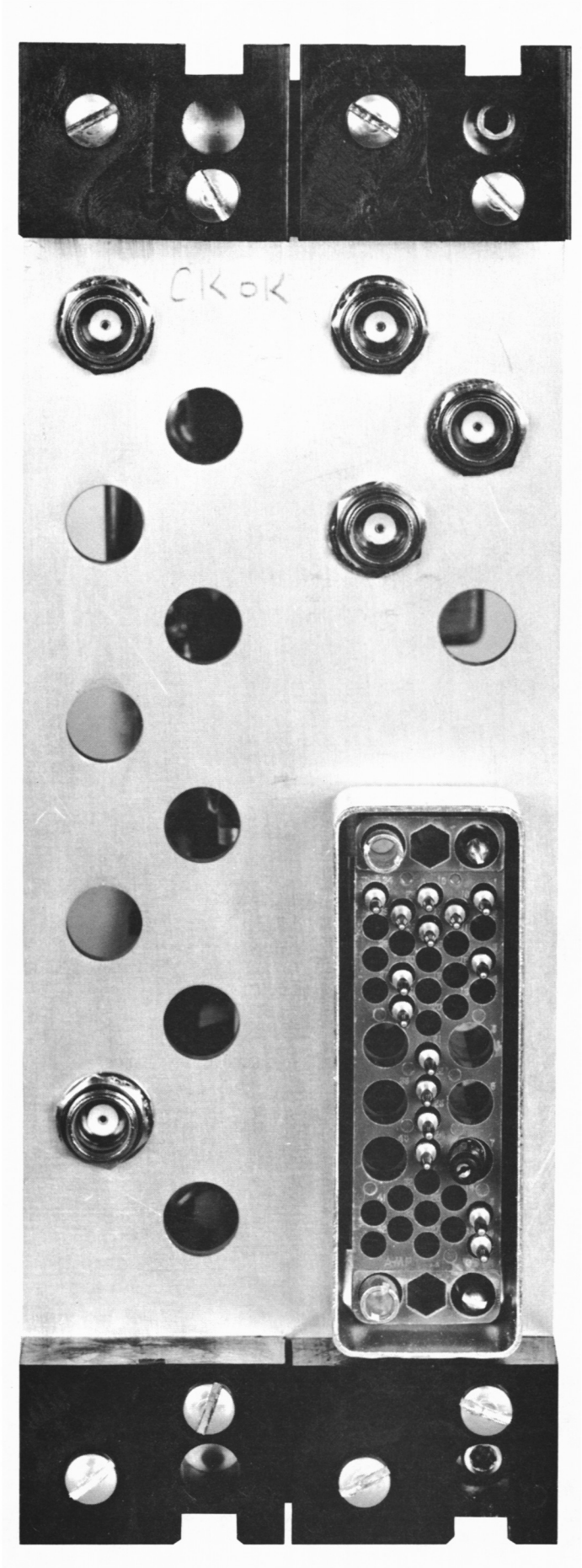

FIGURE 8 L14 MODULE CONNECTORS