VLA TECHNICAL REPORT #26

MODULE L12

L12 OFFSET MASTER

HARRY BEAZELL

September 1976

TABLE OF CONTENTS

2.0 FUNCTIONAL DESCRIPTION

The L12 Module provides control circuits to phase lock an additional L_1, L_2 module at 600 MHz +19.2 Hz and a phase locked 5 MHz +19.2 Hz oscillator for distribution to all central station L14 and L9 modules.

3.0 DETAILED CIRCUIT DESCRIPTION

3.0.1 600 MHz +19.2 Hz

The short term stability requirements for the 600 MHz +19.2 Hz dictate a VCXO with characteristics equal to those of the reference 600 MHz. To this end, an additional L_1, L_2 module is used. The HP 10545A H37 5 MHz oscillator in the L1 module is mechanically offset to 5 MHz + $\frac{19.2}{120}$ Hz, which is well within its trim range. A +7 dBm level at J_4 is mixed with a 0 dBm level of the 600 MHz master at J_3, by a MIJ mixer. The resulting 19.2 Hz beat is low pass filtered by R_6 and C_3. A CMP01 is used as a zero crossing detector. Its output is differentiated by R_8 and C_4 and clipped and invented by $\overline{Q_2}$. The CRT/H signal ($P_1 7$) is differentiated and clipped by Q_1. These two outputs provide the Set/Reset inputs to a CD4001 latch, U_4.

The Q & $\overline{Q}$ outputs of the latch are divided by R_{10}, R_{11} and R_{13}, R_{12} to limit the maximum excursion to +10V to the inputs of the ADP501 balanced integrator, U_8. The sensitivity of the latch as a phase comparator is 20V/360°. The gain of the HP 10543A H37 is between .02 and .04 Hz/V. This gives a loop gain, Kv = 48 to 96 Hz. The values used for R_{14}, R_{17} and C_{12}, give a loop of about 5 rad. bandwidth and a damping factor of about 5. Resistor R_{18} and the Zener diodes CR_1 and CR_2 prevent oscillation of the ADP501 due to cable capacity and limit the excursion of the VCXO. Pull in for errors within the loop bandwidth of 5 radians is less than a second. For errors of several Hz, pull in time may be quite long.

3.0.2 5 MHz +19.2 Hz

The 5 MHz offset is accomplished with only a slight difference in circuitry. The 5 MHz VCXO is board mounted in the L12 module. A DM8830N, U_{31} dual differential line driver is used as an output buffer and as a differential driver to a SRA-1 mixer. This mixer is used in a differential mode to drive the CMP01 zero crossing detector. The remainder of the circuit is similar to the 600 MHz.

4.0 TEST AND ADJUSTMENT

4.0.1 Initial Adjustment

4.0.1.1 600 +19.2

Plug in the L_1 and L_2 modules, if cold, allow 24 hours to stabilize. Place L12 on an extender. Set output switch to ground (Pos. 2). Set input monitor switch to view 600 MHz Ø error. Adjust L1 mechanical frequency to give a 19.2 Hz frequency. Sync scope to T/H or compare with T/H etc. Change switch to Pos. 1 (loop closed). Change monitor switch to 600 frequency error. The DC level should be set by adjusting L_1 to within $\pm$.5VDC. A 19.2 Hz sawtooth of about .1V peak-to-peak will be evident.

4.0.1.2 5 MHz +19.2

The 5 MHz oscillator requires about one hour to stabilize (a day is better). The adjustment is made in the same way as the 600 MHz. The 5 frequency error output sawtooth is about 1V peak-to-peak.

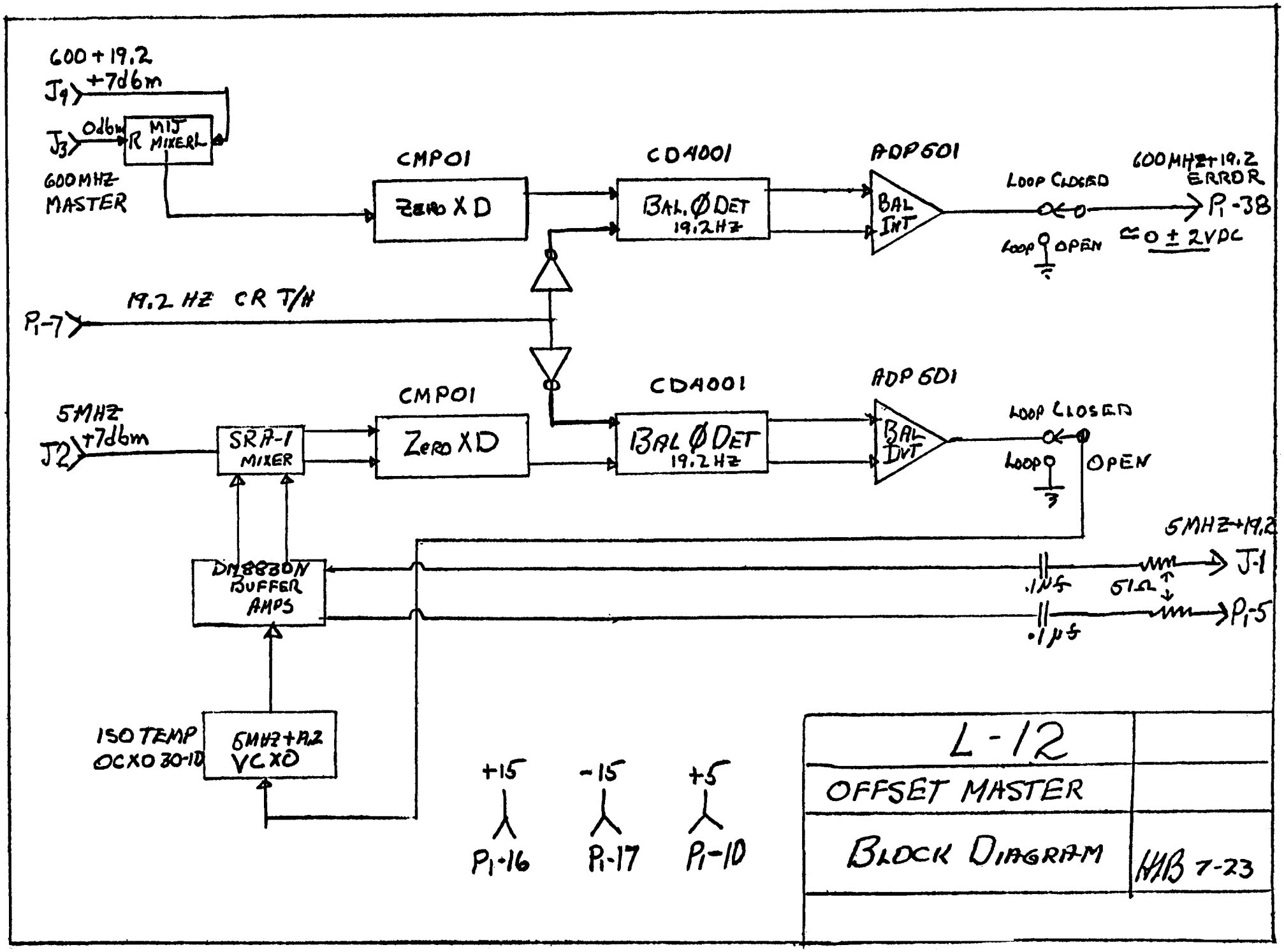
600 + 19.2
J9 +7dbm
J3 0dbm
R MIX MIXER L
600MHZ MASTER
CMP01
ZERO XD
CD4001
BAL. Ø DET 19.2HZ
ADP601
BAL INT
LOOP CLOSED
LOOP OPEN
600MHZ+19.2 ERROR
P1-38
≃0 ± 2VDC
P1-7
19.2 HZ CR T/H
5MHZ +7dbm
J2
SRA-1 MIXER
CMP01
ZERO XD
CD4001
BAL Ø DET 19.2HZ
ADP601
BAL INT
LOOP CLOSED
LOOP
OPEN
5MHZ+19.2
J-1
.1µf
51Ω
P1-5
.1µf
DIBBON BUFFER AMPS
ISO TEMP OCXO 30-10
5MHZ+19.2 VCXO
+15
P1-16
-15
P1-17
+5
P1-10
L-12
OFFSET MASTER
BLOCK DIAGRAM
HAB 7-23

5.0.2 Module Schematic

Copy of schematic is in the envelope in the back of this report.

monoCMP-01

FAST PRECISION COMPARATOR SERIES

FEATURES

■ Fast Response Time	90 ns typ., 150 ns max.
■ High Input Slew Rate	±110 V/μS
■ Low Offset Voltage	0.3 mV typ., 0.8 mV max.
■ Low Offset Current	4 nA typ., 25 nA max.
■ Low Offset Drift	1.0 μV/°C, 30 pA/°C
■ High Output Current	50 mA min.
■ Standard Power Supplies	±5V to ±18V
■ Guaranteed Operation from Single +5V Supply	
■ No Pull-up Resistor Required for TTL Drive	
■ Wired OR Capability	
■ Fits 111, 106, 710 Sockets	
■ Easy Offset Nulling	Single 2kΩ Pot
■ Easy to Use	Free from Oscillations

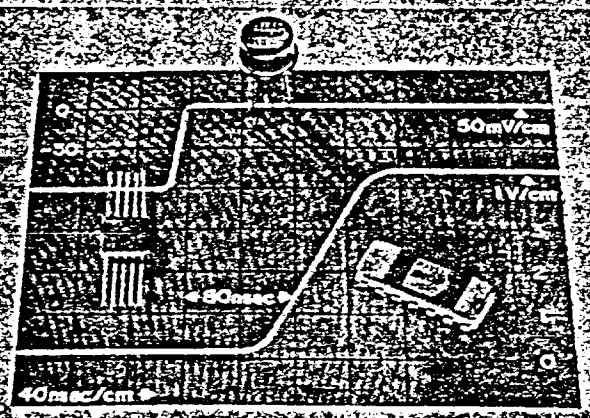

RESPONSE TIME WITH 5mV OVERDRIVE

GENERAL DESCRIPTION

The monoCMP-01 is a monolithic Fast Precision Voltage Comparator using an advanced compatible NPN-Schottky Barrier Diode process. It features fast response time to both large and small input signals, while maintaining excellent input characteristics. The monoCMP-01 is capable of operating over a wide range of supply voltages, including single 5 volt supply operation. The large output current sinking and high output voltage capability assure good application flexibility, while the combination of fast response, high accuracy, and freedom from oscillation assure performance in precision level detectors and 12 and 13 bit A/D converters. The monoCMP-01 is pin compatible to earlier 111, 106, and 710 types. For applications requiring lower input offset and bias currents, refer to monoCMP-02 data sheet.

SIMPLIFIED SCHEMATIC

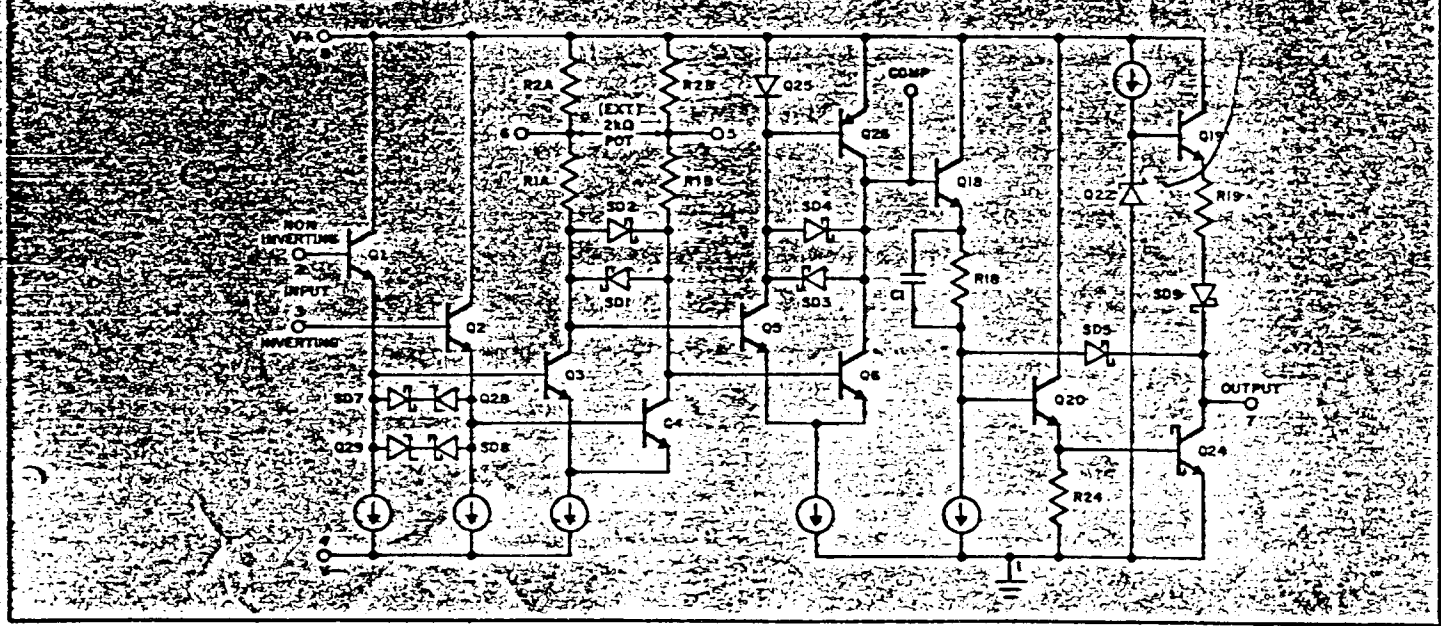

All PRECISION MONOLITHICS products are guaranteed to meet or exceed published specifications.

PRECISION MONOLITHICS INCORPORATED

ABSOLUTE MAXIMUM RATINGS

Total Supply Voltage, V+ to V-	35V
Output to Ground	-5V to +32V
Output to Negative Supply Voltage	50V
Ground to Negative Supply Voltage	30V
Positive Supply Voltage to Ground	30V
Positive Supply Voltage to Offset Null	0 to 2V
Power Dissipation (See Note)	500 mW
Differential Input Voltage	±11V
Input Voltage (V_s = ±15V)	±15V
Output Sink Current (Continuous Operation)	75 mA
Operating Temperature Range —	
monoCMP-01	-55 to +125°C
monoCMP-01E, -01C	0 to 70°C
Storage Temperature Range	-65 to 150°C
Lead Temperature (Soldering, 60 Sec)	300°C
Output Short Circuit Duration — to ground	Indefinite
to V+	1 min.

Note: Maximum package power dissipation vs. ambient temperature

Package Type	Maximum Ambient Temperature for Rating	Derate Above Maximum Ambient Temperature
TO-99 (J)	80°C	7.1 mW/°C
Dual-in-Line (Y)	100°C	10.0 mW/°C
Flat (L)	62°C	5.7 mW/°C

PIN CONNECTIONS (Top View)

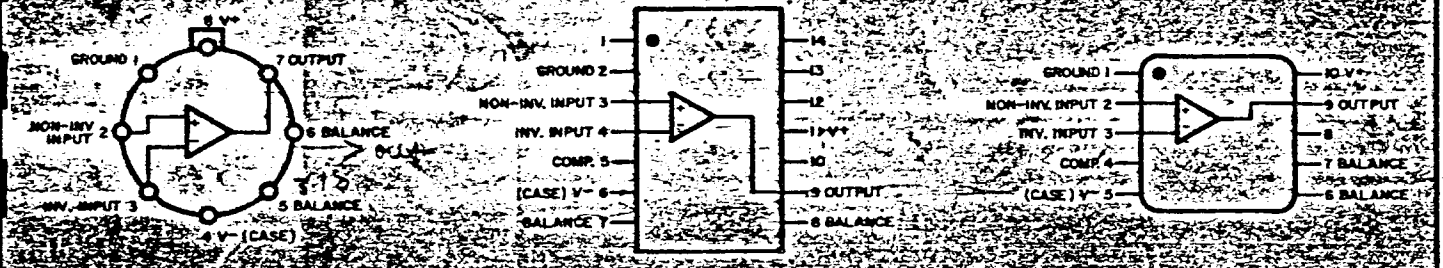

TO-99 (J-Suffix)
ORDER: monoCMP-01J
monoCMP-01EJ
monoCMP-01CJ

14 PIN DIP (Y-Suffix)
ORDER: monoCMP-01Y
monoCMP-01EY
monoCMP-01CY

10 PIN FLATPACK (L-Suffix)
SPECIAL ORDER ONLY

PACKAGE DIMENSIONS

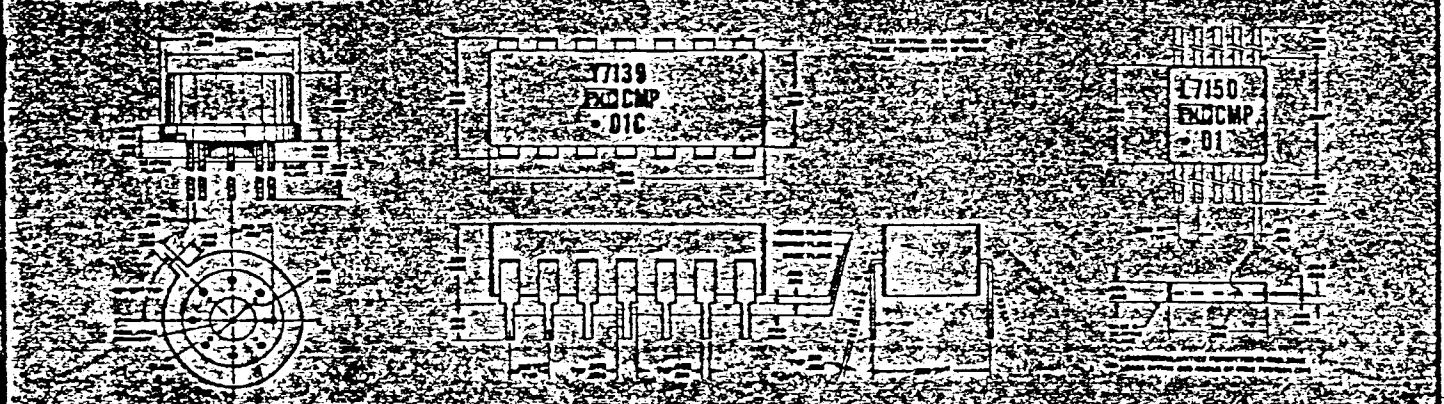

TO-99 (J)
14 PIN CERAMIC DIP (Y)
10 PIN METAL-CERAMIC FLATPACK

Digital Integrated Circuits

Monolithic Silicon

CD4000A, CD4001A CD4002A, CD4025A

Types

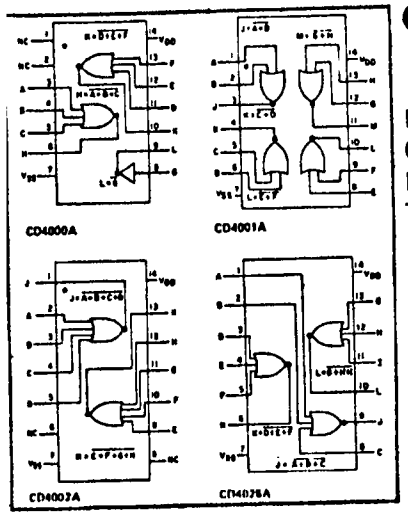

COS/MOS NOR Gates (Positive Logic)

Dual 3 Input plus Inverter	CD4000AD, CD4000AE, CD4000AK
Quad 2 Input	CD4001AD, CD4001AE, CD4001AK
Dual 4 Input	CD4002AD, CD4002AE, CD4002AK
Triple 3 Input	CD4025AD, CD4025AE, CD4025AK

Special Features

- Medium speed operation..... $t_{PHL} = t_{PLH} = 25$ ns (typ.) at $C_L = 15$ pF
- Low "high"- and "low"-level output impedance..... 500Ω and 200Ω (typ), respectively at $V_{DD} - V_{SS} = 10$ V

The combination of these devices and the RCA NAND positive logic gate types CD4011A, CD4012A, and CD4023A can account for appreciable package-count savings in various logic function configurations.

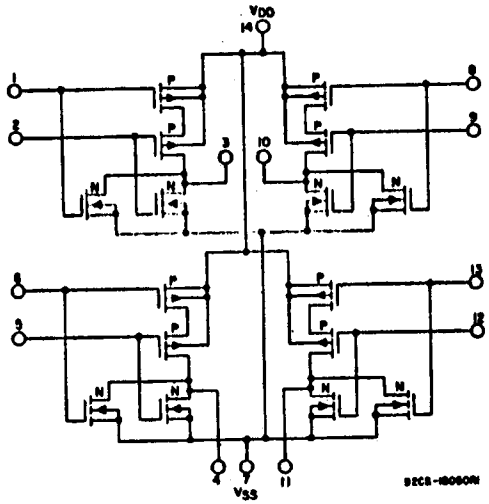

Fig. 1.2—Schematic diagram for type CD4001A.

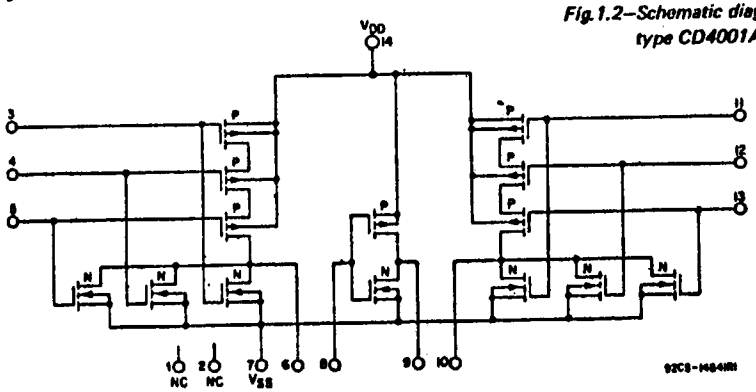

Fig. 1.1—Schematic diagram for type CD4000A.

For maximum ratings, see page 20.

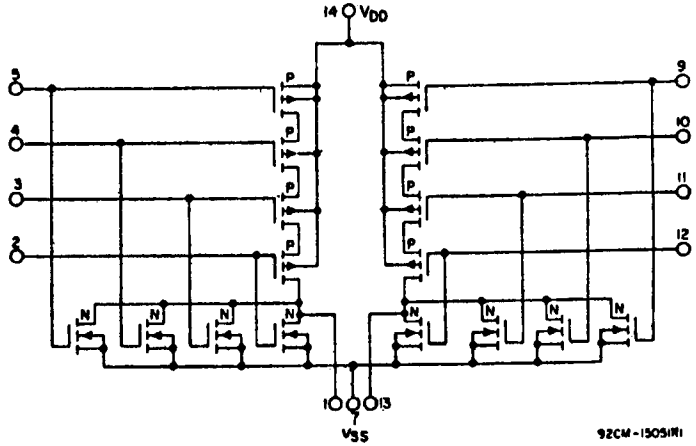

Fig. 1.3—Schematic diagram for type CD4002A.

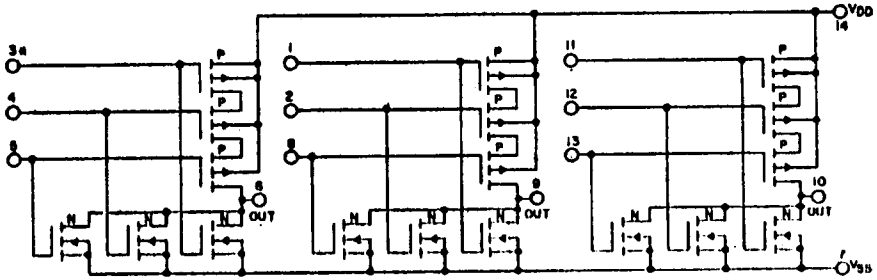

Fig. 1.4—Schematic diagram for type CD4025A.

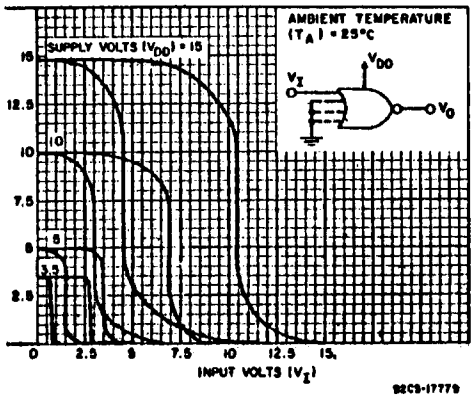

Fig. 1.5—Min. & max. voltage transfer characteristics.

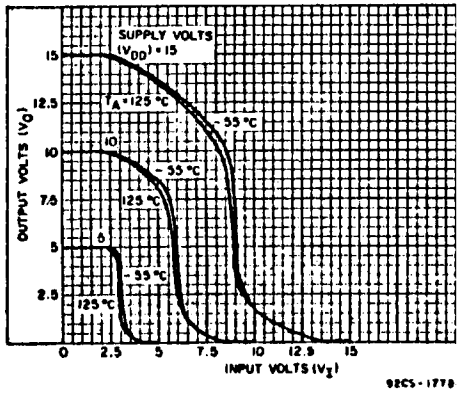

Fig. 1.6—Typ. voltage transfer characteristics as a function of temp.

6-3

PURCHASE ORDER NO. S 02010

SHEET 1 OF 1

PURCHASE ORDER

XX

DATE July 22, 1976

VENDOR

Isotemp Research, Incorporated
711 Henry Avenue
Charlottesville, VA. 22901

Att: Lloyd Tignor

SHIP TO

XX

NATIONAL RADIO ASTRONOMY OBSERVATORY
RECEIVING DEPARTMENT
1000 BULLOCK BLVD.
SOCORRO, NEW MEXICO 87801
TELE 505-835-2924
TELEX 910-988-1710

NATIONAL RADIO ASTRONOMY OBSERVATORY
RECEIVING DEPARTMENT

2015 Ivy Road, Rm. 210
Charlottesville, VA. 22903

VENDOR BEST DELIVERY:	TERMS	F.O.B. POINT	SHIPPING INSTRUCTIONS	TRANSPORTATION CHARGES
N.R.A.O. REQUESTED DELIVERY 8/30/76	1% 10 N/30	Charlottesville, VA.	Vendor Delivered	NONE

ITEM NO.	QUANTITY	DESCRIPTION	UNIT PRICE	AMOUNT	QUANTITY RECEIVED	BACK ORDER
1	2	Voltage controlled, oven stabilized crystal oscillator, F_o=5.0000 13.2 Hz. Voltage cont. ± 1 Hz, stability $1^{o} \times 10^{-}$ 1 Day, Isotemp P/N OCXO-30-10 modified	$175.00	$350.00		
		TOTAL----------		$350.00		
		CONFIRMING TELEPHONE ORDER ON 7/22/76. DO NOT DUPLICATE.				

ACCOUNT NO. 492

PROJECT NO. 13210

R. F. Q. NO.

REQUISITION NO.

DELIVER TO LOCATION H.L. Bearell
2015 Ivy Rd., Rm. 210

N.R.A.O. TECHNICAL INSPECTION APPROVAL REQUIRED BEFORE PAYMENT YES XX NO

RECEIVING DEPT. MATERIAL RECEIVED APPEARS TO BE IN GOOD CONDITION YES NO

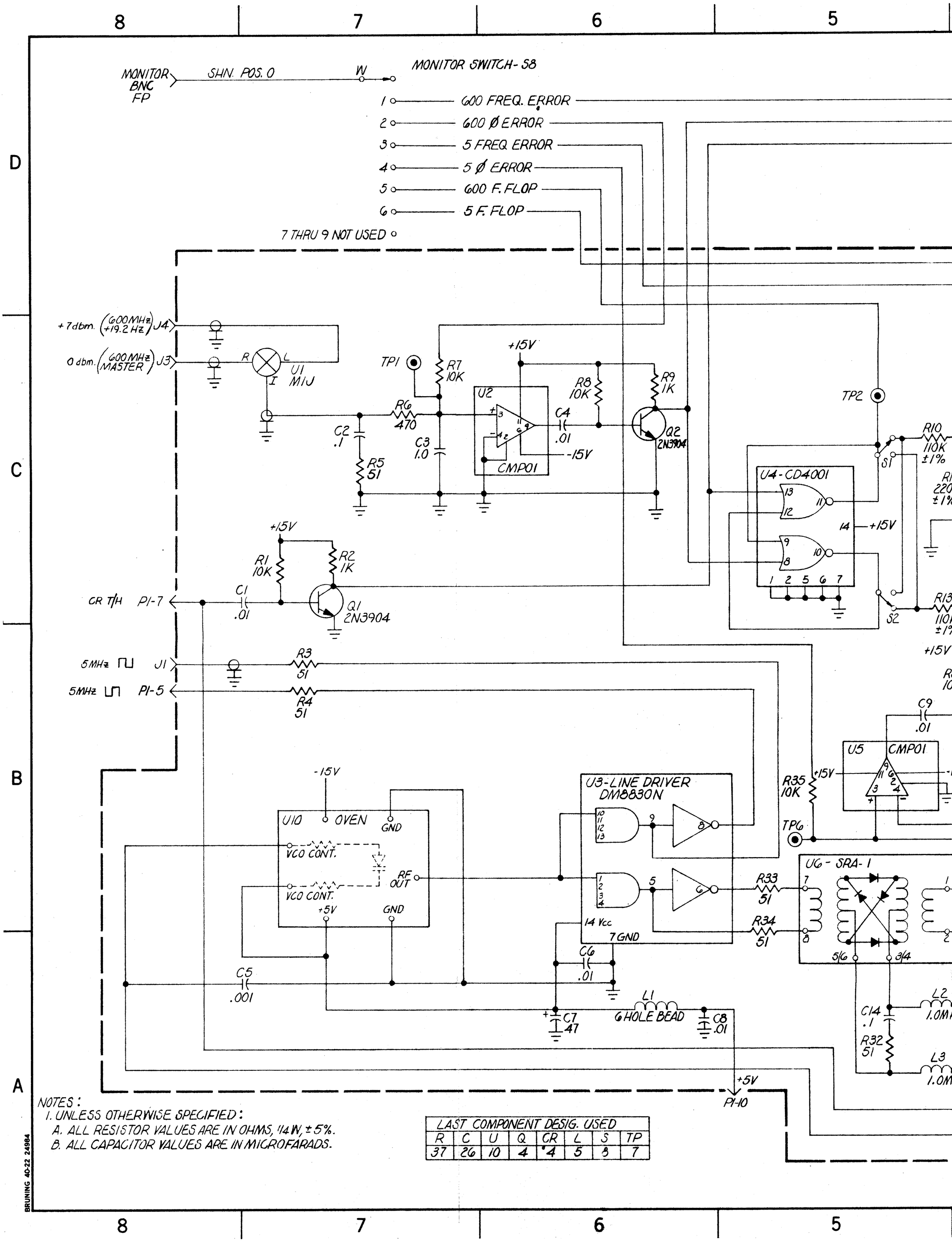

NOTES:
1. UNLESS OTHERWISE SPECIFIED:
A. ALL RESISTOR VALUES ARE IN OHMS, 1/4 W, ± 5%.
B. ALL CAPACITOR VALUES ARE IN MICROFARADS.

LAST COMPONENT DESIG. USED							
R	C	U	Q	CR	L	S	TP
37	26	10	4	4	5	3	7

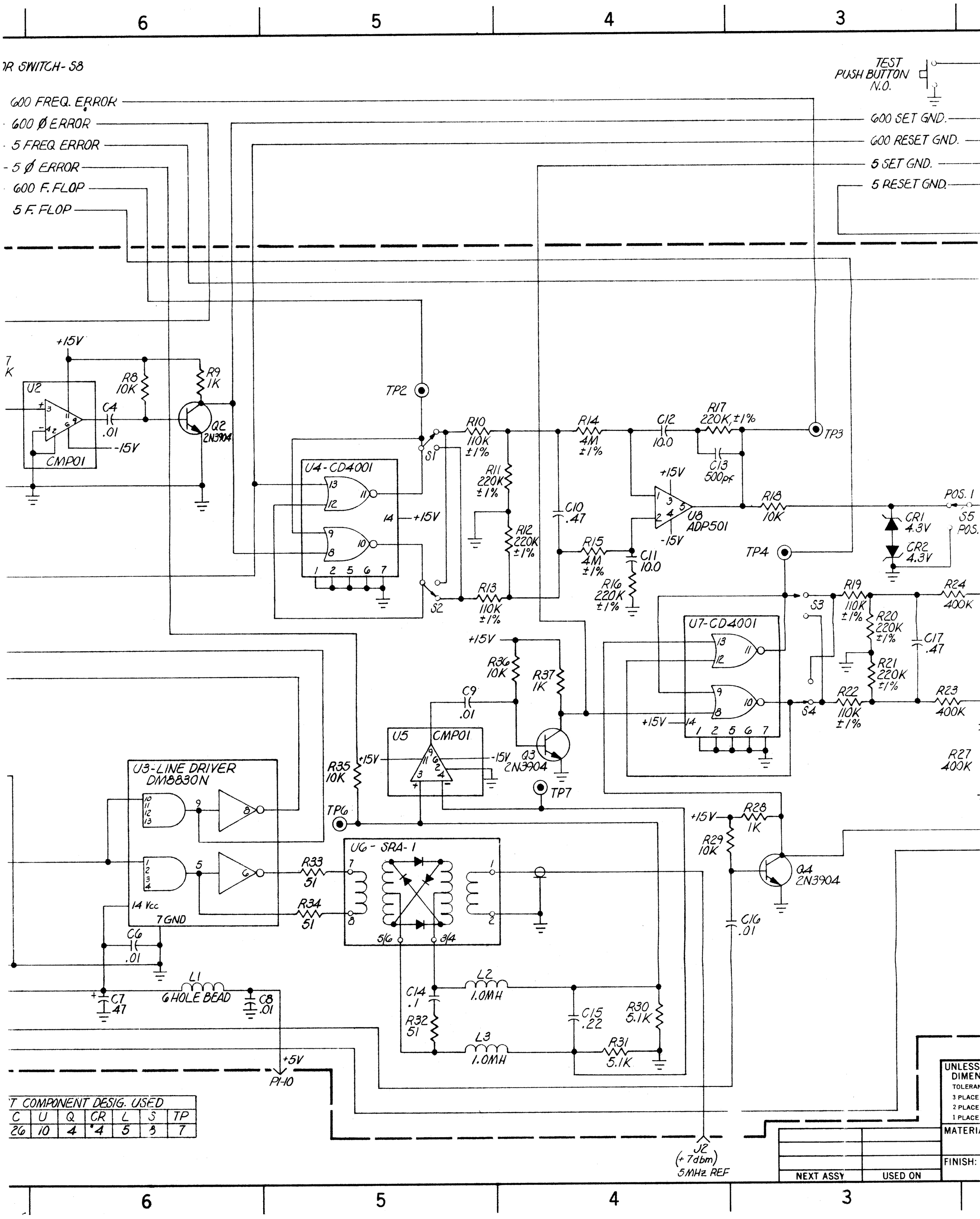

T COMPONENT DESIG. USED						
C	U	Q	CR	L	S	TP
26	10	4	4	5	3	7

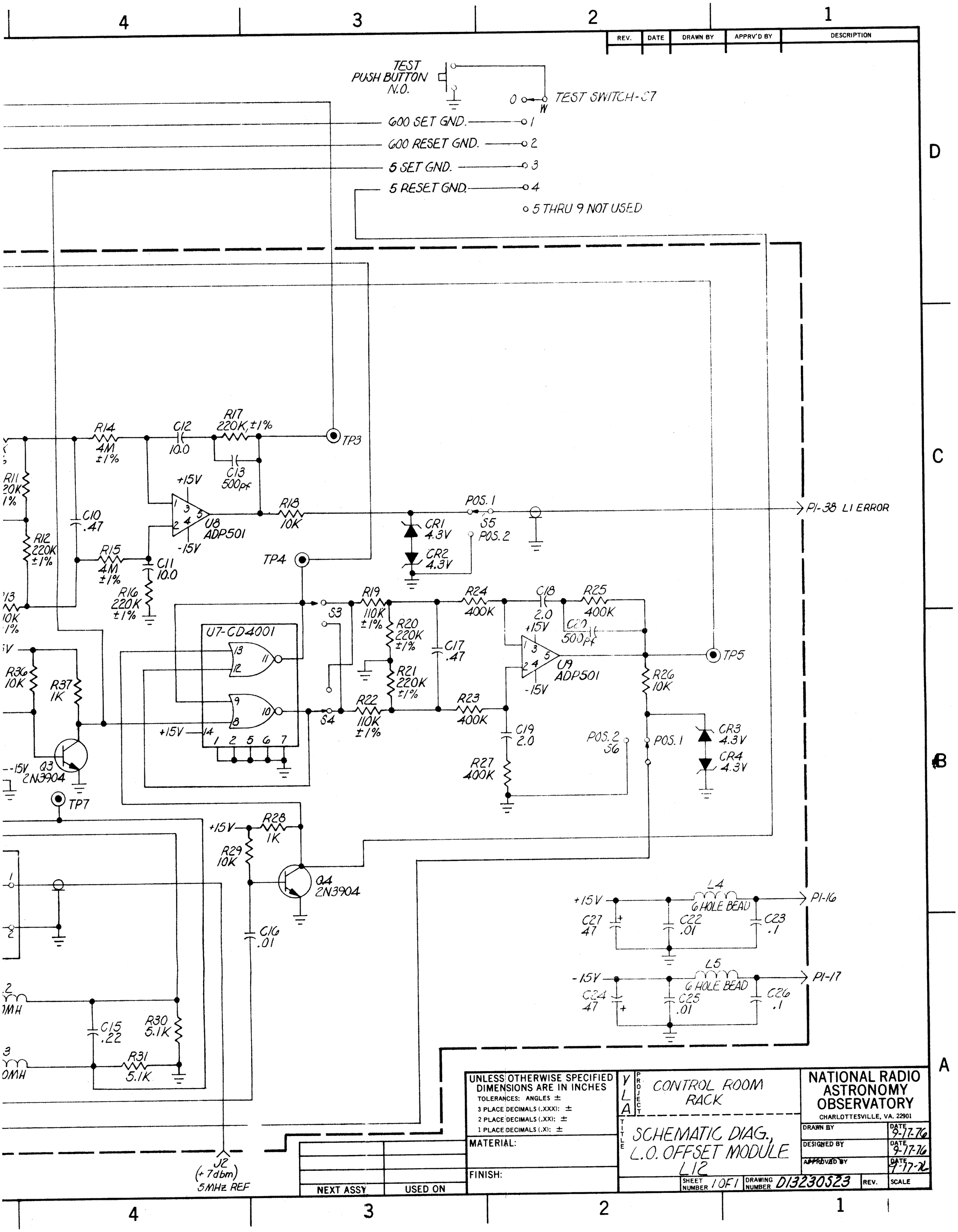

REV.	DATE	DRAWN BY	APPRV'D BY	DESCRIPTION

UNLESS OTHERWISE SPECIFIED DIMENSIONS ARE IN INCHES
TOLERANCES: ANGLES ±
3 PLACE DECIMALS (.XXX): ±
2 PLACE DECIMALS (.XX): ±
1 PLACE DECIMALS (.X): ±

MATERIAL:

FINISH:

NEXT ASSY	USED ON

PROJECT: VLA — CONTROL ROOM RACK

TITLE: SCHEMATIC DIAG., L.O. OFFSET MODULE L12

NATIONAL RADIO ASTRONOMY OBSERVATORY
CHARLOTTESVILLE, VA. 22901

DRAWN BY		DATE 9-17-76
DESIGNED BY		DATE 9-17-76
APPROVED BY		DATE 9-17-76
SHEET NUMBER 1 OF 1	DRAWING NUMBER D13230523	REV. / SCALE