VLA Technical Report No. 36

# MODIFICATIONS IN 1977 TO SOME OF THE L.O. MODULES

D. S. Bagri

March 1978

TABLE OF CONTENTS

LIST OF ILLUSTRATIONS

## 1.0 INTRODUCTION

In this report we describe the modifications made to some of the Local Oscillator modules. A description of the modifications along with reasons for making the changes are given, and effected drawings are listed. Table 1 gives designations and names of the modified modules and their latest revision letter. Notes in Table 1 indicate the modules for which new Block Diagram (BD), Circuit Schematic (S) and Bills of Material (BOM) are included in this report.

TABLE 1: LIST OF MODULES MODIFIED

| | Module Designation | Module Name | Revision Letter | Notes |
|---|---|---|---|---|
| 1. | L1 | 5 to 50 MHz VCXO | B | S |
| 2. | L6 | 2 to 4 GHz Synthesizer | B | BD, S, BOM |
| 3. | L7 | Fringe Generator | B | S |
| 4. | L9 | Central L.O. Receiver | C | BD, S, BOM |
| 5. | L10 | Central L.O. Transmitter | C | BD, S, BOM |
| 6. | L14 | Central L.O. Filter | C | BD, S. BOM |

## 2.0 L1: 5 TO 50 MHz VCXO - REVISION B

### 2.1 Modification Description and Reasons

| Description of Modification | Reasons for Modification |
|---|---|
| (a) Change resistors of π attenuator in 10 MHz output consisting of R26**, R27** and R28** from 82 Ω to 220 Ω, 91 Ω to 24 Ω and 82 Ω to 220 Ω respectively. ** means nominal values of a 50 Ω π attenuator, to be selected to give output power level to within ± 1 dB of + 17 dBm. | To increase 10 MHz output power at L1J2 from +10 to +17 dBm required for new scheme of distributing 10 MHz in B rack. |
| (b) Add a GPD 403 (Avantek) cascadable amplifier on X10 Multiplier PC Board between T11 output and W1 coaxial cable which goes to 50 MHz output at L1J1. Provide + 28 V DC to the X10 Multiplier PC Board through a 0.1 μF RF1 filter feedthru (Spectrum control type BE 001 DA 104 P) mounted on the multiplier enclosure. Connect the power to the GPD403 amplifier through a 62 Ω, ½ Watt resistor. | To increase 50 MHz output at L1J1 from 0dBm to + 10 dBm as required by phase detector in L2C. |

## 2.2 Drawings Effected

| | | |
|---|---|---|
| (a) | BOM: Pwb Assembly, X10 Multiplier | A13230Z36 |
| (b) | Enclosure, X10 Multiplier | A13230Z29 |
| (c) | Assembly: Pwb Assembly, X10 Multiplier | D13230P1 |
| (d) | Enclosure, X10 Multiplier | D13230P4 |
| (e) | Schematic: X10 Multiplier PC Card | D13210S1 |
| (f) | P.C. Board, X10 Multiplier - Artwork | C13210AB1 |
| (g) | - Mechanical | B13230M88 |

## 2.3 Drawings Enclosed

| | | |
|---|---|---|
| (a) | X10 Multiplier schematic (Figure 2.1) | D13210S1 |

| REV | DATE | DRAWN BY | APPROVED BY | DESCRIPTION |
|---|---|---|---|---|
| B | [illegible] | | | REDRAWN |
| C | 1/14/[illegible] | | [illegible] | ADDED NOTE #4 MADE ASSOC. CHGS |

Modified DSB 780310

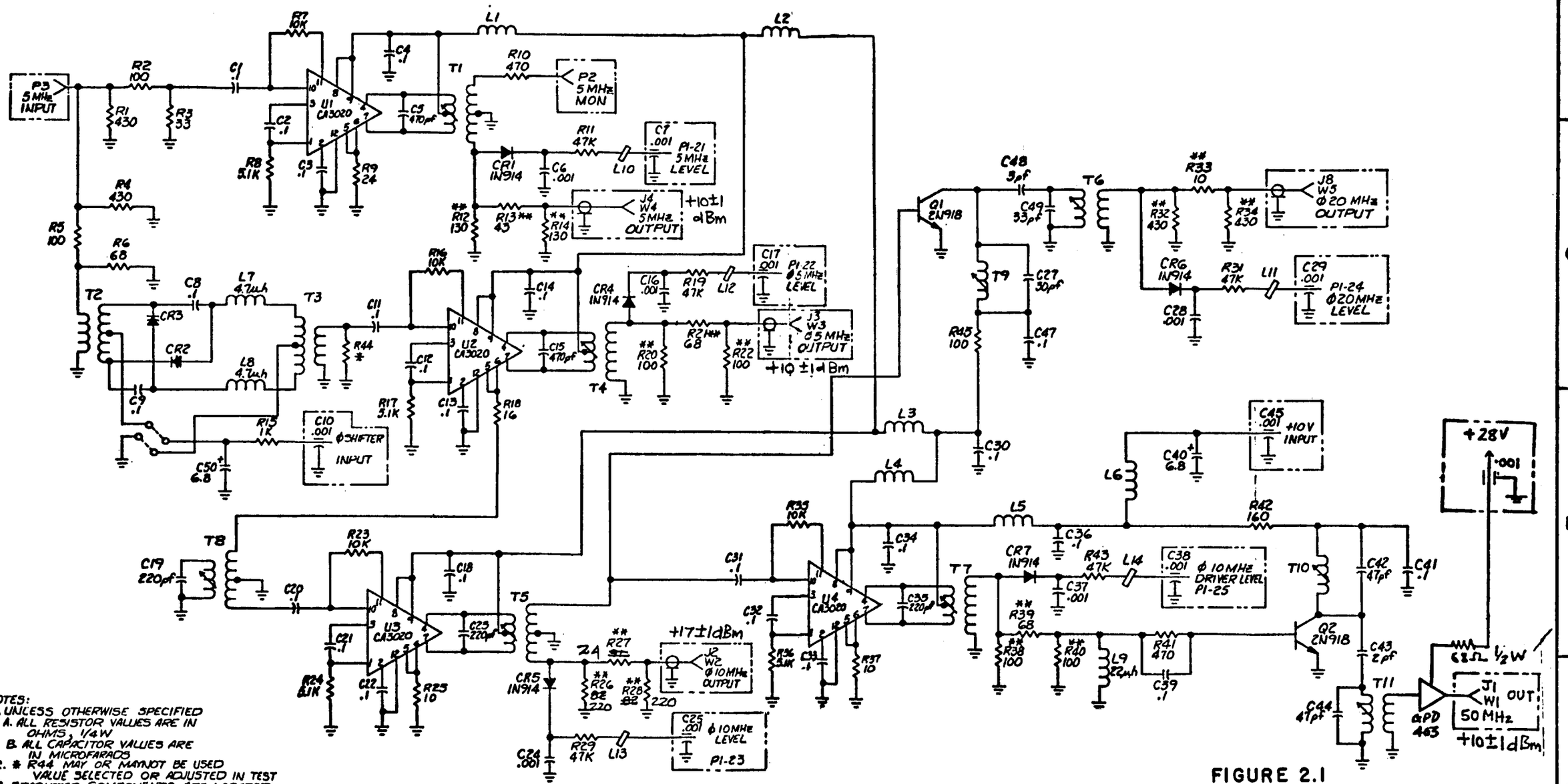


NOTES:
1. UNLESS OTHERWISE SPECIFIED
   A. ALL RESISTOR VALUES ARE IN OHMS, 1/4W
   B. ALL CAPACITOR VALUES ARE IN MICROFARADS
2. * R44 MAY OR MAY NOT BE USED VALUE SELECTED OR ADJUSTED IN TEST
3. BRACKETED COMPONENTS ARE LOCATED ON D13230P22
4. ** NOMINAL VALUES, VALUES SELECTED TO GIVE OUTPUT LEVELS TO MAINTAIN ±1dB

| LAST COMPONENT DESIG. USED | | | | | | |
|---|---|---|---|---|---|---|
| R | C | L | U | Q | CR | T |
| 45 | 50 | 14 | 4 | 2 | 7 | 11 |

| COMPONENT DESIG. NOT USED | | |
|---|---|---|
| C | C | R |
| 26 | 46 | 30 |

FIGURE 2.1

| NEXT ASSY | USED ON |
|---|---|
| | |

UNLESS OTHERWISE SPECIFIED DIMENSIONS ARE IN INCHES
TOLERANCES: ANGLES ±
3 PLACE DECIMALS ±[illegible]
2 PLACE DECIMALS ±[illegible]
1 PLACE DECIMALS ±[illegible]
MATERIAL:
FINISH:

VLA LO SYSTEM

X10 MULTIPLIER P.C. CARD SCHEMATIC

NATIONAL RADIO ASTRONOMY OBSERVATORY
CHARLOTTESVILLE, VA. 22901

DRAWN BY [illegible] DATE 12-8-75
DESIGNED BY DATE
CHECKED BY DATE
APPROVED BY DATE

SHEET NUMBER | DRAWING NUMBER D132105T | REV C | SCALE

## 2.4 Input Output Connections

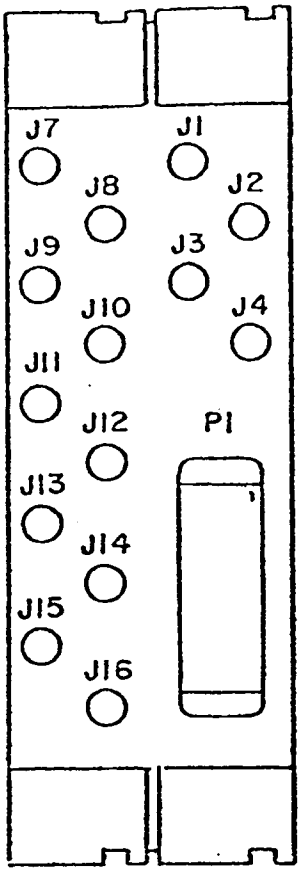


DOUBLE WIDE MODULE
(REAR VIEW)

| CONN | FUNCTION | |
|---|---|---|
| J1 | + 10 ± 1 dBm @ 50 MHz | Output |
| J2 | + 17 ± 1 dBm @ 10 MHz | Output |
| J3 | + 10 ± 1 dBm @ 5 MHz ϕ | Output |
| J4 | + 10 ± 1 dBm @ 5 MHz | Output |
| J7 | | |
| J8 | + 10 @ 20 MHz | Terminated |
| J9 | | |
| J10 | | |
| J11 | | |
| J12 | | |
| J13 | | |
| J14 | | |
| J15 | | |
| J16 | | |

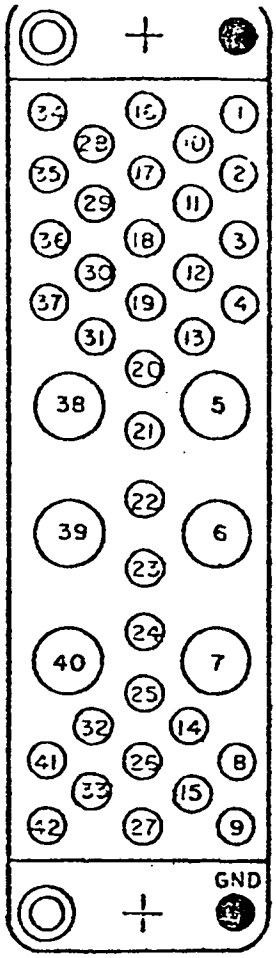


P1 (REAR VIEW)

P1

| PIN | FUNCTION | WIRE COLOR | PIN | FUNCTION | WIRE COLOR |
|---|---|---|---|---|---|
| 1 | | | 22 | Power 5 MHz 0 | Red/Wht |
| 2 | | | 23 | Power 10 MHz | Org/Wht |
| 3 | | | 24 | Power 20 MHz | Yel/Wht |
| 4 | | | 25 | Power 10 MHz Drive | Org/Wht |
| 5 | | | 26 | | |
| 6 | | | 27 | | |
| 7 | | | 28 | −28VDC * | GREEN |
| 8 | | | 29 | +28VDC | GREY |
| 9 | | | 30 | | |
| 10 | +5VDC * | ORANGE | 31 | | |
| 11 | −5VDC * | BROWN | 32 | | |
| 12 | | | 33 | | |
| 13 | High Quality Ground | | 34 | PWR. GROUND | BLACK |
| 14 | | | 35 | | |
| 15 | | | 36 | | |
| 16 | +15VDC | RED | 37 | | |
| 17 | −15VDC * | YELLOW | 38 | 5 MHz-VCXO Cont. Volt. | Co-Axial RG 174/U |
| 18 | | | 39 | | |
| 19 | | | 40 | | |
| 20 | | | 41 | | |
| 21 | Power 5 MHz | Brn/Wht | 42 | HIGH QUAL. GROUND | * |

* INDICATES A FUNCTION NOT FOUND IN THIS MODULE.

## 3.0 L6: 2 TO 4 GHz SYNTHESIZER - REVISION B

### 3.1 Modification Description and Reasons Reference Block Diagram D13250B01

| Description of Modification | Reasons for Modification |
|---|---|
| (a) Change first mixer from MD525-4 (Anzac) to M1H (Watkins-Johnson). | To get better isolation between L.O. and RF ports and operation from a high level mixer to a low level mixer. |
| (b) Change 2-way power divider PDM20-500 (Merrimac) at the output of 28 dB, 0.01 to 1 GHz amplifier to 10 dB directional coupler DCG-10-4 (Anzac). -10 dBc coupled port goes to L6J13 and the direct output to the phase lock loop PC Board. | To increase the output going to the L.O. port of the second mixer located on the phase lock board. |
| (c) Add a 3 dB attenuator before 600 MHz LPF. | To minimize variation of signal levels between various 50 MHz harmonics (comb-lines) going to RF port of the second mixer located on the phase lock board. |
| (d) Add a BPF 3B120-3000/500-0 (K and L Microwave, Inc.) between L6J9 and coaxial relay which selects between reference or alternate reference. | To reduce leakage of YIG oscillator output from one L6 to another through 3000 MHz reference line. |

| | |
|---|---|
| (e) Replace 50 MHz comb generator by a 10 dB attenuator. | Design changes of L2 and L3 modules provide phase stable 50 MHz comb; therefore, this comb generator is no longer required. A 10 dB pad is introduced to keep proper comb level to the phase lock board, which will minimize chances of false lock till a later day when the phase lock board is re-designed. |
| (f) Replace Cinch Barrier terminal block on which DC power supply connections are brought from AMP Connector by a filter mounting block (NRAO-B13440M31) and add 0.1 μF RFI suppression filters (Spectrum control type BE001DA104P) in all power supply lines soon after AMP Connector | Filtering 100 kHz and 5 MHz floating around in the B rack. Also suppressing transients on power supply lines, especially + 28 V when coaxial relays are switched ON and OFF in the L6. |
| (g) Add resistors R36, R37, R38, and R39, C34 and C36 and diodes CR3 to CR6 on the PLL PC Board (see drawing No. C13250S2). | RC time constants are put to reduce amplitude of transients and diodes are put to protect the CMOS analog switches from the transients. |

| | |
|---|---|
| (h) Add a series capacitor C35 and an inductor L1 to ground at the L.O. port of the second mixer MD113 (U1 on the phase lock board - see circuit schematic C13250S2).<br>L1 = 0.1 μH<br>C35 = 75 PF CHIP Capacitor | Filter out 10 MHz coming from 0.01 to 1 GHz amplifier. The 10 MHz is generated due to finite isolation between two L6's and intermodulation in the amplifier. |
| (i) Replace 1200 MHz low pass filter in the 50 MHz comb signal path by a 0.141" coaxial cable. | The design changes of L2C module requires that a 1050 MHz LPF is used in outputs of the comb lines coming out of the L2C module. Thus, the 50 MHz comb spectrum is already limited to 1050 MHz and the 1200 LPF is no longer necessary. |

3.2 Drawings Effected

See enclosed list - page 3.4

3.3 Drawings Enclosed

| | |
|---|---|
| (a) L6 Block Diagram (Figure 3.1) | D13250B01 |
| (b) Phase Lock Loop P.C. Board Schematic (Figure 3.2) | C13250S02 |
| (c) Drive Circuit, etc. (Figure 3.3) | C13250S4 |
| (d) BOM: L6 (Table 3.1) | A13250Z10 |
| (e) BOM: PLL PC Board (Table 3.2) | A13250Z05 |

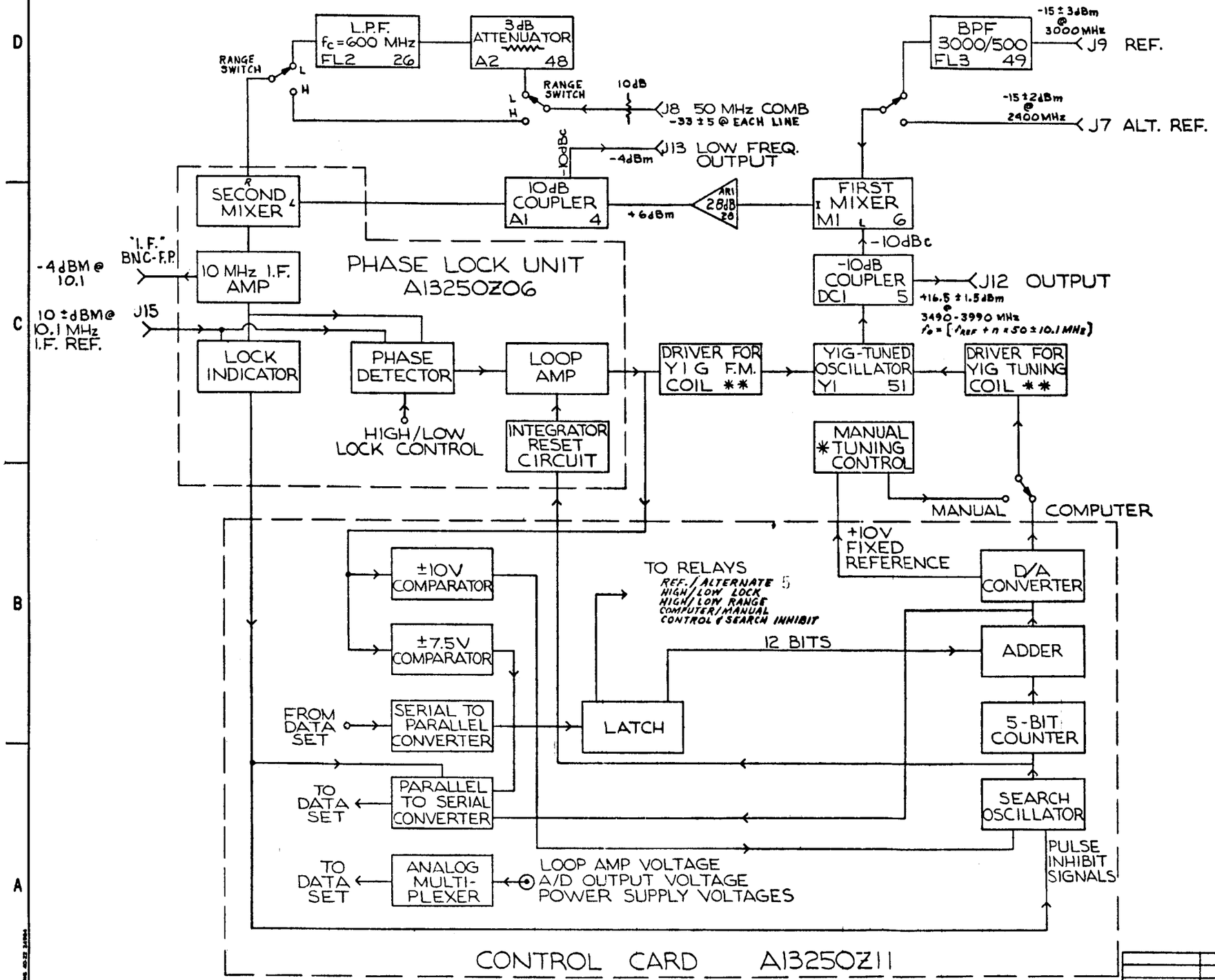


NOTES:

1. J7, J8, J9, J12, J13 & J15 ARE ON REAR PANEL.
2. * = B.O.M. A13250Z08, ITEM 15.
   ** = B.O.M. A13250Z07
3. FL1 25
   - ITEM NO.'S PER B.O.M. A13250Z10
   - REF. DESIG. PER IEEE NO. 315 & NRAO SPEC.
4. ALL POWER SUPPLIES IN MODULE ARE FIRST FILTERED USING 0.1μF RFI FEED THRUS.

FIGURE 3.1

| | | | | |
|---|---|---|---|---|
| UNLESS OTHERWISE SPECIFIED DIMENSIONS ARE IN INCHES. TOLERANCES: ANGLES ±; 3 PLACE DECIMALS (.XXX) ±; 2 PLACE DECIMALS (.XX) ±; 1 PLACE DECIMALS (.X) ±. MATERIAL: FINISH: | PROJECT: L6 2-4 GHz SYNTHESIZER | NATIONAL RADIO ASTRONOMY OBSERVATORY CHARLOTTESVILLE, VA. 22901 | | |
| | TITLE: BLOCK DIAGRAM | DRAWN BY: | DATE: 3-9-77 | |
| | | DESIGNED BY: | DATE | |
| | | APPROVED BY | DATE 3-10-78 | |
| NEXT ASSY / USED ON | SHEET NUMBER 1 of 1 | DRAWING NUMBER D13250B01 | REV. | SCALE |

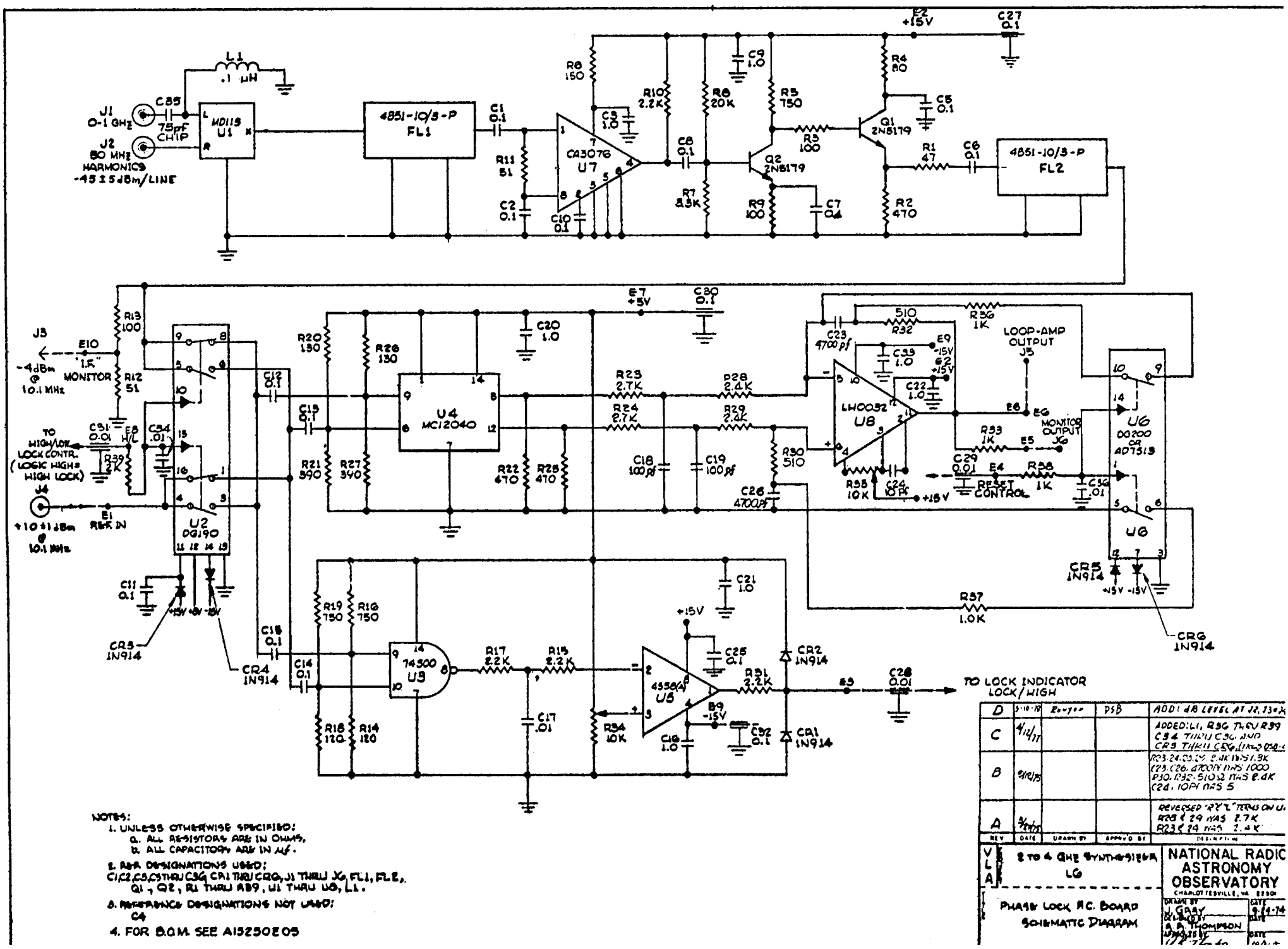


NOTES:

1. UNLESS OTHERWISE SPECIFIED:
   a. ALL RESISTORS ARE IN OHMS.
   b. ALL CAPACITORS ARE IN μf.
2. R&R DESIGNATIONS USED:
   C1, C2, C5, C7 THRU C36, CR1 THRU CR6, J1 THRU J6, FL1, FL2, Q1, Q2, R1 THRU R39, U1 THRU U8, L1.
3. REFERENCE DESIGNATIONS NOT USED:
   C4
4. FOR B.O.M. SEE A19230E05

| REV | DATE | DRAWN BY | APPROV'D BY | DESCRIPTION |
|---|---|---|---|---|
| D | 3-10-77 | Bowyer | PSB | ADD: dB LEVEL AT J2, J3 & J4 |
| C | 4/12/77 | | | ADDED: L1, R36 THRU R39, C34 THRU C36, AND CR5 THRU CR6, LINE 3 DESC. |
| B | 9/12/75 | | | R23, 24, 29, 30 2.4K WAS 1.8K; R28, C26, 4700PF WAS 1000; R30, R32: 510Ω WAS 8.4K; C24, 10PF WAS 5 |
| A | 3/24/75 | | | REVERSED "RX" & "TERM" ON U2; R28 & 29 WAS 2.7K; R23 & 24 WAS 2.4K |

VLA

2 TO 4 GHz SYNTHESIZER
LG

PHASE LOCK P.C. BOARD
SCHEMATIC DIAGRAM

NATIONAL RADIO ASTRONOMY OBSERVATORY
CHARLOTTESVILLE, VA 22901

DRAWN BY: N. GRAY — DATE: 9-24-74
CHECKED BY: A. A. THOMPSON — DATE:
APPROVED BY: — DATE:

FIGURE 3-2

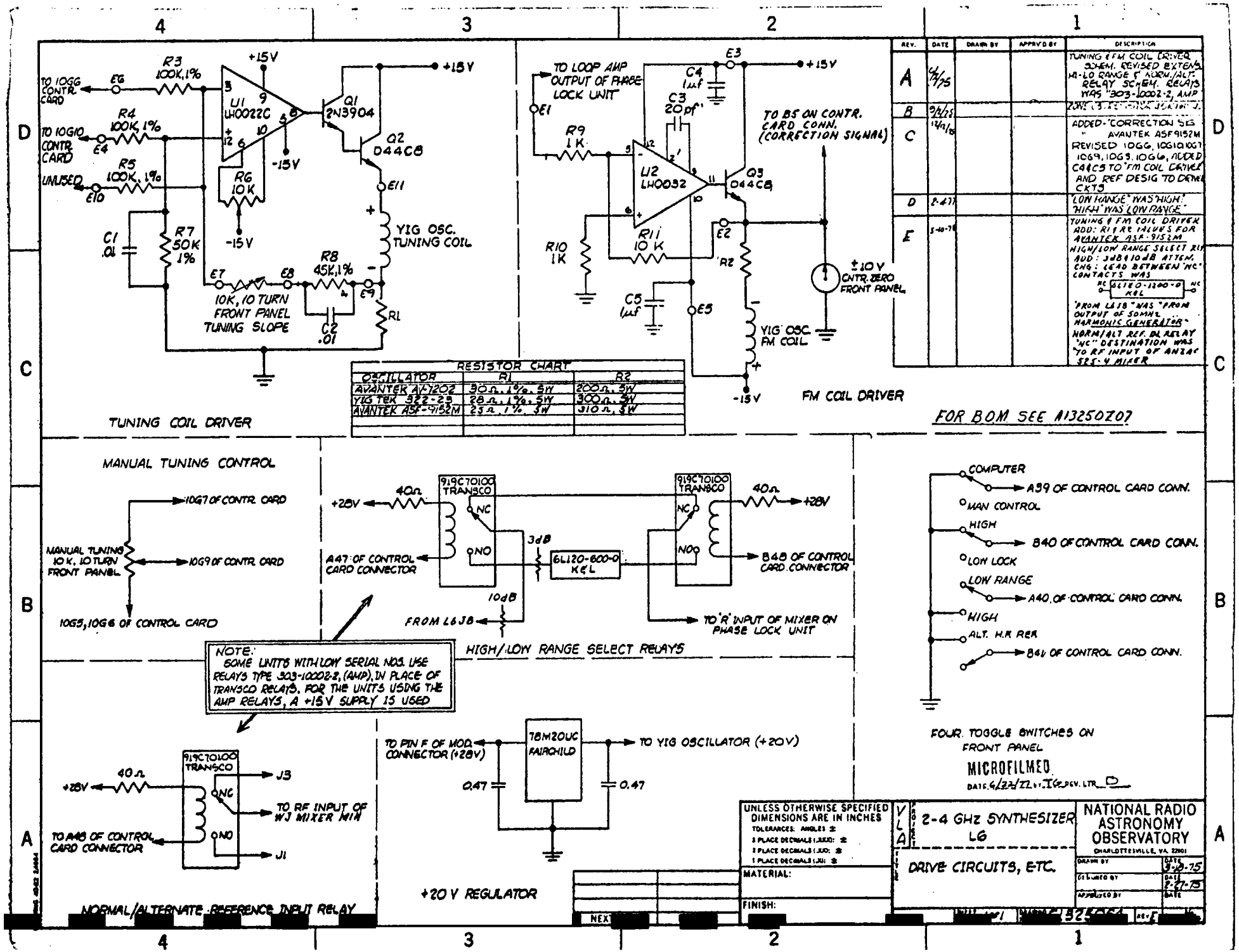
TUNING COIL DRIVER
TO 10GG CONTR. CARD
TO 10G10 CONTR. CARD
UNUSED
R3 100K,1%
R4 100K,1%
R5 100K,1%
R6 10K
R7 50K 1%
R8 45K,1%
C1 .01
C2 .01
U1 LH0022C
Q1 2N3904
Q2 D44C8
+15V
-15V
YIG OSC. TUNING COIL
10K, 10 TURN FRONT PANEL TUNING SLOPE
RL
TO LOOP AMP OUTPUT OF PHASE LOCK UNIT
R9 1K
R10 1K
R11 10K
C3 20pf
C4 1µf
C5 1µf
U2 LH0032
Q3 D44C8
TO B5 ON CONTR. CARD CONN. (CORRECTION SIGNAL)
±10V CNTR. ZERO FRONT PANEL
YIG OSC. FM COIL
FM COIL DRIVER
RESISTOR CHART
OSCILLATOR | R1 | R2
AVANTEK AV-1202 | 50Ω, 1%, 5W | 200Ω, 5W
YIG TEK 322-2B | 28Ω, 1%, 5W | 300Ω, 5W
AVANTEK ASF-9152M | 23Ω, 1%, 5W | 310Ω, 5W
FOR B.O.M. SEE A13250207
MANUAL TUNING CONTROL
10G7 OF CONTR. CARD
MANUAL TUNING 10K, 10 TURN FRONT PANEL
10G9 OF CONTR. CARD
10G5, 10G6 OF CONTROL CARD
+28V
40Ω
919C70100 TRANSCO
NC
NO
A47 OF CONTROL CARD CONNECTOR
3dB
6L120-600-0 KEL
10dB
FROM L6J8
B48 OF CONTROL CARD CONNECTOR
TO 'R' INPUT OF MIXER ON PHASE LOCK UNIT
HIGH/LOW RANGE SELECT RELAYS
COMPUTER
A39 OF CONTROL CARD CONN.
MAN CONTROL
HIGH
B40 OF CONTROL CARD CONN.
LOW LOCK
LOW RANGE
A40 OF CONTROL CARD CONN.
HIGH
ALT. H.R. REF.
B41 OF CONTROL CARD CONN.
FOUR TOGGLE SWITCHES ON FRONT PANEL
NOTE: SOME UNITS WITH LOW SERIAL NOS. USE RELAYS TYPE 303-10002-2, (AMP), IN PLACE OF TRANSCO RELAYS. FOR THE UNITS USING THE AMP RELAYS, A +15V SUPPLY IS USED
J3
J1
TO RF INPUT OF W3 MIXER MIN
TO A48 OF CONTROL CARD CONNECTOR
NORMAL/ALTERNATE REFERENCE INPUT RELAY
TO PIN F OF MOD. CONNECTOR (+28V)
78M20UC FAIRCHILD
TO YIG OSCILLATOR (+20V)
0.47
+20 V REGULATOR
MICROFILMED
UNLESS OTHERWISE SPECIFIED DIMENSIONS ARE IN INCHES
MATERIAL:
FINISH:
2-4 GHz SYNTHESIZER LG
DRIVE CIRCUITS, ETC.
NATIONAL RADIO ASTRONOMY OBSERVATORY
CHARLOTTESVILLE, VA. 22901
DRAWN BY
DATE 3-3-75
DATE 2-27-75

FIGURE 3-3

## List of L6 Drawings Effected

### I. 2-4 GHz Synthesizer Module (L6) Drawings, Artwork & Bills of Materials

#### Schematic & Logic Diagrams

| | | |
|---|---|---|
| Phase Lock Unit | C13250S2 | ← Effected |
| ~~50 MHz Harmonic Generator~~ | ~~B13250S3~~ | Deleted |
| Drive Circuits Etc. | C13250S4 | ← Effected |
| Control and Interface Card | D13250L3 | |

#### Bills of Material

| | | |
|---|---|---|
| Phase Lock Unit | A13250Z5 | ← Effected |
| Phase Lock Unit Enclosure | A13250Z6 | |
| Driver Board | A13250Z7 | |
| Front Panel Assembly | A13250Z8 | |
| ~~50 MHz Harmonic Gen.~~ | ~~A13250Z9~~ | Deleted |
| Component Plate | A13250Z10 | ← Effected |
| Control and Interface Card | A13250Z11 | |

#### Assembly Drawings

| | | |
|---|---|---|
| 2-4 GHz Synthesizer | D13250P7 | ← Effected |
| Phase Lock Unit P.C. Board | C13250P5 | ← Effected |
| Phase Lock Unit Enclosure | C13250P6 | |
| 50 MHz Harmonic Gen. | C13250P8 | Deleted |
| Front Panel | C13250P9 | |
| Control and Interface Card | C13250P10 | |
| Driver Board | B13250P11 | |

#### Wiring Lists

| | |
|---|---|
| Control and Interface Card | A13250W3 |

#### Printed Circuit Board

| | Artwork | Silk Screen | Drill Drawings | |
|---|---|---|---|---|
| Phase Lock Unit | C13250AB6 ← | C13250AB5 ← | D13250M20 ← | Effected |
| ~~50 MHz Harmonic Generator~~ | ~~A13250AB7~~ | | ~~C13250M24~~ | Deleted |
| Driver Board | B13250AB3 | B13250AB4 | C13250M23 | |
| Meter Resistor Board | B13250AB8 | | B13250M25 | |

#### Mechanical Drawings

| | | |
|---|---|---|
| Rear Panel | B13250M11 | |
| Front Panel | C13250M12 | |
| Bar Supports, Right Side | B13250M28 | (Parts 1&2) |
| Bar Supports, Left Side | B13050M28 | (Parts 3&4) |
| Top & Bottom Cover | C13050M22-2 | |
| Side Plate | B13050M18 | |
| Component Plate | C13250M21 | ← Effected |
| Mixer and Coupler Mounting Bracket | B13250M27 | ← Effected |
| Filter Mounting Brackets | C13250M26 | |
| Mounting Brackets for 100-pin Connector | B13250M15 | |
| Guide | B13050M4 | |
| Tuning Coil | C13250M29 | |
| Phase Lock Unit Enclosure | C13250M22 | |
| Wire Wrap Board | D13520M1 | |

## 3.4 Input-Output Connections

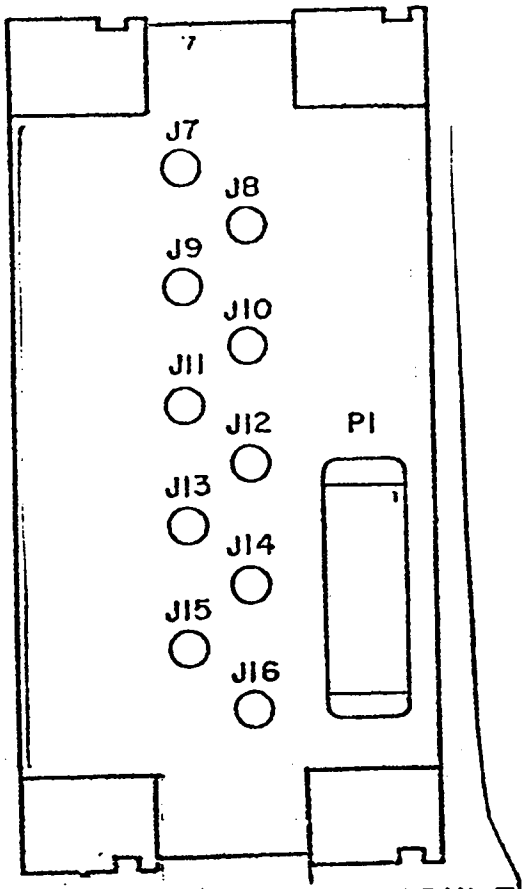


TRIPLE WIDE MODULE
(REAR VIEW)

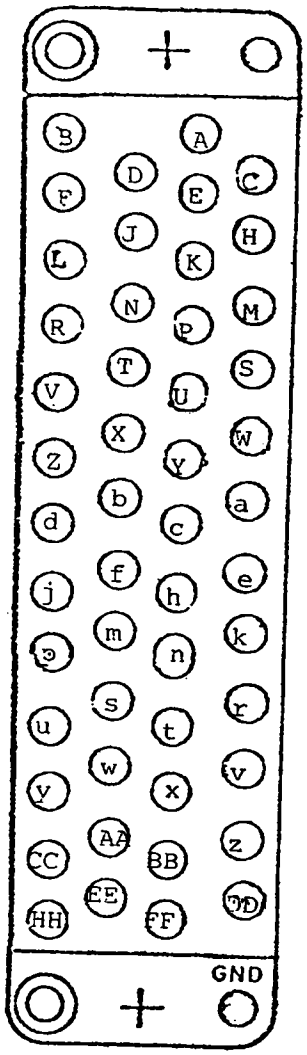


P1 (REAR VIEW)

| OMQ Connector | | |
|---|---|---|
| J7 | -15 ± 2 dBm @ 2400 MHz | Input |
| J8 | 50 MHz Comb -33 ± 5 dBm/line | Input |
| J9 | -15 ± 3 dBm @ 3000 MHz | Input |
| J10 | | |
| J11 | | |
| J12 | +16.5 ± 1.5 dBm @ 3.49 to 3.99 GHz | Output |
| J13 | First IF OUT | |
| J14 | | |
| J15 | +10 ± 1 dBm @ 10.1 MHz | Input |
| J16 | | |

| Pin | Function |
|---|---|
| A | +15 V |
| B | Ground |
| C | +5 V |
| D | |
| E | -15 V |
| F | |
| H | Analog MUX. Input Ch. 3 |
| J | |
| K | |
| L | Ground |
| M | Address Bit 1 (LSB) (Low True) |
| N | Address Bit 2 (LSB) (Low True) |
| P | Address Bit 3 (LSB) (Low True) |
| R | Address Bit 4 (MSB) (Low True) |
| S | Serial Input (Low True) |
| T | Input Lock (Low Ture) |
| U | Input Strobe (Low True) |
| V | Serial Output (Low True) |
| W | Output Clock (Low True) |
| X | Output Strobe (Low True) |
| Y | Input Enable In (Low True) |
| Z | Output 1 Enable (In) (Low True) |
| a | Output 2 Enable (In) (Low Ture) |
| b | Enable Signal, Sub Mux Add. 0 (Low True) |
| c | Enable Signal, Sub Mux Add. 1 (Low True) |
| d | Enable Signal, Sub Mux Add. 2 (Low True) |
| e | Enable Signal, Sub Mux Add. 3 (Low True) |
| f | Enable Signal, Sub Mux Add. 4 (Low True) |
| h | Enable Signal, Sub Mux Add. 5 (Low True) |
| j | Enable Signal, Sub Mux Add. 6 (Low True) |
| k | Enable Signal, Sub Mux Add. 7 (Low True) |
| m | Enable Signal, Sub Mux Add. 8 (Low True) |
| n | Enable Signal, Sub Mux Add. 9 (Low True) |

| Pin | Function |
|---|---|
| p | Enable Signal, Sub Mux Add. 10 (Low True) |
| r | Enable Signal, Sub Mux Add. 11 (Low True) |
| s | Enable Signal, Sub Mux Add. 12 (Low True) |
| t | Enable Signal, Sub Mux Add. 13 (Low True) |
| u | Enable Signal, Sub Mux Add. 14 (Low True) |
| v | Enable Signal, Sub Mux Add. 15 (Low True) |
| w | Analog MUX OUTPUT (High) |
| x | Analog MUX OUTPUT (GRD) |
| y | |
| z | Analog MUX INPUT Ch. 7 (+28V) |
| AA | |
| BB | GRD. Signal, GRD. Digital |
| CC | GRD. Signal, GRD. Digital |
| DD | GRD. Signal, GRD. Digital |
| EE | |
| FF | |
| HH | |

BILL OF MATERIAL

NATIONAL RADIO ASTRONOMY OBSERVATORY

[X] ELECTRICAL [X] MECHANICAL BOM # A13250 Z10 REV A DATE _____ PAGE 1 OF 3

MODULE # L6 NAME 2-4 GHz Synthesizer DWG # D13250P7 SUB ASMB Component Plate DWG # _____

SCHEMATIC DWG # _____ LOCATION _____ QUA/SYSTEM _____ PREPARED BY C. Pace APPROVED _____

TABLE 3.1: BOM: A13250Z10

| ITEM # | REF DESIG | MANUFACTURER | MFG PART # | DESCRIPTION | TOTAL QUA | |
|---|---|---|---|---|---|---|
| 1 | | NRAO | A13250Z10 | Component Plate Assembly | -- | |
| 2 | | NRAO | C13250M21 | Component Plate | 1 | |
| 3 | | | | | | |
| 4 | | ~~Merrimac~~ Anzac | DCG 10-4 ~~PDM-20-500~~ | 10 dB Directional Coupler ~~Power-Splitter~~ | 1 | |
| 5 | | Omni Spectra | 20054-10 | Directional Coupler | 1 | |
| 6 | | ~~Anzac-~~ Watkins-Johnson | ~~MD-525-4~~ M1H | Mixer | 1 | |
| 7 | | NRAO | B13250M27 | Mixer-Coupler Mounting Bracket | 1 | |
| 8 | | NRAO | C13250M26 | Filter Mounting Bracket | 1 | |
| 9 | | H. H. Smith | 8370 | Spacer (1-3/4" long x 8-32) | 6 | |
| 10 | | | | #8-32 x 5/8 LG Socket Head Screw | 6 | |
| 11 | | | | #4-40 x 1/2 LG Flat Head Screw | 2 | |
| 12 | | | | #4-40 x 1/2 LG Pan Head Screw | 4 | |
| 13 | | | | #4-40 x 1/4 LG Pan Head Screw | 11 | |
| 14 | | | | #6-32 x 3/8 LG Pan Head Screw | 4 | |
| 15 | | | | #2-56 x 1/4 LG Socket Head Screw | 14 | |

BILL OF MATERIAL

NATIONAL RADIO ASTRONOMY OBSERVATORY

[X] ELECTRICAL [X] MECHANICAL BOM # A13250 Z10 REV A DATE _____ PAGE 3 OF 3

| ITEM # | REF DESIG | MANUFACTURER | MFG PART # | DESCRIPTION | TOTAL QUA | |
|---|---|---|---|---|---|---|
| 33 | | Dale | RH-5 | 5 ohm 1% 5W | 1 | |
| 34 | | Omni Spectra | 201-1A | Straight Connector (.141) | 8 | |
| 35 | | Omni Spectra | 221-1 | Right Angle Connector (.141) | 14 | |
| 36 | | Omni Spectra | 531-3 | Right Angle Connector (.188) | 1 | |
| 37 | | Omni Spectra | OMQ 3C 75 | R.F. Connector | 6 | |
| 38 | | Omni Spectra | 218 | Male to Male Connector | 4 | |
| 39 | | Alpha | RG188 A/u | RF Cable 13" | 1 | |
| 40 | | Uniform Tubes | UT 141 | RF CAble 10' | 1 | |
| 41 | | Omni Spectra | 219 | RT Angle Connector | 1 | |
| 42. | | Dale | RH-5 | 40 ohm 1% 5W | 3 | |
| 43 | | | | 2-56 x 5/8" Pan Head Screw | 4 | |
| 44 | | | | #2 Washer Flat | 6 | |
| 45 | | | | 2 x 56 x 7/8" Flat Head Screw | 2 | |
| 46 | | Alpha Plastics | Fit 105 | Shrink tubing 1/16" | | |
| 47 | | Alpha Plastics | Fit 105 | Shrink tubing 1/4" | | |
| 48 | | Narda | 4772-3 | 3 dB Attenuator | 1 | |
| 49 | | K & L Microwave | 3B120-3000/500-0 | BPF | 1 | |
| 50 | | Spectrum Control | BE001DA104P | .1μF RFI Suppression Filters | 5 | |

TABLE 3.1: BOM: A13250Z10 (CONT.)

BILL OF MATERIAL

NATIONAL RADIO ASTRONOMY OBSERVATORY

[X] ELECTRICAL [ ] MECHANICAL BOM # A1325075 REV -B- E DATE DJB 770608 PAGE 1 OF 4

MODULE # L6 NAME PHASE LOCK UNIT ENCLOSURE DWG # C13250P6 SUB ASMB P.C. BOARD ASS'Y DWG # C13250P5

SCHEMATIC DWG # _____ LOCATION _____ QUA/SYSTEM _____ PREPARED BY C. Pace APPROVED _____

| ITEM # | REF DESIG | MANUFACTURER | MFG PART # | DESCRIPTION | TOTAL QUA | |
|---|---|---|---|---|---|---|
| 1 | | N.R.A.O. | A13250Z5 | PC BOARD ASS'Y | -- | |
| 2 | | N.R.A.O. | C13250M20 | P.C. BOARD | 1 | |
| 3 | | Robinson Nuggent | 1CN163-S3 | 16 Pin Socket (Dip) | 2 | |
| 4 | | Robinson Nuggent | DP5178 | 8 Pin Socket (Round) | 2 | |
| 5 | | Birtcher | 3AL 635 2R | Heatsink | 1 | |
| 6 | | Robinson Nuggent | 1CH083-S3 | 8 Pin Socket (Dip) | 1 | |
| 7 | | Robinson Nuggent | 1CN143-S3 | 14 Pin Socket (Dip) | 2 | |
| 8 | | Cinch | 3LPS-B | Transistor Socket | 2 | |
| 9 | | Keystone | 1502-3 | Terminal | 8 | |
| 10 | | Thermalloy | 2266B | Heatsink | 1 | |
| 11 | | Robinson Nugent | MP12100 | 12,Pin Socket | 1 | |
| 12 | A | Anzac | MD113 | Mixer | 1 | |
| 13 | FL1-2 | K & L | 4B51-10/5.5P | Filter | 2 | |
| 14 | U7 | RCA | CA 3076 | RF Limiter | 1 | |
| 15 | Q 1-2 | RCA | 2N 5179 | Transistor | 2 | |

TABLE 3.2: BOM: A13250Z05

BILL OF MATERIAL

NATIONAL RADIO ASTRONOMY OBSERVATORY

[x] ELECTRICAL [ ] MECHANICAL BOM # A13250Z5 REV -D- E DATE _____ PAGE 2 OF 4

| ITEM # | REF DESIG | MANUFACTURER | MFG PART # | DESCRIPTION | TOTAL QUA. | |
|---|---|---|---|---|---|---|
| 16 | U4 | Motorola | MC12040 | Phase Detector | 1 | |
| 17 | U8 | National | LH0032C | RF Amp | 1 | |
| 18 | U5 | Raytheon | RC4558DN | Op Amp | 1 | |
| 19 | U2 | Siliconix | DG190BP | Fet Switch SPDT | 2 | |
| 20 | U3 | T. I. | 74S00 | Nand Gate | 1 | |
| 21 | CR1-2 | | IN914 | Diode | 2 | |
| 22 | R11, R12 | | | Resistor 51 Ω, 1/4 W, 5% | 2 | |
| 23 | R6 | | | Resistor 150Ω, 1/4 W, 5% | 1 | |
| 24 | R10, R15 R31, R17 | | | Resistor 2.2K Ω, 1/4 W, 5% | 4 | |
| 25 | R8 | | | Resistor 20K Ω, 1/4 W, 5% | 1 | |
| 26 | R7 | | | Resistor 3.3K Ω, 1/4 W, 5% | 1 | |
| 27 | R9,R3,R13 | | | " 100 Ω " " | 3 | |
| 28 | R5, R 19 R16 | | | " 750 Ω " " | 3 | |
| 29 | R4 | | | " 30 Ω " " | 1 | |
| 30 | R2, R22 R25 | | | " 470 Ω " " | 3 | |
| 31 | R1 | | | " 47 Ω " " | 1 | |
| 32 | R20, R26 | | | " 130 Ω " " | 2 | |

TABLE 3.2: BOM: A13250Z05 (CONT.)

NATIONAL RADIO ASTRONOMY OBSERVATORY

[x] ELECTRICAL [ ] MECHANICAL BOM # A1325025 REV _____ DATE DSB 770608 PAGE 3 OF 4

| ITEM # | REF DESIG | MANUFACTURER | MFG PART # | DESCRIPTION | TOTAL QUA | |
|---|---|---|---|---|---|---|
| 33 | R21,R27 | | | Resistor 390 Ω, 1/4 W, 5% | 2 | |
| 34 | R32,R30 | | | " 510 Ω " " | 2 | |
| 35 | R28,R29 | | | " 2.4K Ω " " | 2 | |
| 36 | R33 | | | " 1K Ω " " | 1 | |
| 37 | R18,R14 | | | " 120 Ω " " | 2 | |
| 38 | R34,R35 | Helitrim | 63WR | " 10K Pot | 2 | |
| 39 | C17 | Erie | 814-050-651 103M | Red Cap .01 uf Capacitor | 1 | |
| 40 | * | Erie | 8121-050-651 104M | Red Cap .1 uf Capacitor | 12 | |
| 41 | ** | Erie | 8131-050-651 105M | Red Cap 1.0 uf Capacitor | 7 | |
| 42 | C23,C26 | ERIE MONOBLOCK | CK05BX472K | 4700 pf Capacitor | 2 | |
| 43 | C19,C18 | Arco | DM 15101J | 100 pf Capacitor | 2 | |
| 44 | C24 | Arco | DM 15100J | 10 pf Capacitor | 1 | |
| 45 | U6 | Siliconix | DG200 | Fet Switch SPDT | 1 | |
| 46 | | ALPHA | 22 AWG 8021-100 TINNED COPPER | WIRE, BUS | 6in. | |
| 47 | | PENNTUBE PLASTICS CORP. | 0-6591A, 22AWG 1W, NATURAL | TEFLON TUBING | 6 in. | |
| 48 | R23, R24 | | | Resistor, 2.7K, ¼W,5% | 2 | |
| 49 | | | | | | |

* C15, C14, C12, C13, C1, C2, C10, C7, C5, C6, C11, C8

** C3, C9, C20, C21, C23, C22, C16

TABLE 3.2: BOM: A1325025 (CONT.)

BILL OF MATERIAL

NATIONAL RADIO ASTRONOMY OBSERVATORY

[ ] ELECTRICAL [x] MECHANICAL BOM # A13250Z5 REV _____ DATE DSR 770608 PAGE 4 OF 4

| ITEM # | REF DESIG | MANUFACTURER | MFG PART # | DESCRIPTION | TOTAL QUA | |
|---|---|---|---|---|---|---|
| 50 | | Waldon | NW 875 | Flat Washer No. 4 Nylon | 4 | |
| 51 | | | 4-40 x .250 LG | Screw, Pan Head, S.S. | 4 | |
| 52 | R36,37,38,39 | | | Resistor 1k, ¼W | 4 | |
| 53 | C34, C36 ~~C27,28~~ | | | .01 MF | 2 | |
| 54 | ~~C29~~ C35 | ATC (OR EQUIV.) | 100B-750-J-P-500 | 75PF Chip Capacitor | 1 | |
| 55 | L1 | | | 0.1 μH | 1 | |
| | | | | | | |
| | | | | | | |
| | | | | | | |
| | | | | | | |
| | | | | | | |
| | | | | | | |
| | | | | | | |
| | | | | | | |
| | | | | | | |
| | | | | | | |
| | | | | | | |

TABLE 3.2: BOM: A13250Z05 (CONT.)

## 4.0 L7: FRINGE GENERATOR - REVISION B

### 4.1 Modification Description and Reasons

| Description of Modification | Reasons for Modification |
|---|---|
| (a) Replace IC at position 8D on WW board (from type 74196) by Texas Instrument type 74S196 (Schottky TTL) or equivalent. This is a pin compatible replacement. | Existing IC had marginal switching speed, unsatisfactory to guarantee reliable performance. Therefore, replaced by a faster switching speed device. |
| (b) Add filtering components in the DC power supply lines just before they leave the module as shown below: | To filter out 100 kHz and other switching signals leaving out on power supply lines from the module. |

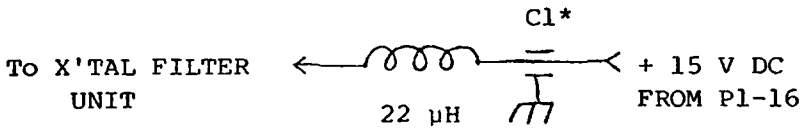


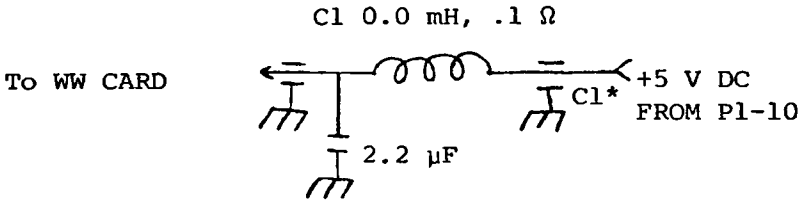


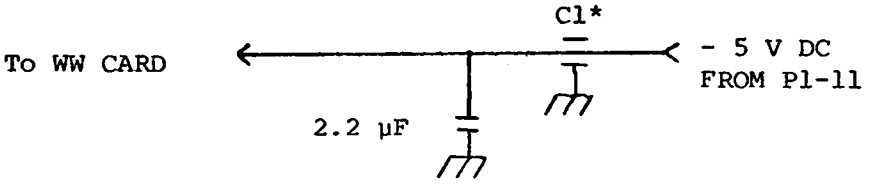


* Existing

C1: 0.1 μF RF1 Feed thru' (Spectrum control type BE001DA104P).

| | |
|---|---|
| (c) Add a 2.2 μF capacitor in 10 MHz mixer crystal filter unit between + 15 V DC line (where the power is connected from the enclosure to the PC Board) and ground. | To filter out 100 kHz going on the power line to the X'-tal filter unit and causing 100 kHz side bands on 10.1 MHz. |

4.2 Drawings Effected

| | |
|---|---|
| (a) Logic diagram for fringe synthesizer card | D13250L2 |
| (b) BOM: Fringe frequency synthesizer wire wrap card | A13250Z2 |
| (c) BOM: 10 MHz mixer and crystal filter unit | A13250Z1 |
| (d) BOM: Module parts and fittings, mechanical & electrical | A13250Z4 |
| (e) Assembly drawings of fringe frequency synthesizer card | D13250P3 |

## 4.3 Input-Output Connections

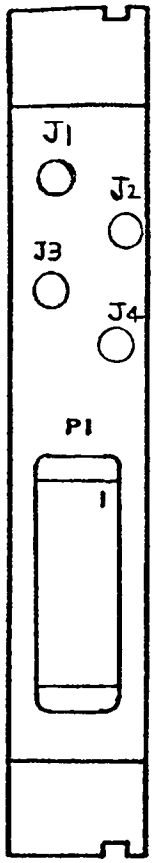


SINGLE WIDE MODULE
( REAR VIEW )

| CONN | FUNCTION |
|---|---|
| J1 | +10±1dBm @ 10.1MHz Output |
| J2 | +7±3dBm @ 50MHz Input |
| J3 | −10±1dBm @ 10MHz Input |
| J4 | |

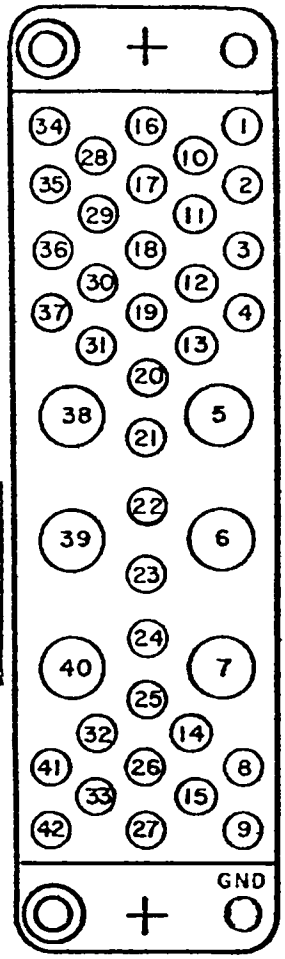


P1 (REAR VIEW)

| P1 | | | | | |
|---|---|---|---|---|---|
| PIN | FUNCTION | WIRE COLOR | PIN | FUNCTION | WIRE COLOR |
| 1 | Phase Switch Control In | | 22 | Enable Sub. MPLX Add 0 | |
| 2 | 19.2Hz Clock Pulse In | | 23 | " " " " 1 | |
| 3 | Output Strobe | | 24 | " " " " 2 | |
| 4 | Input Clock | | 25 | " " " " 3 | |
| 5 | 100 kHz Ref. In | | 26 | " " " " 4 | |
| 6 | | | 27 | " " " " 5 | |
| 7 | | | 28 | ~~−28VDC~~ Signal GRD | ~~GREEN~~ |
| 8 | Output Clock | | 29 | ~~+28VDC~~ Signal GRD | ~~GREY~~ |
| 9 | Input Strobe | | 30 | Enable Sub. MPLX Add. 6 | |
| 10 | +5VDC | ORANGE | 31 | " " " " 7 | |
| 11 | ~~−5VDC~~ -5.2 VDC | BROWN | 32 | Monitor Word Bit 22 | |
| 12 | Serial Input | | 33 | Signal GRD | |
| 13 | Serial Output | | 34 | PWR. GROUND | BLACK |
| 14 | Address Bit MSB | | 35 | Monitor Word Bit 23 | |
| 15 | Address Bit | | 36 | Monitor Word Bit 24 | |
| 16 | +15VDC | RED | 37 | | |
| 17 | −15VDC | YELLOW | 38 | | |
| 18 | Address Bit | | 39 | | |
| 19 | Address Bit (LSB) | | 40 | | |
| 20 | Input Enable (Rate) | | 41 | | |
| 21 | Input Enable (Phase) | | 42 | HIGH QUAL. GROUND | |

* INDICATES A FUNCTION NOT FOUND IN THIS MODULE.

## 5.0 L9: CENTRAL LOCAL OSCILLATOR RECEIVER - REVISION C

### 5.1 Modifications and Reasons - Reference Block Diagram D13230B24

This module has been extensively modified. Main reasons for the modifications are following: Input signal levels at 1200 and 1800 MHz may be grossly different. Therefore, to provide specified levels at 1200 and 1800 MHz, to 5 MHz Receiver and Data Receiver respectively and also at Output from the module, it is necessary that gain at each frequency can be varied independently. Also, external detectors at 1200 and 1800 MHz to provide signal at 5 MHz and Data respectively have been replaced by built-in detectors inside 5 MHz Receiver and Data Receiver boxes. For incorporating detector circuits and to provide front panel monitoring of 1200 and 1800 MHz levels going to the two receivers, the circuits of 5 MHz Receive and Data Receiver have been modified. Also, output of the 5 MHz Receiver has been modified to make it compatible with digital phase monitoring using $f_s$ = 19.2 Hz off-set. Circuit for monitoring level and adjusting gain at 1200 and 1800 MHz have been added.

It has been noticed by Larry D'Addario that presence of IF signals, along with 1200 and 1800 MHz L.O. signals at the input of the L9 module (L9J1), causes compression in the first 19 dB gain amplifier AR1. Modification to correct this problem is under investigation.

### 5.2 Drawings Enclosed

Most of the drawings connected with L9A have been effected. A list of new drawings is enclosed. Following drawings are enclosed in this report:

| | | |
|---|---|---|
| (a) | Block Diagram - Central L.O. Receiver (Fig. 5.1) | D13230B24 |
| (b) | Schematic - 5 MHz Receiver (Fig. 5.2) | C13230S31 |
| (c) | Schematic Data Receiver (Fig. 5.3) | B13230S32 |
| (d) | Schematic Level Indication Circuitry (Fig. 5.4) | B13230S30 |

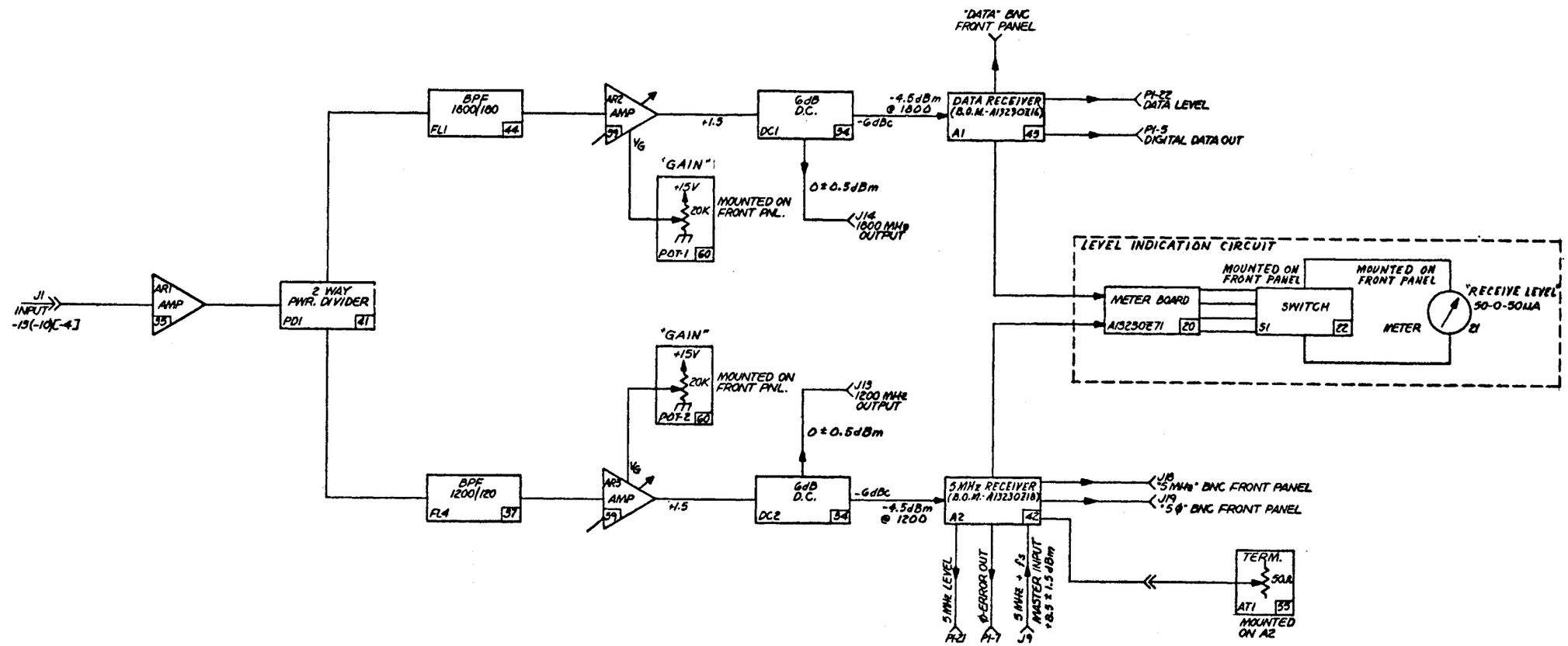


NOTES:
1. P1-POWER CONNECTOR
2. AT1 13 — ITEM NUMBERS PER BOM A13230E07; REF DESIG. PER IEEE NO. 315 & NRAO SPEC.

FIGURE 5.1

| | |
|---|---|
| UNLESS OTHERWISE SPECIFIED DIMENSIONS ARE IN INCHES | VLA PROJECT |
| TOLERANCES: ANGLES ± | "19" CENTRAL L.O. RECEIVER |
| 3 PLACE DECIMALS (.XXX): ± | NATIONAL RADIO ASTRONOMY OBSERVATORY, CHARLOTTESVILLE, VA. 22901 |
| 2 PLACE DECIMALS (.XX): ± | |
| 1 PLACE DECIMALS (.X): ± | |
| MATERIAL: | TITLE: BLOCK DIAGRAM |
| FINISH: | DRAWN BY — DATE 4-10-77 |
| | DESIGNED BY — DATE |
| | APPROVED BY — DATE 3-10-78 |
| NEXT ASSY: A13230E07 | SHEET NUMBER — DRAWING NUMBER D13230B24 — REV. — SCALE |
| USED ON | |

## 5.3 Adjustment Procedure

### 5.3.1 5 MHz RECEIVER - Reference Schematic C13230S31 (Fig. 5.2)

(a) Apply a total of - 4.5 dBm power at 1200 MHz with normal 5 MHz sidebands on it (- 10 dBc at ± 5 MHz from carrier at 1200 MHz) to the receiver input from a 50 Ω source (DC return is required).

(b) Set R22 on U2 to provide about 0.5 V at output of CR1 (P1-21).

(c) Apply a + 8.5 ± 1.5 dBm signal at 5 MHz + $f_s$ (where $f_s$ = 19.2 Hz) from the master local osciallator system to L9J9. Adjust DC offset pot R17 to give symmetric cal 19.2 Hz (symmetrical around 0 DC) as measured at '5ϕ' monitor front panel BNC jack.

### 5.3.2 Data Receiver - Reference Schematic B13230S32 (Fig. 5.3)

(a) Apply a - 4.5 dBm power at 1200 MHz with normal ± 5 MHz - 10 dBc sidebands from a 50 Ω DC return source to the input of Data Receiver.

(b) Tune capacitor C1 in 5 MHz trap to observe minimum 5 MHz at Data Receiver output. It should be less than 50 mV pp.

(c) Apply a - 4.5 dBm power at 1800 MHz with normal ± 500 kHz - 15 dBc sidebands from a 50 Ω DC return source to the input of the receiver. Check that output at Data Monitor BNC jack on front panel is 100 mV peak.

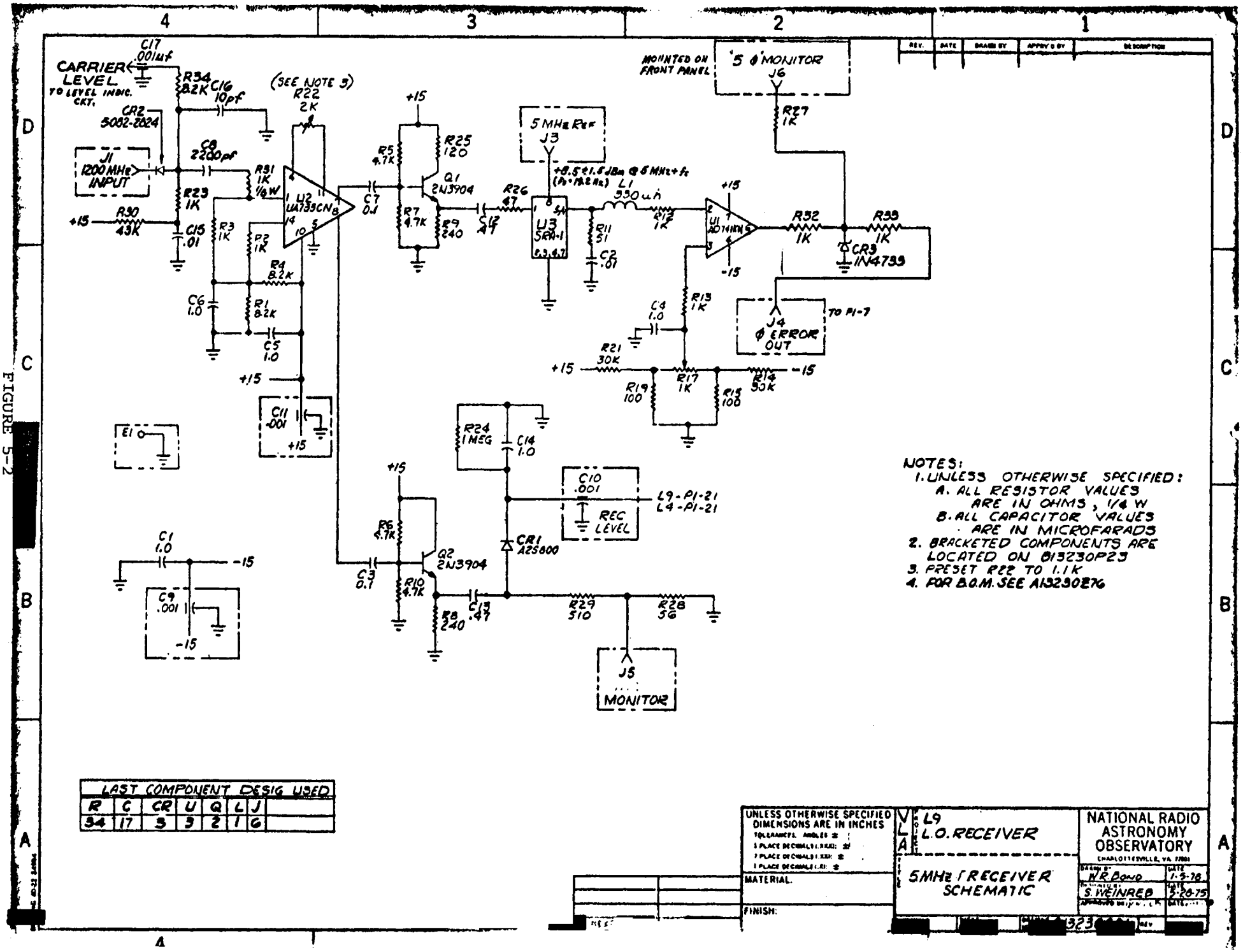


NOTES:
1. UNLESS OTHERWISE SPECIFIED:
   A. ALL RESISTOR VALUES ARE IN OHMS, 1/4 W
   B. ALL CAPACITOR VALUES ARE IN MICROFARADS
2. BRACKETED COMPONENTS ARE LOCATED ON B13230P23
3. PRESET R22 TO 1.1K
4. FOR B.O.M. SEE A13230276

| LAST COMPONENT DESIG USED | | | | | | | |
|---|---|---|---|---|---|---|---|
| R | C | CR | U | Q | L | J | |
| 34 | 17 | 3 | 3 | 2 | 1 | 6 | |

UNLESS OTHERWISE SPECIFIED DIMENSIONS ARE IN INCHES
TOLERANCES: ANGLES ±
3 PLACE DECIMALS (.XXX): ±
2 PLACE DECIMALS (.XX): ±
1 PLACE DECIMALS (.X): ±
MATERIAL:
FINISH:

VLA

L9 L.O. RECEIVER

5MHz RECEIVER SCHEMATIC

NATIONAL RADIO ASTRONOMY OBSERVATORY
CHARLOTTESVILLE, VA 22901

DRAWN BY: H.R. Bond — DATE: 1-5-76
DESIGNED BY: S. WEINREB — DATE: 3-20-75

FIGURE 5-2

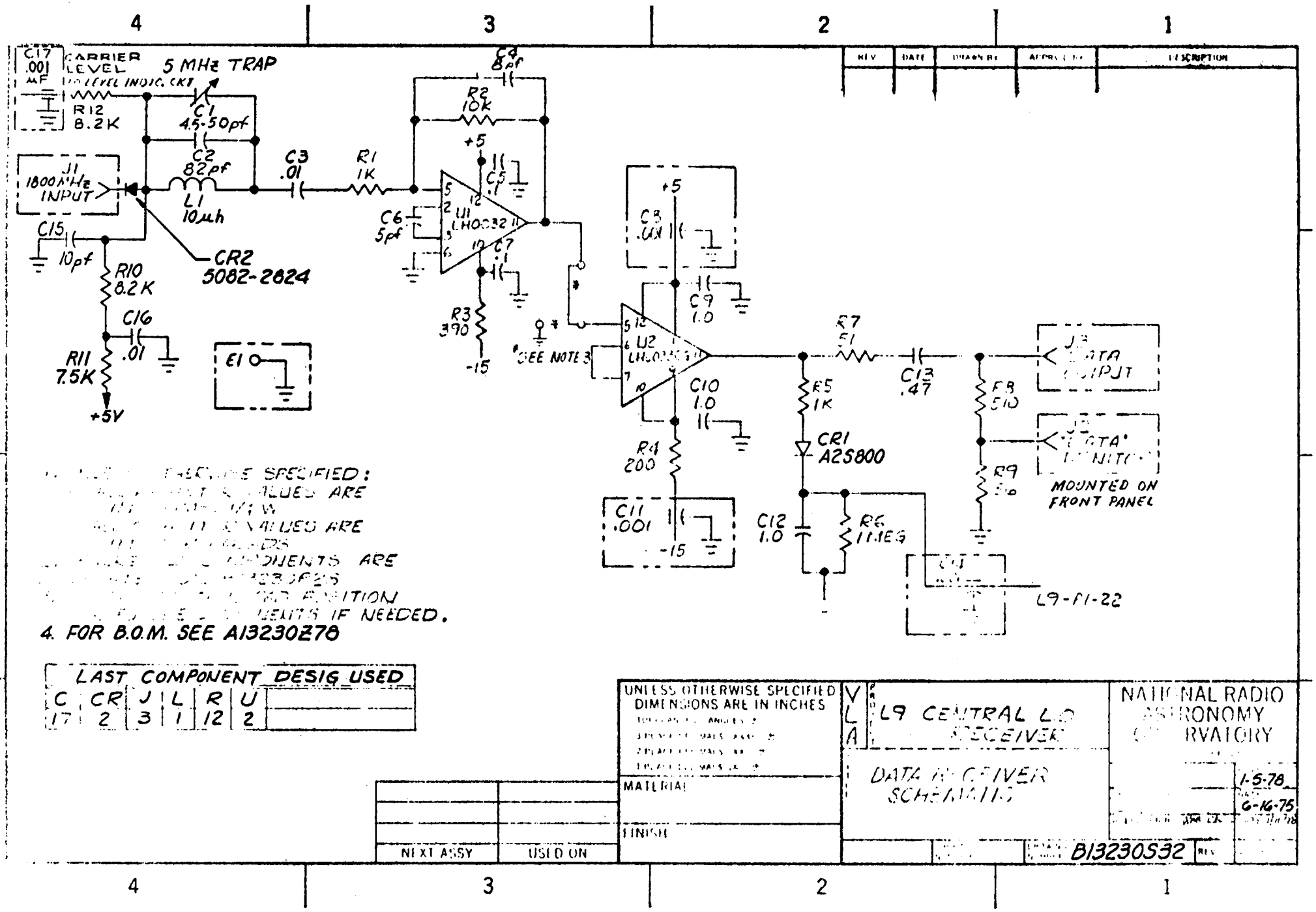
CARRIER LEVEL
5 MHz TRAP
C17 .001 MF
R12 8.2K
C1 4.5-50pf
C2 82pf
L1 10μh
J1 1800MHz INPUT
C15 10pf
R10 8.2K
C16 .01
R11 7.5K
+5V
CR2 5082-2824
E1
C3 .01
R1 1K
C4 8pf
R2 10K
+5
C5 .1
C6 5pf
U1 LH0032
C7 .1
R3 390
-15
SEE NOTE 3
C8 .001
C9 1.0
U2
C10 1.0
R4 200
C11 .001
R5 1K
CR1 A2S800
C12 1.0
R6 11MEG
R7 51
C13 .47
R8 510
R9
MOUNTED ON FRONT PANEL
L9-M1-22
4. FOR B.O.M. SEE A13230278
LAST COMPONENT DESIG USED
C 17 CR 2 J 3 L 1 R 12 U 2
UNLESS OTHERWISE SPECIFIED DIMENSIONS ARE IN INCHES
MATERIAL
FINISH
NEXT ASSY
USED ON
VLA
L9 CENTRAL LO RECEIVER
DATA RECEIVER SCHEMATIC
NATIONAL RADIO ASTRONOMY OBSERVATORY
1-5-78
6-16-75
B13230S32

FIGURE 5-3

5.3.3 Level Monitor Circuit - Reference Block Diagram D13230B24 (Fig. 5.1), Schematic B13230S30 (Fig. 5.4).

(a) Connect nominal (- 4.5 dBm) input signal at the input of 5 MHz Receiver (Data Receiver) with normal modulation on 1200 (1800) MHz carrier.

(b) Adjust potentiometer R1 (R2) on Level Monitor Board with the meter switch connected towards 1200 (1800) MHz side so that the meter reads zero.

(c) Check by varying the input signal to 5 MHz Receiver (Data Receiver) by + 1 dB that the meter reads $\simeq$ + 5 $\mu$ A for the meter switch connected to 1200 (1800) MHz side.

(d) Remove the signal to 5 MHz Receiver (Data Receiver) and normalize connections.

5.3.4 1800 and 1200 MHz Amplifier Gains in the System Reference Block Diagram D13230B24

(a) Connect the module in a normal system.

(b) With the module front panel switch on 1800 (1200) MHz side adjust the front panel potentiometer Pot-1 (Pot-2) to give zero meter reading.

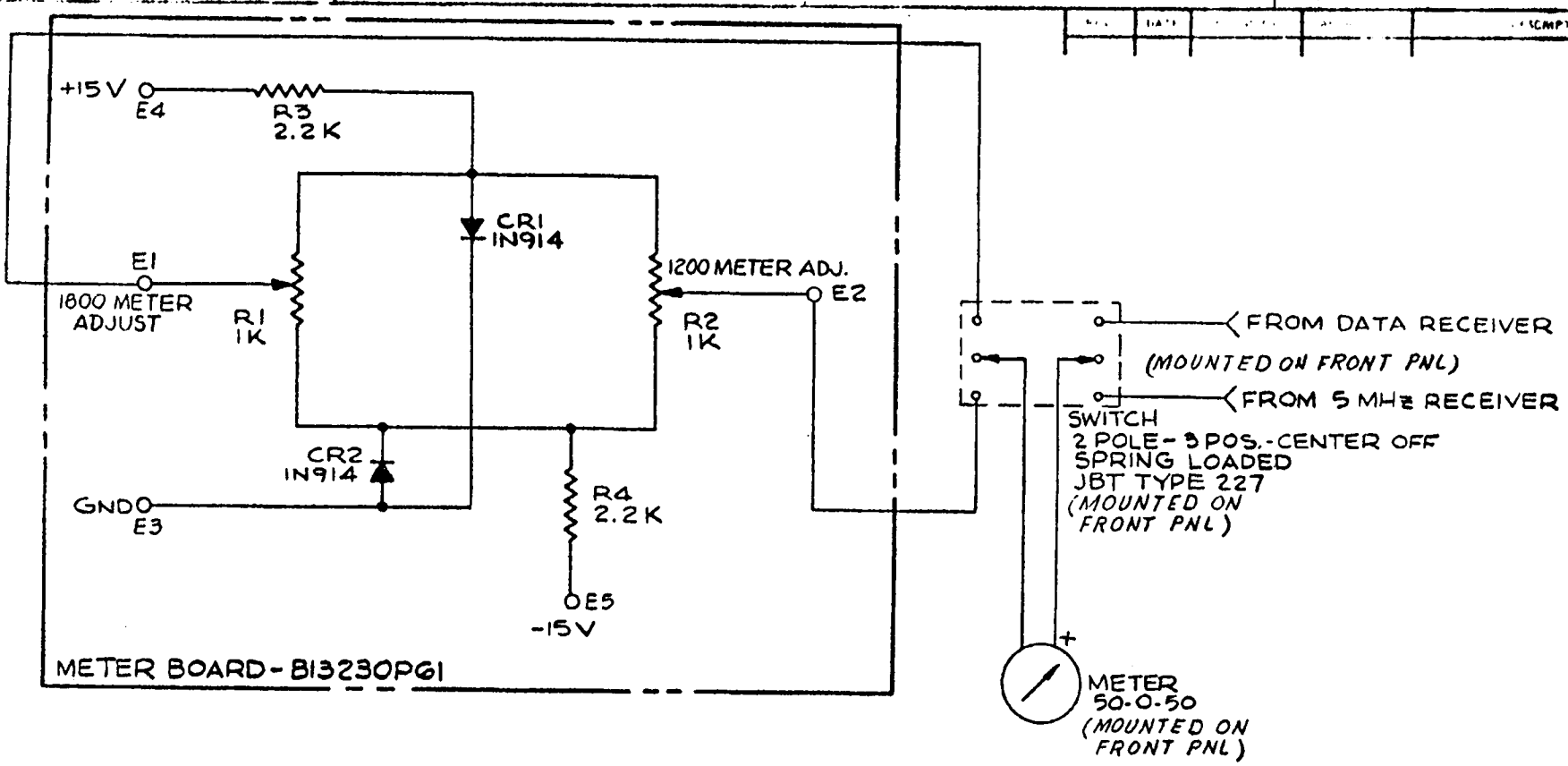


UNLESS OTHERWISE SPECIFIED DIMENSIONS ARE IN INCHES

A13230Z77

VLA

L9

LEVEL INDICATION CKT
SCHEMATIC
DIAGRAM

B13230S30

NATIONAL RADIO ASTRONOMY OBSERVATORY

1-4-78

6-6-77

FIGURE 5-4

## 5.4 Input Output Connections

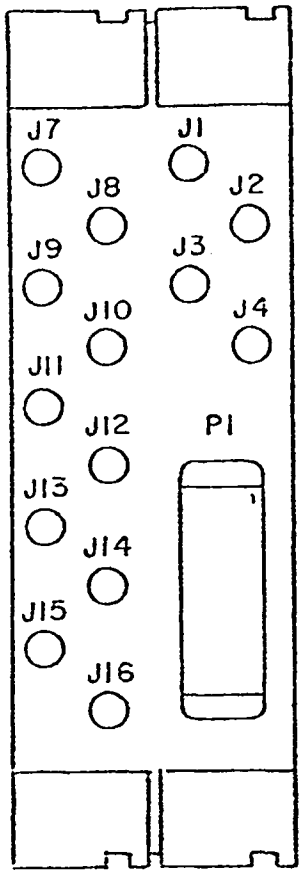


DOUBLE WIDE MODULE
(REAR VIEW)

| CONN | FUNCTION |
|---|---|
| J1 | 1.2 & 1.8 GHz -13 (-10) [-4] Input |
| J2 | |
| J3 | |
| J4 | |
| J7 | |
| J8 | |
| J9 | +8.5 ±1.5 @ 5 MHz + $f_s$ * Input |
| J10 | |
| J11 | |
| J12 | |
| J13 | 0 ± 0.5 dBm @ 1200 MHz Output |
| J14 | 0 ± 0.5 dBm @ 1800 MHz Output |
| J15 | |
| J16 | |

LEGEND: All power levels in dBm
No paranthesis - each L.O. carrier,
paranthesis - total L.O. power,
bracket - total IF & L.O. power,
$f_s$ = 19.2 Hz.

* not connected in the system at present

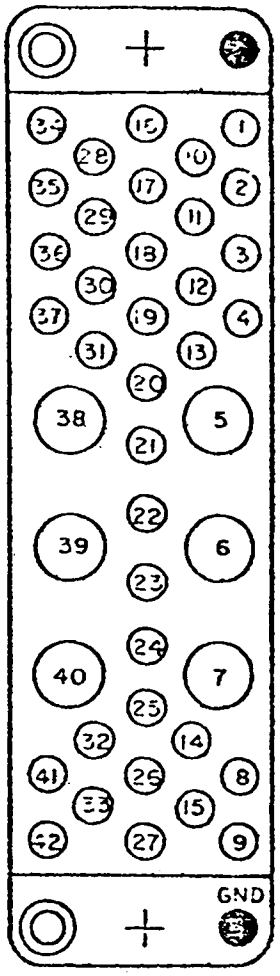


P1 (REAR VIEW

P1

| PIN | FUNCTION | WIRE COLOR | PIN | FUNCTION | WIRE COLOR |
|---|---|---|---|---|---|
| 1 | | | 22 | Received data level | |
| 2 | | | 23 | | |
| 3 | | | 24 | | |
| 4 | | | 25 | | |
| 5 | Data out (TTL) | Co-axial | 26 | | |
| 6 | | | 27 | | |
| 7 | 5 MHz Phase-error | | 28 | −28VDC * | GREEN |
| 8 | | | 29 | +28VDC * | GREY |
| 9 | | | 30 | | |
| 10 | +5VDC | ORANGE | 31 | | |
| 11 | −5VDC * | BROWN | 32 | | |
| 12 | | | 33 | | |
| 13 | High quality ground | | 34 | PWR. GROUND | BLACK |
| 14 | | | 35 | | |
| 15 | | | 36 | | |
| 16 | +15VDC | RED | 37 | | |
| 17 | −15VDC | YELLOW | 38 | | |
| 18 | | | 39 | | |
| 19 | | | 40 | | |
| 20 | | | 41 | | |
| 21 | Received 5 MHz level | | 42 | HIGH QUAL. GROUND | |

* INDICATES A FUNCTION NOT FOUND IN THIS MODULE.

## 5.5 Central L.O. Receiver (L9C) Module List of Drawings, BOM's etc.

| | |
|---|---|
| Block Diagram | D13230B24 |
| Data Receiver Schematic | B13230S03, S32 |
| 5 MHz Receiver Schematic | C13230S04, S31 |
| Level Indication Circuit Schematic | B13230S30 |

**Bills of Materials**

| | |
|---|---|
| Central L.O. Receiver | A13230Z07 |
| Data Receiver | A13230Z16, Z17 |
| Data Receiver PC Board | A13230Z78 |
| 5 MHz Receiver | A13230Z18, Z19 |
| 5 MHz Receiver PC Board | A13230Z76 |
| Level Indication Circuit | A13230Z77 |

**Assembly Drawings**

| | |
|---|---|
| Data Receiver PC Board | B13230P66 |
| Data Receiver Enclosure | B13230P28 |
| 5 MHz Receiver PC Board | B13230P65 |
| 5 MHz Receiver Enclosure | B13230P23 |
| Level Indication Circuit PC Board | B13230P61 |

| Printed Circuit Boards, etc. | Art Work | Silk Screen | Mechanical |
|---|---|---|---|
| Front Panel | | B13230AA24 | B13230M33 |
| Data Receiver PC Board | B13230AB09 | | B13231M15 |
| 5 MHz Receiver PC Board | B13230AB04 | | C13230M55 |
| Level Indication Circuit Board | B13230AB33 | | B13231M19 |
| Wire List (Module) | | | A13230W07 |

Mechanical

| | |
|---|---|
| Central L.O. Receiver | |
| Partition Plate | D13230M61 |
| Guide | B13230M04 |
| Cover, Perforated | C13050M22-1 |
| Right and Left Side Plates | B13050M18 |
| Panel, Rear | C13210M04 |
| Bar Support Top and Bottom-Left | B13230M36 |
| Bar Support Top and Bottom | B13050M23 |
| Data Receiver/5 MHz Receiver End Plate | B13230M89, M90 |
| " " " " " " " | B13230M29, M30 |
| " " " " " " " | B13230M27 |
| " " /Side Panel | B13230M39 |
| 5 MHz Receiver | B13230M54 |
| Turret Terminal | B13230M98 |

## 5.6 Bills of Materials for L9C

# V L A  D A T A  L I S T I N G

MODULE: L09 PROJECT NO. 13240 DRAWING NO.: A13230Z07
DATA SET: CENTRAL LO RECEIVER BOM: CENTRAL LO RECEIVER 0

| MOD-Q/S-Q/M | | DESCR | VALUE | MFG. PART NO. | MANUFACTURER | ITEM# | BOM# | DESCRIPTION | | COST |
|---|---|---|---|---|---|---|---|---|---|---|
| L09 | | NST | | A13230Z07 | NRAO | 1 | A13230Z07 | CENTRAL LO RECEIVER | 0 | 0.00 |
| L09 | 1 | MPM | | D13230M61 | NRAO | 2 | A13230Z07 | PARTITION PLATE | M | 31.03 |
| L09 | 4 | MPM | | B13050M04 | NRAO | 3 | A13230Z07 | GUIDE | Z | 0.20 |
| L09 | 2 | MPM | | C13050M22-1 | NRAO | 4 | A13230Z07 | COVER,PERFORATED | K | 1.38 |
| L09 | 2 | MPM | | B13050M18 | NRAO | 5 | A13230Z07 | RIGHT & LEFT SIDE PLATES | H | 8.78 |
| L09 | 1 | MPM | | B13230M33 | NRAO | 6 | A13230Z07 | PANEL, FRONT | A | 17.96 |
| L09 | 4 | H | | 47-10-204-10 | SOUTHCO | 7 | A13230Z07 | FASTNER,CAPTIVE | | 0.67 |
| L09 | 1 | MPM | | C13210M04 | NRAO | 8 | A13230Z07 | PANEL, REAR | E | 15.93 |
| L09 | 2 | MPM | | B13230M36 | NRAO | 9 | A13230Z07 | BAR SUP TOP & BTM LEFT | G | 16.91 |
| L09 | 2 | MPM | | B13050M23 | NRAO | 10 | A13230Z07 | BAR, SUP. TOP & BOTTOM | G | 13.46 |
| L09 | 4 | H | | PHSS 6-32 X 0.625 | HW | 11 | A13230Z07 | PAN HEAD SLOTTED SS | | 0.02 |
| L09 | 4 | H | | PHSS 6-32 X 0.875 | HW | 12 | A13230Z07 | PAN HEAD SLOTTED SS | | 0.02 |
| L09 | 2 | H | | HSHS 6-32 X 0.250 | HW | 13 | A13230Z07 | HEX-SOCKET HD SLOTTED SS | | 0.02 |
| L09 | 14 | H | | FHSS 6-32 X 0.250 | HW | 14 | A13230Z07 | FLAT HEAD SLOTTED SS SCREW | | 0.02 |
| L09 | 4 | H | | FHSS 6-32 X 0.375 | HW | 15 | A13230Z07 | FLAT HEAD SLOTTED SS SCREW | | 0.02 |
| L09 | 3 | H | | PHSS 2-56 X 0.500 | HW | 16 | A13230Z07 | PAN HEAD SLOTTED SS | | 0.02 |
| L09 | 18 | H | | PHSS 4-40 X 0.250 | HW | 17 | A13230Z07 | PAN HEAD SLOTTED SS | | 0.02 |
| L09 | 8 | H | | PHSS 6-32 X 0.250 | HW | 18 | A13230Z07 | PAN HEAD SLOTTED SS | | 0.02 |
| L09 | 2 | H | | PHSS 2-56 X 0.875 | HW | 19 | A13230Z07 | PAN HEAD SLOTTED SS | | 0.02 |
| L09 | 01 | NSA | | A13230Z77 | NRAO | 20 | A13230Z07 | METER BOARD PCB ASSY | 0 | 0.00 |
| L09 | 01 | M | 50.0 | 111-5622750 | WESTON | 21 | A13230Z07 | 50-0-50 UADC VERT MT | | 18.00 |
| L09 | 01 | S 01 | | 227 | JBT | 22 | A13230Z07 | SWITCH,TOGGLE 2 POLE | | 6.00 |
| L09 | 02 | H | | 1702 | KEYSTONE | 23 | A13230Z07 | SHAFT LOCK | | 0.35 |
| L09 | 01 | | | B13230AA24 | NRAO | 24 | A13230Z07 | FRONT PANEL SILKSCREEN | 5 | 0.00 |
| L09 | 2 | DC 01 | | 20063-6 | OMNI-SPECTRA | 34 | A13230Z07 | CPLR 6DB 1-2GHZ | | 107.00 |
| L09 | | DC 02 | | 20063-6 | OMNI-SPECTRA | 34 | A13230Z07 | CPLR 6DB 1-2GHZ | | 107.00 |
| L09 | 01 | AR 01 | | 6203-313 | WATKINS JOHN | 35 | A13230Z07 | SPEC A13230N4 | | 282.00 |
| L09 | 13 | W | | UT-141A | UNIFORM TUBES | 36 | A13230Z07 | CABLE,RF SEMIRIGID | | 0.45 |
| L09 | 1 | FL 04 | | 4B120-1200/120-0 | K&L MICROWAVE | 37 | A13230Z07 | FILTER,TUBULAR BP | | 45.00 |
| L09 | 2 | MPP | | M12-A | K&L MICROWAVE | 37 | A13230Z07 | MOUNTING CLIP | | 0.05 |
| L09 | 4 | J 13 | | OMO-3043-75 | OMNI-SPECTRA | 38 | A13230Z07 | JACK,BLKHD RP MOUNT 141SR | | 1.50 |
| L09 | | J 14 | | OMO-3043-75 | OMNI-SPECTRA | 38 | A13230Z07 | JACK,BLKHD RP MOUNT 141SR | | 1.50 |
| L09 | | J 09 | | OMO-3043-75 | OMNI-SPECTRA | 38 | A13230Z07 | JACK,BLKHD RP MOUNT 141SR | | 1.50 |
| L09 | | J 01 | | OMO-3043-75 | OMNI-SPECTRA | 38 | A13230Z07 | JACK,BLKHD RP MOUNT 141SR | | 1.50 |
| L09 | 1 | P | | 202394-2 | AMP SPEC IND | 39 | A13230Z07 | HOOD,PIN(42 AND 50 BLOCK) | | 0.87 |
| L09 | 1 | P | | 204186-5 | AMP SPEC IND | 40 | A13230Z07 | BLOCK,PIN 42 MIXED | | 1.68 |
| L09 | 1 | PD 01 | | 20493 | OMNI-SPECTRA | 41 | A13230Z07 | POWER DVDR,2 WAY,1-2GHZ | | 126.00 |
| L09 | 1 | NSA | | A13230Z18 | NRAO | 42 | A13230Z07 | 5 MHZ PHASE DETECTOR | 0 | 0.00 |
| L09 | 1 | NSA | | A13230Z16 | NRAO | 43 | A13230Z07 | DATA LINE DRIVER AMP | 0 | 0.00 |
| L09 | 1 | FL 01 | | 4B120-1800/180-0 | K&L MICROWAVE | 44 | A13230Z07 | FILTER,TUBULAR BP | | 45.00 |
| L09 | 05 | P | | OSM-531-3 | OMNI-SPECTRA | 45 | A13230Z07 | PLUG RT ANGL RG188 | | 3.57 |
| L09 | 2 | P | | OSM-218 | OMNI-SPECTRA | 46 | A13230Z07 | ADAPTER,STRGHT PLUG/PLUG | | 4.56 |
| L09 | 16 | P | | OSM-201-1A | OMNI-SPECTRA | 47 | A13230Z07 | CONNECTOR,PLUG 141SR | | 0.85 |
| L09 | 02 | P | | 201143-5 | AMP SPEC IND | 49 | A13230Z07 | COAX PIN | | 2.48 |
| L09 | 07 | P | | 204188-1 | AMP SPEC IND | 50 | A13230Z07 | CONTACT, PIN | | 0.23 |
| L09 | 02 | P | | 203964-6 | AMP SPEC IND | 51 | A13230Z07 | GUIDE SOCKET | | 0.21 |
| L09 | 01 | P | | 200933-4 | AMP SPEC IND | 52 | A13230Z07 | GUIDE PIN | | 0.23 |
| L09 | 01 | P | | 202514-1 | AMP SPEC IND | 53 | A13230Z07 | GROUND GUIDE PIN | | 0.42 |
| L09 | 01 | P | | OSM-511-3 | OMNI-SPECTRA | 54 | A13230Z07 | CONNECTOR,PLUG RG188 | | 1.96 |
| L09 | 01 | AT 01 | | 20020P-1 | OMNI-SPECTRA | 55 | A13230Z07 | TERMINATION | | 8.26 |
| L09 | 03 | J 17 | | KC-19-153 | KINGS | 56 | A13230Z07 | CONNECTOR, PAL BNC | | 2.35 |
| L09 | | J 19 | | KC-19-153 | KINGS | 56 | A13230Z07 | CONNECTOR, PAL BNC | | 2.35 |

| MOD-C/S-Q/M | DESCR | VALUE | MFG. PART NO. | MANUFACTURER | ITEM# | BOM# | DESCRIPTION | | COST |
|---|---|---|---|---|---|---|---|---|---|
| L09 | J 18 | | KC-19-153 | KINGS | 56 | A13230Z07 | CONNECTOR, PNL BNC | | 2.35 |
| L09 | DSH | | D13230B24 | NRAO | 57 | A13230Z07 | BLCCK DIAGRAM | 7 | 0.00 |
| L09 | DWW | | A13230W07 | NRAO | 58 | A13230Z07 | CENTRAL LC RECEIVER | 8 | 0.00 |
| L09 | AR 03 | | 6203-7 | WATKINS JCHN | 59 | A13230Z07 | SPEC A13230N2 | | 247.00 |
| L09 2 | AR 02 | | 6203-7 | WATKINS JOHN | 59 | A13230Z07 | SPEC A13230N2 | | 247.00 |
| L09 02 | R 01 | 20.0 K | 534-20K | SPECTROL | 60 | A13230Z07 | 10 TURN POT | | 6.00 |
| L09 | R 02 | 20.0 K | 534-20K | SPECTROL | 60 | A13230Z07 | 10 TURN POT | | 6.00 |

*** TOTAL COST= 1473.32 ***

# V L A  D A T A  L I S T I N G

MODULE: L09 PROJECT NO. 13240 DRAWING NO.: A13230Z16
DATA SET: CENTRAL LO RECEIVER BOM: DATA LINE DRIVER AMP 0

| MOD-C/S-Q/M | DESCR | VALUE | MFG. PART NO. | MANUFACTURER | ITEM# | BOM# | DESCRIPTION | COST |
|---|---|---|---|---|---|---|---|---|
| L09 | NSA | | A13230Z16 | NRAO | 1 | A13230Z16 | DATA LINE DRIVER AMP 0 | 0.00 |
| L09 1 | MPN | | B13230M89 | NRAO | 2 | A13230Z16 | RCVR DATA AMP END PANEL J | 0.00 |
| L09 1 | MPN | | B13230M30 | NRAO | 3 | A13230Z16 | RECEIVER DATA AMPLIFIER J | 3.71 |
| L09 1 | MPN | | B13230M39 | NRAO | 4 | A13230Z16 | RECVR DATA AMP SIDE PANELJ | 0.00 |
| L09 1 | MPN | | B13230M27 | NRAO | 5 | A13230Z16 | RECEIVER DATA AMPLIFIER J | 2.73 |
| L09 8 | H | | PHSS 4-40 X 0.500 | HW | 6 | A13230Z16 | PAN HEAD SLOTTED SS | 0.02 |
| L09 04 | H | | FHSS 4-40 X 0.375 | HW | 7 | A13230Z16 | FLAT HEAD SLOTTED SS SCREW | 0.02 |
| L09 1 | MPN | | B13230M29 | NRAO | 8 | A13230Z16 | RECEIVER DATA AMPLIFIER J | 6.72 |
| L09 1 | MPN | | B13230M90 | NRAO | 9 | A13230Z16 | RCVR DATA AMP END PANEL J | 0.00 |
| L09 01 | DSA | | B13230P28 | NRAO | 10 | A13230Z16 | RCVR DAT AMPLIFIER ASSY 1 | 0.00 |
| L09 04 | H | | PHSS 4-40 X 0.250 | HW | 12 | A13230Z16 | PAN HEAD SLOTTED SS | 0.02 |
| L09 1 | NSB | | A13230Z17 | NRAO | 16 | A13230Z16 | DATA LINE DRIVER AMP 0 | 0.00 |
| L09 | J 02 | | OSM-211 | OMNI-SPECTRA | 17 | A13230Z16 | JACK BLKHD FDTHRU | 2.15 |
| L09 | J 03 | | OSM-211 | OMNI-SPECTRA | 17 | A13230Z16 | JACK BLKHD FDTHRU | 2.15 |
| L09 3 | J 01 | | OSM-211 | OMNI-SPECTRA | 17 | A13230Z16 | JACK BLKHD FDTHRU | 2.15 |
| L09 04 | C 08 | 0.001UF | FB3B10F102W | SPEC CONTROL | 18 | A13230Z16 | CAPACITOR,FEEDTHRU SCREW MT | 0.66 |
| L09 01 | C 17 | 0.001UF | FB3B10F102W | SPEC CONTROL | 18 | A13230Z16 | CAPACITOR,FEEDTHRU SCREW MT | 0.66 |
| L09 | C 11 | 0.001UF | FB3B10F102W | SPEC CONTROL | 18 | A13230Z16 | CAPACITOR,FEEDTHRU SCREW MT | 0.66 |
| L09 | C 14 | 0.001UF | FB3B10F102W | SPEC CONTROL | 18 | A13230Z16 | CAPACITOR,FEEDTHRU SCREW MT | 0.66 |
| L09 1 | E 01 | | 1587-1 | KEYSTONE | 19 | A13230Z16 | TERMINAL,TURRET .125 4-40THD | 0.09 |
| L09 | E 01 | | B13230M98 | NRAO | 19 | A13230Z16 | TERMINAL, TURRET MCD N | 0.00 |
| L09 | DSH | | B13230S03 | NRAO | 20 | A13230Z16 | RCVR DATA AMP SCHEMATIC 2 | 0.00 |

*** TOTAL COST= 23.32 ***

# V L A  D A T A  L I S T I N G

MODULE: L09 PROJECT NO. 13240 DRAWING NO.: A13230Z18
DATA SET: CENTRAL LO RECEIVER BOM: 5 MHZ PHASE DETECTOR 0

| MOD-Q/S-Q/M | | DESCR | VALUE | MFG. PART NO. | MANUFACTURER | ITEM# | BOM# | DESCRIPTION | COST |
|---|---|---|---|---|---|---|---|---|---|
| L09 | | NSA | | A13230Z18 | NRAO | 1 | A13230Z18 | 5 MHZ PHASE DETECTOR 0 | 0.00 |
| L09 | 1 | MPN | | B13230M89 | NRAO | 2 | A13230Z18 | RCVR DATA AMP END PANEL J | 0.00 |
| L09 | 1 | MPN | | B13230M30 | NRAO | 3 | A13230Z18 | RECEIVER DATA AMPLIFIER J | 3.71 |
| L09 | 1 | MPN | | B13230M54 | NRAO | 4 | A13230Z18 | 5MHZ PHASE DETECTOR J | 0.00 |
| L09 | 1 | MPN | | B13230M27 | NRAO | 5 | A13230Z18 | RECEIVER DATA AMPLIFIER J | 2.73 |
| L09 | 8 | H | | PHSS 4-40 X 0.500 | HW | 6 | A13230Z18 | PAN HEAD SLOTTED SS | 0.02 |
| L09 | 04 | H | | FHSS 4-40 X 0.375 | HW | 7 | A13230Z18 | FLAT HEAD SLOTTED SS SCREW | 0.02 |
| L09 | 1 | MPN | | B13230M90 | NRAO | 8 | A13230Z18 | RCVR DATA AMP END PANEL J | 0.00 |
| L09 | 01 | MPN | | B13230M29 | NRAO | 09 | A13230Z18 | RECEIVER DATA AMPLIFIER J | 6.72 |
| L09 | 01 | DSA | | B13230P23 | NRAO | 10 | A13230Z18 | 5MHZ PHASE DET ENCL 1 | 0.00 |
| L09 | 04 | H | | PHSS 4-40 X 0.250 | HW | 12 | A13230Z18 | PAN HEAD SLOTTED SS | 0.02 |
| L09 | | C 11 | 0.001UF | FB3B10F102W | SPEC CONTROL | 16 | A13230Z18 | CAPACITOR,FEEDTHRU SCREW MT | 0.66 |
| L09 | 04 | C 09 | 0.001UF | FB3B10F102W | SPEC CONTROL | 16 | A13230Z18 | CAPACITOR,FEEDTHRU SCREW MT | 0.66 |
| L09 | 01 | C 17 | 0.001UF | FB3B10F102W | SPEC CONTROL | 16 | A13230Z18 | CAPACITOR,FEEDTHRU SCREW MT | 0.66 |
| L09 | | C 10 | 0.001UF | FB3B10F102W | SPEC CONTROL | 16 | A13230Z18 | CAPACITOR,FEEDTHRU SCREW MT | 0.66 |
| L09 | 1 | E 01 | | 1587-1 | KEYSTONE | 17 | A13230Z18 | TERMINAL,TURRET .125 4-40THD | 0.09 |
| L09 | | E 01 | | B13230M98 | NRAO | 17 | A13230Z18 | TERMINAL, TURRET MOD N | 0.00 |
| L09 | | J 03 | | OSM-211 | OMNI-SPECTRA | 18 | A13230Z18 | JACK BLKHD FDTHRU | 2.15 |
| L09 | | J 04 | | OSM-211 | OMNI-SPECTRA | 18 | A13230Z18 | JACK BLKHD FDTHRU | 2.15 |
| L09 | | J 05 | | OSM-211 | OMNI-SPECTRA | 18 | A13230Z18 | JACK BLKHD FDTHRU | 2.15 |
| L09 | | J 06 | | OSM-211 | OMNI-SPECTRA | 18 | A13230Z18 | JACK BLKHD FDTHRU | 2.15 |
| L09 | 6 | J 01 | | OSM-211 | OMNI-SPECTRA | 18 | A13230Z18 | JACK BLKHD FDTHRU | 2.15 |
| L09 | 1 | NSB | | A13230Z19 | NRAO | 19 | A13230Z18 | 5 MHZ PHASE DETECTOR 0 | 0.00 |
| L09 | 1 | DSH | | C13230S04 | NRAO | 21 | A13230Z18 | 5MHZ DETECTOR SCHEMATIC 2 | 0.00 |

*** TOTAL COST= 29.77 ***

# V L A  D A T A  L I S T I N G

MODULE: L09 PROJECT NO. 13240 DRAWING NO.: A13230Z76
DATA SET: CENTRAL LO RECEIVER BOM: 5 MHZ PHASE DET PCB ASSY 0

| MOD-Q/S-Q/M | | DESCR | VALUE | | MFG. PART NO. | MANUFACTURER | ITEM# | BOM# | DESCRIPTION | COST |
|---|---|---|---|---|---|---|---|---|---|---|
| L09 | | NSA | | | A13230Z76 | NRAO | 01 | A13230Z76 | 5 MHZ PHASE DET PCB ASSY 0 | 0.00 |
| L09 | 01 | EPCD | | | C13230M55 | NRAO | 02 | A13230Z76 | 5 MHZ PHASE DETECTOR 6 | 3.65 |
| L09 | | R 32 | 1.0 | K | RCR07 102-5S | | 03 | A13230Z76 | RESISTOR 1/4W | 0.06 |
| L09 | | R 33 | 1.0 | K | RCR07 102-5S | | 03 | A13230Z76 | RESISTOR 1/4W | 0.06 |
| L09 | | R 27 | 1.0 | K | RCR07 102-5S | | 03 | A13230Z76 | RESISTOR 1/4W | 0.06 |
| L09 | | R 23 | 1.0 | K | RCR07 102-5S | | 03 | A13230Z76 | RESISTOR 1/4W | 0.06 |
| L09 | | R 13 | 1.0 | K | RCR07 102-5S | | 03 | A13230Z76 | RESISTOR 1/4W | 0.06 |
| L09 | | R 03 | 1.0 | K | RCR07 102-5S | | 03 | A13230Z76 | RESISTOR 1/4W | 0.06 |
| L09 | | R 02 | 1.0 | K | RCR07 102-5S | | 03 | A13230Z76 | RESISTOR 1/4W | 0.06 |
| L09 | 08 | R 12 | 1.0 | K | RCR07 102-5S | | 03 | A13230Z76 | RESISTOR 1/4W | 0.06 |
| L09 | 04 | R 05 | 4.7 | K | RCR07 472-5S | | 04 | A13230Z76 | RESISTOR 1/4W | 0.06 |
| L09 | | R 10 | 4.7 | K | RCR07 472-5S | | 04 | A13230Z76 | RESISTOR 1/4W | 0.06 |
| L09 | | R 06 | 4.7 | K | RCR07 472-5S | | 04 | A13230Z76 | RESISTOR 1/4W | 0.06 |
| L09 | | R 07 | 4.7 | K | RCR07 472-5S | | 04 | A13230Z76 | RESISTOR 1/4W | 0.06 |
| L09 | 1 | R 20 | 510.0 | | RCR07 511-5S | | 05 | A13230Z76 | RESISTOR 1/4W | 0.06 |
| L09 | 02 | R 09 | 240.0 | | RCR07 241-5S | | 06 | A13230Z76 | RESISTOR 1/4W | 0.06 |
| L09 | | R 08 | 240.0 | | RCR07 241-5S | | 06 | A13230Z76 | RESISTOR 1/4W | 0.06 |
| L09 | 01 | R 11 | 51.0 | | RCR07 510-5S | | 07 | A13230Z76 | RESISTOR 1/4W | 0.06 |
| L09 | 02 | R 14 | 30.0 | K | RCR07 303-5S | | 08 | A13230Z76 | RESISTOR 1/4W | 0.06 |
| L09 | | R 21 | 30.0 | K | RCR07 303-5S | | 08 | A13230Z76 | RESISTOR 1/4W | 0.06 |
| L09 | | R 19 | 100.0 | | RCR07 101-5S | | 09 | A13230Z76 | RESISTOR 1/4W | 0.06 |
| L09 | 02 | R 15 | 100.0 | | RCR07 101-5S | | 09 | A13230Z76 | RESISTOR 1/4W | 0.06 |
| L09 | 01 | R 17 | 1.0 | K | 3339P-1-102 | BOURNS | 11 | A13230Z76 | POT,CERMET,4TURN,+-10% | 2.50 |
| L09 | 01 | R 26 | 47.0 | | RCR07 470-5S | | 12 | A13230Z76 | RESISTOR 1/4W | 0.06 |
| L09 | 01 | R 22 | 2.0 | K | 3339P-1-202 | BOURNS | 13 | A13230Z76 | POT.CERMET,4TURN,+-10% | 1.98 |
| L09 | 01 | R 24 | 1.0 | M | RCR07 105-5S | | 14 | A13230Z76 | RESISTOR 1/4W | 0.06 |
| L09 | 01 | R 25 | 120.0 | | RCR07 121-5S | | 15 | A13230Z76 | RESISTOR 1/4W | 0.06 |
| L09 | 01 | R 28 | 56.0 | | RCR07 560-5S | | 16 | A13230Z76 | RESISTOR 1/4W | 0.06 |
| L09 | 05 | C 01 | 1.0 | UF | 8131-050-651-105M | ERIE | 17 | A13230Z76 | CAPACITOR,MONOLYTHIC 50VDC | 1.23 |
| L09 | | C 04 | 1.0 | UF | 8131-050-651-105M | ERIE | 17 | A13230Z76 | CAPACITOR,MONOLYTHIC 50VDC | 1.23 |
| L09 | | C 14 | 1.0 | UF | 8131-050-651-105M | ERIE | 17 | A13230Z76 | CAPACITOR,MONOLYTHIC 50VDC | 1.23 |
| L09 | | C 05 | 1.0 | UF | 8131-050-651-105M | ERIE | 17 | A13230Z76 | CAPACITOR,MONOLYTHIC 50VDC | 1.23 |
| L09 | | C 06 | 1.0 | UF | 8131-050-651-105M | ERIE | 17 | A13230Z76 | CAPACITOR,MONOLYTHIC 50VDC | 1.23 |
| L09 | | C 15 | 0.01 | UF | 8121-050-651-103M | ERIE | 18 | A13230Z76 | 0.01UF,50WVDC,CAP.(RED CAP) | .39 |
| L09 | 01 | C 02 | 0.01 | UF | 8121-050-651-103M | ERIE | 18 | A13230Z76 | 0.01UF,50WVDC,CAP.(RED CAP) | .39 |
| L09 | 02 | C 03 | 0.1 | UF | 8131-050-651-104M | ERIE | 19 | A13230Z76 | CAPACITOR,MONOLYTHIC 50V | 0.19 |
| L09 | | C 07 | 0.1 | UF | 8131-050-651-104M | ERIE | 19 | A13230Z76 | CAPACITOR,MONOLYTHIC 50V | 0.19 |
| L09 | 01 | C 08 | 2200.0 | PF | 8111-050-651-222M | ERIE | 20 | A13230Z76 | CAPACITOR,MONOLYTHIC 50V | 0.11 |
| L09 | | C 13 | 0.47 | UF | 8131-050-651-474M | ERIE | 21 | A13230Z76 | CAPACITOR,MONOLYTHIC 50VDC | 0.35 |
| L09 | 02 | C 12 | 0.47 | UF | 8131-050-651-474M | ERIE | 21 | A13230Z76 | CAPACITOR,MONOLYTHIC 50VDC | 0.35 |
| L09 | 01 | CR 01 | | | A25800 | AERTECH | 22 | A13230Z76 | DIODE,SHOTTKEY | 1.05 |
| L09 | 01 | U 01 | | | AD741KN | ANALOG DEV | 23 | A13230Z76 | OP AMP,LO COST DIP | 2.50 |
| L09 | 01 | U 02 | | | UA733CA | SIGNETICS | 24 | A13230Z76 | AMPLIFIER,DIFF VIDEO | 1.00 |
| L09 | 01 | U 03 | | | SRA-1 | MINI CKT LABS | 25 | A13230Z76 | MIXER,DBL BAL | 9.45 |
| L09 | | Q 02 | | | 2N3904 | MOTOROLA | 26 | A13230Z76 | TRANSISTOR,AMPLIFIER NPN | 0.12 |
| L09 | 02 | Q 01 | | | 2N3904 | MOTOROLA | 26 | A13230Z76 | TRANSISTOR,AMPLIFIER NPN | 0.12 |
| L09 | 01 | L 01 | 330.0 | UH | 9230-80 | MILLER | 27 | A13230Z76 | CHOKE,RF MICRO MINATURE | 0.85 |
| L09 | 01 | X | | | ICN-143-S3 | ROB NUGENT | 28 | A13230Z76 | SOCKET,14 PIN DIL | 0.27 |
| L09 | 01 | X | | | ICN-083-S3 | ROB NUGENT | 29 | A13230Z76 | SOCKET,8 PIN DIL | 0.25 |
| L09 | 02 | X | | | 3-LPS-B | CINCH | 30 | A13230Z76 | SOCKET,TRANSISTOR TO-5,TO-18 | 0.12 |
| L09 | | DSH | | | C13230S31 | NRAO | 31 | A13230Z76 | 5MHZ RCVR & PH DET SCHEM 2 | 0.00 |
| L09 | | EPCA | | | D132304B04 | NRAO | 32 | A13230Z76 | 5 MHZ Q DETECTOR 4 | 0.00 |

| MOD-Q/S-Q/M | | DESCR | VALUE | | MFG. PART NO. | MANUFACTURER | ITEM# | BOM# | DESCRIPTION | COST |
|---|---|---|---|---|---|---|---|---|---|---|
| L09 | | R 34 | 8.2 | K | RCR07 822-5S | | 33 | A13230Z76 | RESISTOR 1/4W | 0.06 |
| L09 | | R 04 | 8.2 | K | RCR07 822-5S | | 33 | A13230Z76 | RESISTOR 1/4W | 0.06 |
| L09 | 03 | R 01 | 8.2 | K | RCR07 822-5S | | 33 | A13230Z76 | RESISTOR 1/4W | 0.06 |
| L09 | 01 | FPCB | | | B13230P65 | NRAO | 34 | A13230Z76 | 5 MHZ PHASE DET PCB ASSY 1 | 0.00 |
| L09 | | R 31 | 1.0 | K | RCR05 102-5S | | 39 | A13230Z76 | RESISTOR 1/8W | 0.22 |
| L09 | 01 | R 30 | 43.0 | K | RCR07 433-5S | | 40 | A13230Z76 | RESISTOR 1/4W | 0.06 |
| L09 | 01 | C 16 | 10.0 | PF | CM04CD100J03 | ARCO | 41 | A13230Z76 | CAPACITOR MICA 500WVDC | 0.11 |
| L09 | 01 | CR 02 | | | 5082-2824 | HEWLETT PACK | 42 | A13230Z76 | DIODE,HOT CARRIER | 7.90 |
| L09 | 01 | CR 03 | | | 1N4733 | MOTOROLA | 44 | A13230Z76 | DIODE,ZENER 5.1V 1 WATT | 0.73 |

*** TOTAL COST= 42.13 ***

# V L A  D A T A  L I S T I N G

MODULE: L09
DATA SET: CENTRAL LO RECEIVER

PROJECT NO. 13240

DRAWING NO.: A13230Z77
BOM: METER BOARD PCB ASSY C

| MOD-Q/S-Q/M | | DESCR | VALUE | MFG. PART NO. | MANUFACTURER | ITEM# | BOM# | DESCRIPTION | | COST |
|---|---|---|---|---|---|---|---|---|---|---|
| L09 | | NSA | | A13230Z77 | NRAO | 1 | A13230Z77 | METER BOARD PCB ASSY | C | 0.00 |
| L09 | 01 | EPCP | | B13230P61 | NRAO | 02 | A13230Z77 | METER BOARD PCB ASSY | 1 | 0.00 |
| L09 | 01 | EPCD | | B13231M19 | NRAO | 03 | A13230Z77 | METER BOARD ARTWORK | 6 | 0.00 |
| L09 | 01 | DSH | | B13230S30 | NRAO | 04 | A13230Z77 | METER BOARD SCHEM DIAG | 2 | 0.00 |
| L09 | 02 | R1 | 1.0 K | 3339P-1-102 | BOURNS | 05 | A13230Z77 | POT,CERMET,4TURN,+-10% | | 2.50 |
| L09 | | R2 | 1.0 K | 3339P-1-102 | BOURNS | 05 | A13230Z77 | POT,CERMET,4TURN,+-10% | | 2.50 |
| L09 | 02 | CR1 | | 1N914B | GE | 06 | A13230Z77 | DIODE,GENL PUR | | 0.07 |
| L09 | | CR2 | | 1N914B | GE | 06 | A13230Z77 | DIODE,GENL PUR | | 0.07 |
| L09 | | R4 | 2.2 K | RCR07 222-5S | | 07 | A13230Z77 | RESISTOR 1/4W | | 0.06 |
| L09 | 02 | R3 | 2.2 K | RCR07 222-5S | | 07 | A13230Z77 | RESISTOR 1/4W | | 0.06 |
| L09 | 05 | P | | 1502-2 | KEYSTONE | 08 | A13230Z77 | TERMINAL,TURRET 1/16 STK | | 0.02 |
| L09 | 04 | P | | 1589-2 | KEYSTONE | 09 | A13230Z77 | STANDOFF,SWAGE 2-56 1/8H | | 0.06 |
| L09 | 01 | EPCA | | B13230AB33 | NRAO | 10 | A13230Z77 | METER BOARD ARTWORK | 4 | 0.00 |

*** TOTAL COST= 5.60 ***

# V L A  D A T A  L I S T I N G

MODULE: L09 PROJECT NO. 13240 DRAWING NO.: A13230Z78
DATA SET: CENTRAL LO RECEIVER BOM: DATA LINE DRIVER AMP PCB 0

| MOD-Q/S-Q/M | | DESCR | VALUE | MFG. PART NO. | MANUFACTURER | ITEM# | BOM# | DESCRIPTION | COST |
|---|---|---|---|---|---|---|---|---|---|
| L09 | | NSA | | A13230Z78 | NRAO | 01 | A13230Z78 | DATA LINE DRIVER AMP PCB 0 | 0.00 |
| L09 | 01 | EPCD | | B13231M15 | NRAO | 02 | A13230Z78 | LO RCVR DRILL DIAGRAM 6 | 0.00 |
| L09 | 01 | EPCP | | B13230P66 | NRAO | 03 | A13230Z78 | RCVR DATA AMP PCB ASSY 1 | 0.00 |
| L09 | 01 | R 02 | 10.0 K | RCR07 103-5S | | 04 | A13230Z78 | RESISTOR 1/4W | 0.06 |
| L09 | 01 | R 03 | 390.0 | RCR07 391-5S | | 05 | A13230Z78 | RESISTOR 1/4W | 0.06 |
| L09 | 01 | R 04 | 200.0 | RCR07 201-5S | | 06 | A13230Z78 | RESISTOR 1/4W | 0.06 |
| L09 | | R 05 | 1.0 K | RCR07 102-5S | | 07 | A13230Z78 | RESISTOR 1/4W | 0.06 |
| L09 | 02 | R 01 | 1.0 K | RCR07 102-5S | | 07 | A13230Z78 | RESISTOR 1/4W | 0.06 |
| L09 | 01 | R 06 | 1.0 M | RCR07 105-5S | | 08 | A13230Z78 | RESISTOR 1/4W | 0.06 |
| L09 | 01 | R 07 | 51.0 | RCR07 510-5S | | 09 | A13230Z78 | RESISTOR 1/4W | 0.06 |
| L09 | 01 | R 08 | 510.0 | RCR07 511-5S | | 10 | A13230Z78 | RESISTOR 1/4W | 0.06 |
| L09 | 01 | R 09 | 56.0 | RCR07 560-5S | | 11 | A13230Z78 | RESISTOR 1/4W | 0.06 |
| L09 | 01 | C 01 | 4.5 PF | DVJ305A | JFD | 12 | A13230Z78 | CAPACITOR,VARIABLE 4.5-50PF | 1.85 |
| L09 | 01 | C 02 | 82.0 PF | CM04ED820J03 | ARCO | 13 | A13230Z78 | CAPACITOR MICA 500WVDC | 0.11 |
| L09 | 02 | C 03 | 0.01 UF | 8121-050-651-103M | ERIE | 14 | A13230Z78 | 0.01UF,50WVDC,CAP.(RED CAP) | .39 |
| L09 | | C 16 | 0.01 UF | 8121-050-651-103M | ERIE | 14 | A13230Z78 | 0.01UF,50WVDC,CAP.(RED CAP) | .39 |
| L09 | 01 | C 04 | 8.0 PF | CM05CD080J03 | ARCO | 15 | A13230Z78 | CAPACITOR MICA 500WVDC | 0.09 |
| L09 | 02 | C 05 | 0.1 UF | 8121-050-651-104M | ERIE | 16 | A13230Z78 | CAPACITOR,MONOLYTHIC 50VDC | 0.19 |
| L09 | | C 07 | 0.1 UF | 8121-050-651-104M | ERIE | 16 | A13230Z78 | CAPACITOR,MONOLYTHIC 50VDC | 0.19 |
| L09 | 01 | C 06 | 5.0 PF | CM04CD050D03 | ARCO | 17 | A13230Z78 | CAPACITOR MICA 500WVDC | 0.11 |
| L09 | 03 | C 09 | 1.0 UF | 8131-050-651-105M | ERIE | 18 | A13230Z78 | CAPACITOR,MONOLYTHIC 50VDC | 1.23 |
| L09 | | C 12 | 1.0 UF | 8131-050-651-105M | ERIE | 18 | A13230Z78 | CAPACITOR,MONOLYTHIC 50VDC | 1.23 |
| L09 | | C 10 | 1.0 UF | 8131-050-651-105M | ERIE | 18 | A13230Z78 | CAPACITOR,MONOLYTHIC 50VDC | 1.23 |
| L09 | 01 | C 13 | 0.47 UF | 8131-050-651-474M | ERIE | 19 | A13230Z78 | CAPACITOR,MONOLYTHIC 50VDC | 0.35 |
| L09 | 01 | U 01 | | LH0032CG | NAT SEMICOND | 20 | A13230Z78 | OP AMP,FET ULTRA FAST | 17.38 |
| L09 | 01 | U 02 | | LH0033CG | NAT SEMICOND | 21 | A13230Z78 | AMPLIFIER,OP FET | 14.49 |
| L09 | 01 | L 01 | 10.0 UH | 9230-44 | MILLER | 22 | A13230Z78 | CHOKE,10MH 10% | 0.60 |
| L09 | 01 | CR 01 | | A2S800 | AERTECH | 24 | A13230Z78 | DIODE,SHOTTKEY | 1.05 |
| L09 | 02 | X | | MP12100S | ROB NUGENT | 25 | A13230Z78 | SOCKET,12 PIN TO-8 SQUARE | 0.28 |
| L09 | | DSH | | B13230S32 | NRAO | 26 | A13230Z78 | DATA RECEIVER SCHEMATIC 2 | 0.00 |
| L09 | | EPCA | | B13230A809 | NRAO | 27 | A13230Z78 | RECEIVER DATA AMPLIFIER 4 | 0.00 |
| L09 | 01 | W | | 297 | ALPHA | 28 | A13230Z78 | WIRE,BUS 20AWG | 0.18 |
| L09 | 01 | R 11 | 7.5 K | RCR07 752-5S | | 29 | A13230Z78 | RESISTOR 1/4W | 0.06 |
| L09 | 01 | C 15 | 10.0 PF | CM04CD100J03 | ARCO | 31 | A13230Z78 | CAPACITOR MICA 500WVDC | 0.11 |
| L09 | 01 | CR 02 | | 5082-2824 | HEWLETT PACK | 32 | A13230Z78 | DIODE,HOT CARRIER | 7.90 |
| L09 | 01 | C 17 | 0.001UF | FB3B10F102W | SPEC CONTROL | 33 | A13230Z78 | CAPACITOR,FEEDTHRU SCREW MT | 0.66 |
| L09 | 02 | R 10 | 8.2 K | RCR07 822-5S | | 34 | A13230Z78 | RESISTOR 1/4W | 0.06 |
| L09 | | R 12 | 8.2 K | RCR07 822-5S | | 34 | A13230Z78 | RESISTOR 1/4W | 0.06 |

*** TOTAL COST= 51.01 ***

*** TOTAL COST FOR MODULE L09 IS 1625.15 ***

## 5.7 L9 Module Photographs

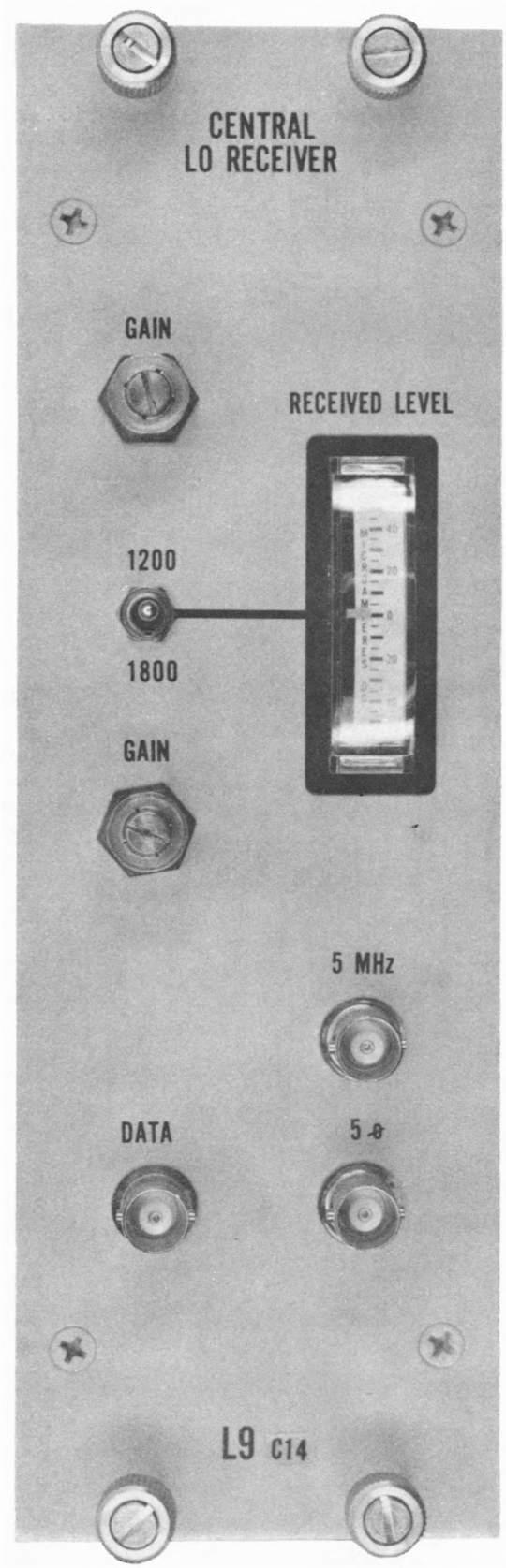


Figure 5.5 - Front Panel L9 Module

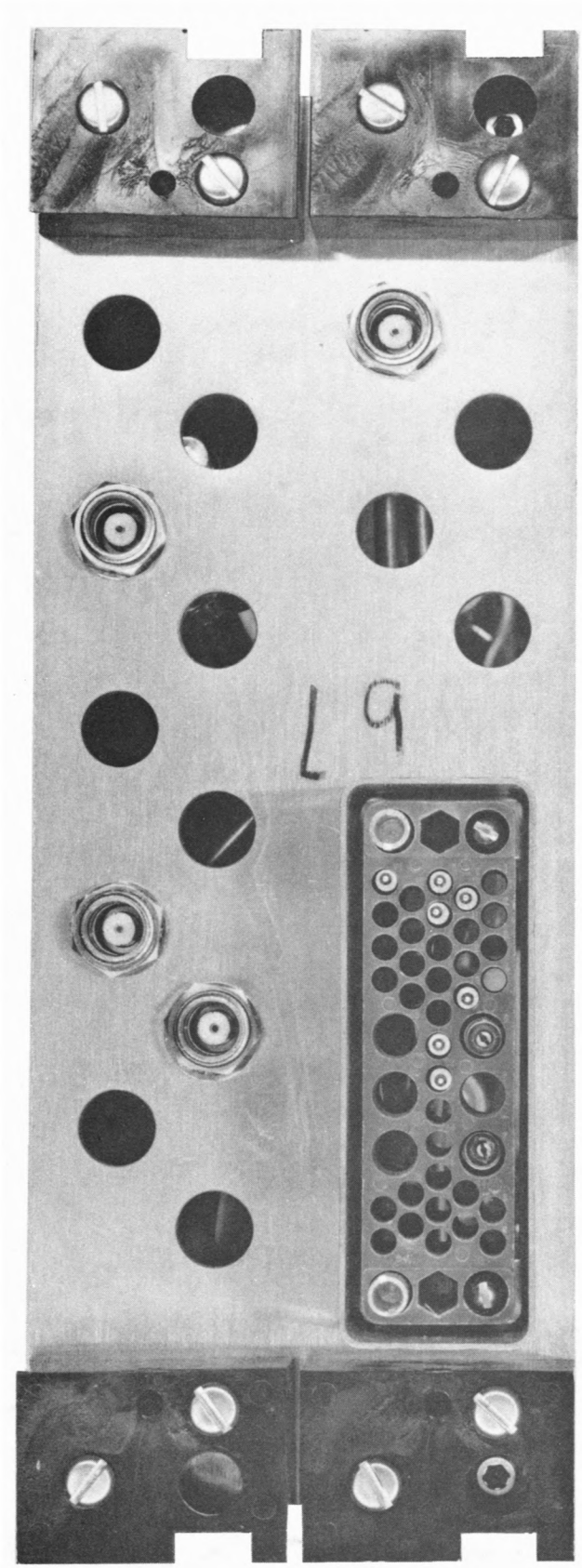


Figure 5.6 - Rear Panel L9 Module

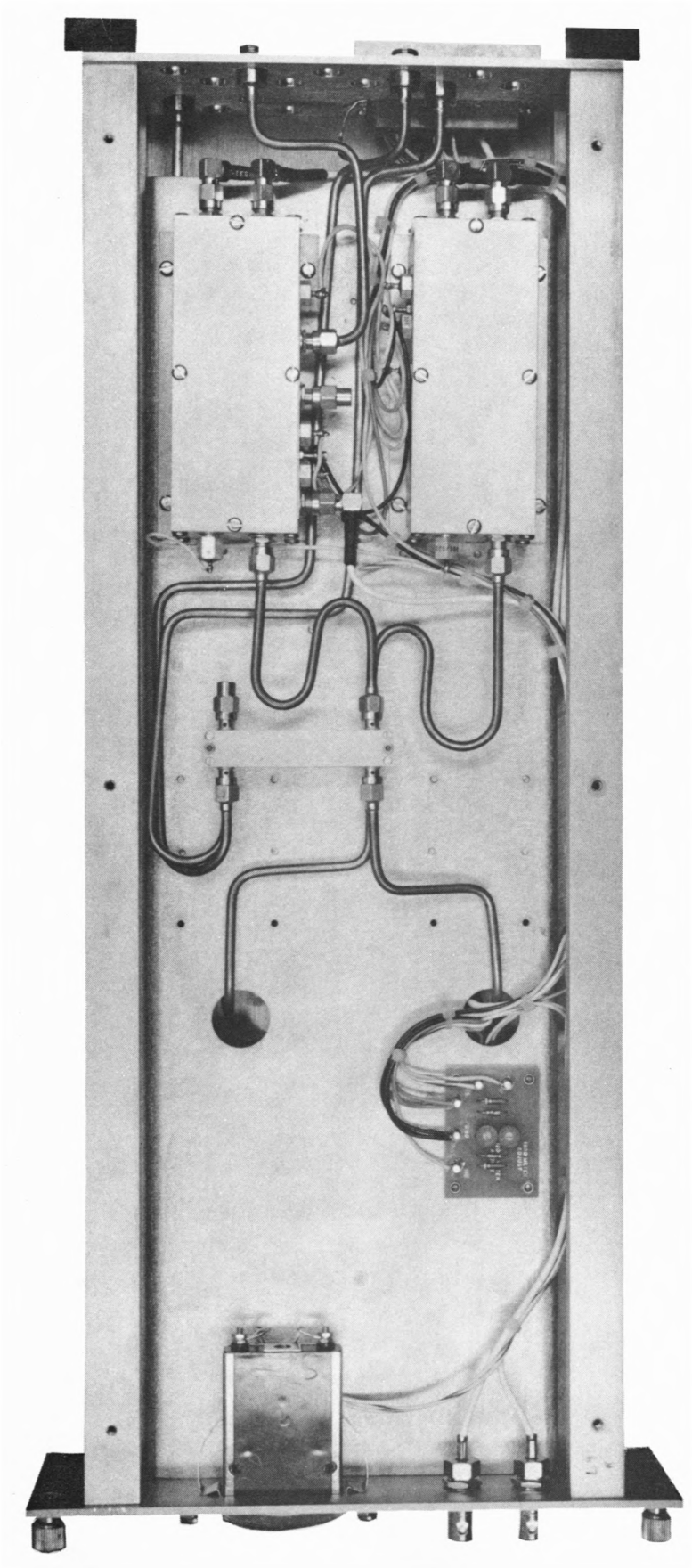

Figure 5.7 - Right-Hand Side View L9 Module

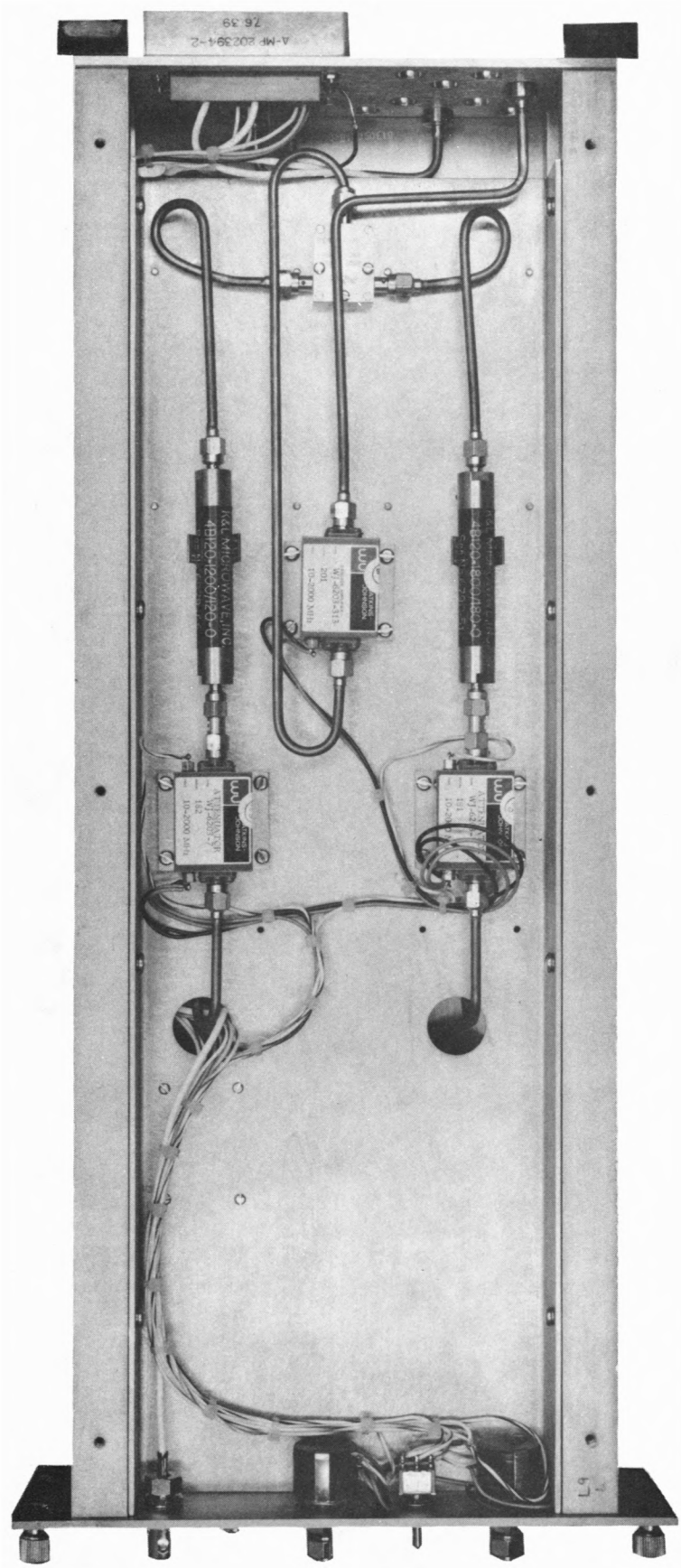


**Figure 5.8 - Left-Hand Side View L9 Module**

## 6.0 L10: CENTRAL LOCAL OSCILLATOR TRANSMITTER - REVISION C

### 6.1 Modifications and Reasons - Reference Block Diagram D13230B8 (Fig. 6.1)

| Description of Modification | Reason for Modification |
|---|---|
| 1. To Revision B: | |
| Delete (a) 6 dB directional coupler DC-1 (BOM: Item 23) (b) two 600 MHz BPFs FL1 and FL5 (BOM: Item 21) and (c) associated RF cables. | 600 MHz + $f_s$ (Where $f_s$ = 19.2 Hz) instead of the 600 MHz is required by L14's in view of new phase detectors in L11C employing digital techniques. Therefore, all this circuitry is unnecessary. |
| 2. To Revision C: | |
| (a) Replace Amplica amplifier (type 200 LSM) by a combination of an attenuator AT3 (nominal 2 dB) and Watkins-Johnson amplifier AR2 (nominal gain = 19 dB) such that the net gain is 17 dB at input signal of - 6 dBm at each of 1200 and 1800 MHz (i.e., total input power = - 3 dBm; total output power = + 14 dBm). | To replace amplifier having excessive power consumption and gain by a lower level amplifier to get a better phase-stability. |
| (b) Delete + 20 V regulator assembly. | + 20 V no longer required in the module. |
| (c) Install 6 dB pads between RF port of each modulator (M1J mixer) and 2-way power combiner DC-3. | To improve isolation between 1200 and 1800 MHz modulators and get appropriate output levels. |

| REV | DATE | DRAWN BY | APPROVED BY | DESCRIPTION |
|---|---|---|---|---|
| B | 5/ | | | REVISED EXTENSIVELY |
| C | 10/77 | | | ADDED P-15 TO CHANNEL |
| D | 9-9-77 | | | REVISED EXTENSIVELY |
| E | 12-2-77 | | | REVISED EXTENSIVELY |

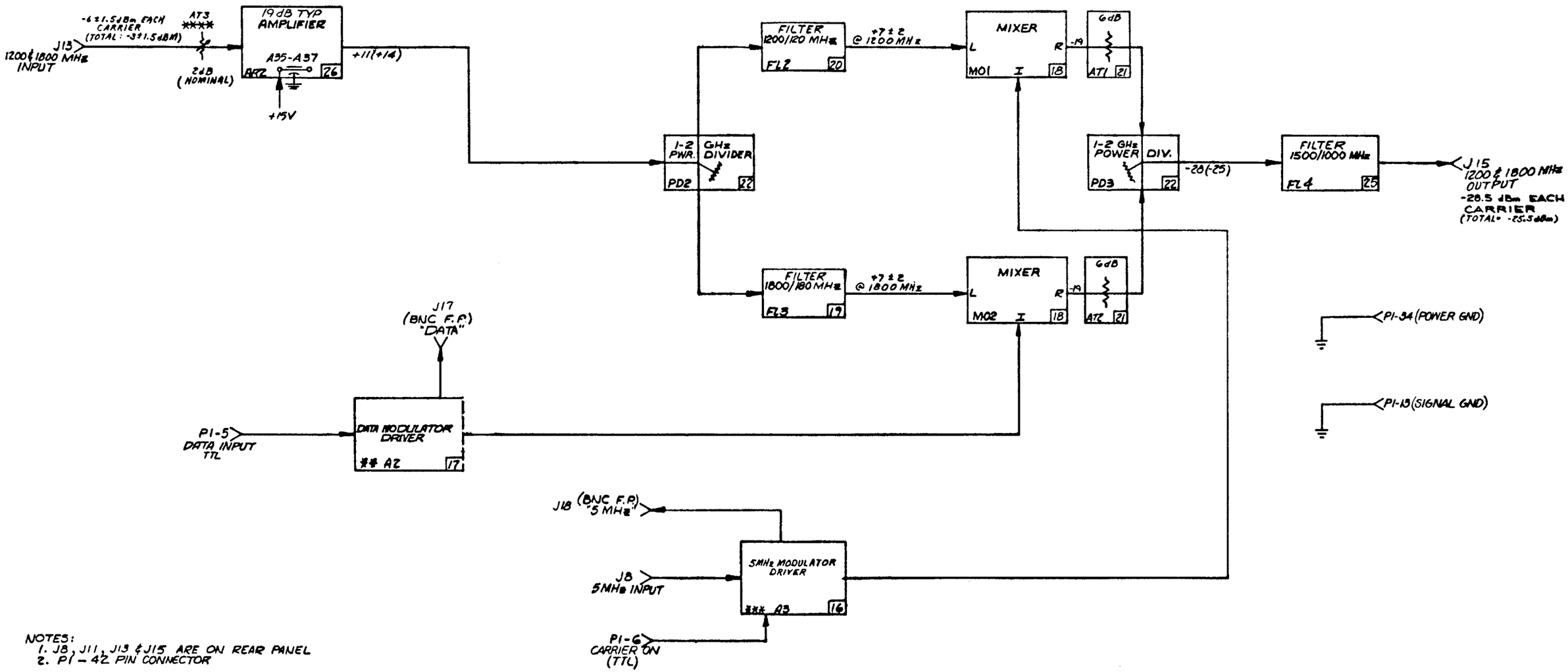


NOTES:
1. J8, J11, J13 & J15 ARE ON REAR PANEL
2. P1 – 42 PIN CONNECTOR
3. * = ASSY DWG B13230P32, BOM A13230Z21, SCHEMATIC DWG B1323055
   ** = ASSY DWG B13230P33, BOM A13230Z22, SCHEMATIC DWG C1323057
   *** = ASSY DWG B13230P26, BOM A13230Z14, SCHEMATIC DWG B1323052
4. J17, J18 BNC ON FRONT PANEL
5. ——► ARROW INDICATES SIGNAL FLOW
6. FL5 21 — ITEM NUMBERS PER BOM A13230Z8; REF DESIG PER IEEE NO. 315 & NRAO SPEC
7. **** = ADJUST TO GIVE ATTENUATOR + AMPLIFIER NET GAIN OF 17dB AT LEVELS SHOWN.

6/22/77 D.

FIGURE 6.1

| NEXT ASSY | USED ON |
|---|---|
| | |

UNLESS OTHERWISE SPECIFIED DIMENSIONS ARE IN INCHES
TOLERANCES: ANGLES ±
3 PLACE DECIMALS (.XXX) ±
2 PLACE DECIMALS (.XX) ±
1 PLACE DECIMALS (.X) ±
MATERIAL:
FINISH:

VLA — LIO CENTRAL LO. TRANSMITTER

BLOCK DIAGRAM

NATIONAL RADIO ASTRONOMY OBSERVATORY
CHARLOTTESVILLE, VA 22901

DRAWN BY
DES. ENGR BY
APPROVED BY

SIZE D | DRAWING NUMBER D1323058 | REV. E | SCALE

| | |
|---|---|
| (d) Change resistor R12 from 200 Ω to 620 Ω in 5 MHz Modulator Driver. | To provide adequate adjustment range for output 1200 MHz carrier with modified RF input to L port of the modulator. |

6.2 Drawings Effected

An updated list of drawings, bills of materials (BOM's), etc. is enclosed. The drawings effected are:

| | |
|---|---|
| Block Diagram | D13230B08 Rev. E |
| RF Interconnections | D13230B18 |
| BOM: | A13230Z08 |
| BOM; + 20 V Regulator | A13230Z21-L10 - Delete |
| Schematic: + 20 V Regulator | B13230S05-L10 - Delete |
| Rack D Wire List | A13050W2 |

## 6.3 Input Output Connections

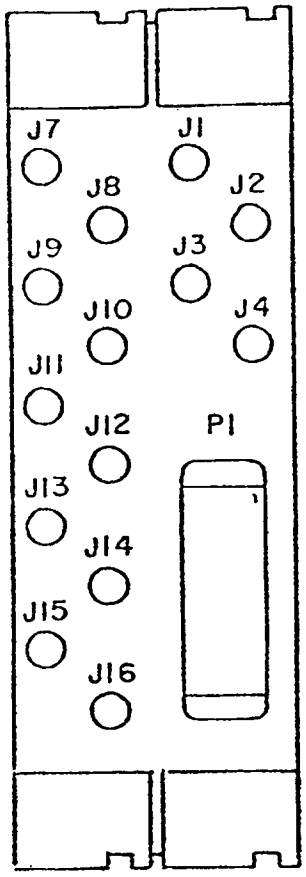


DOUBLE WIDE MODULE
(REAR VIEW)

| CONN | FUNCTION |
|---|---|
| J1 | |
| J2 | |
| J3 | |
| J4 | |
| J7 | |
| J8 | +8.5 ± 1 @ 5 MHz Input |
| J9 | |
| J10 | |
| J11 | |
| J12 | |
| J13 | 1.2 & 1.8 GHz -6(-3) ±1.5dBm Input |
| J14 | |
| J15 | 1.2 & 1.8 GHz -28.5(-25.5)±1.5dBm Output |
| J16 | |

LEGEND: No paranthesis - Each L.O. Carrier
Paranthesis - Total L.O. Power

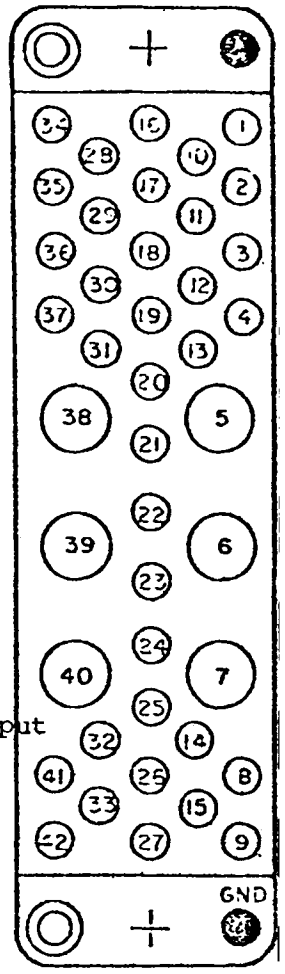


P1 (REAR VIEW)

P1

| PIN | FUNCTION | WIRE COLOR | PIN | FUNCTION | WIRE COLO |
|---|---|---|---|---|---|
| 1 | | | 22 | | |
| 2 | | | 23 | | |
| 3 | | | 24 | | |
| 4 | | | 25 | | |
| 5 | DATA IN TTL | Co-axial, RG-174/U | 26 | | |
| 6 | 1200MHz Carrier on TTL | | 27 | | |
| 7 | | | 28 | -28VDC * | GREEN |
| 8 | | | 29 | +28VDC * | GREY |
| 9 | | | 30 | | |
| 10 | +5VDC | ORANGE | 31 | | |
| 11 | -5VDC * | BROWN | 32 | | |
| 12 | | | 33 | | |
| 13 | | | 34 | PWR. GROUND | BLACK |
| 14 | | | 35 | | |
| 15 | | | 36 | | |
| 16 | +15VDC | RED | 37 | | |
| 17 | -15VDC | YELLOW | 38 | | |
| 18 | | | 39 | | |
| 19 | | | 40 | | |
| 20 | | | 41 | | |
| 21 | | | 42 | HIGH QUAL. GROUND | |

* INDICATES A FUNCTION NOT FOUND IN THIS MODULE.

## 6.4 Central L.O. Transmitter Rev. C (L10C) Module List of Drawings, BOM's, etc.

| | |
|---|---|
| Block Diagram | D13230B08 |
| 5 MHz Modulator Driver Schematic (see Fig. 6-2) | B13230S02 |
| Data Modulator Driver Schematic | C13230S07 |

**Bills of Materials**

| | |
|---|---|
| Central L.O. Transmitter | A13230Z08 |
| 5 MHz Modulator Driver | A13230Z14 |
| 5 MHz Modulator Driver PC Board | A13230Z15 |
| Data Modulator Driver | A13230Z22 |
| Data Modulator Driver PC Board | A13230Z23 |

**Assembly Drawings**

Not Available

| Printed Circuit Boards, etc. | Art Work | Silk Screen | Mechanical |
|---|---|---|---|
| 5 MHz Modulator Driver PC Board | B13230AB10 | | C13230M45 |
| Data Modulator Driver PC Board | B13230AB08 | | C13230M56 |
| Module Wire List | | | A13230W08 |
| Module RF Inter Connection Diagram | | | D13230B18 |

**Mechanical**

| | |
|---|---|
| Module Guide | B13050M04 |
| Partition Plate | D13230M64 |
| Panel, Rear | C13210M04 |
| Cover, Perforated | C13050M22-1 |
| Bar Support Top and Bottom-Left | B13230M36 |
| Bar Support Top and Bottom | B13050M23 |
| Panel, Front | B13230M34 |
| Right & Left Side Plates | B13050M18 |

| REV. | DATE | DRAWN BY | APPRV'D BY | DESCRIPTION |
|---|---|---|---|---|
| A | 1-10-78 | | | CR2: "A2S800" WAS "HP2800" |
| B | 3-16-78 | | | CHG: R12 WAS 200 Ω |
| C | 3-11-78 | | | CHG: TITLE WAS 5MHz DRIVER SCHEMATIC. |

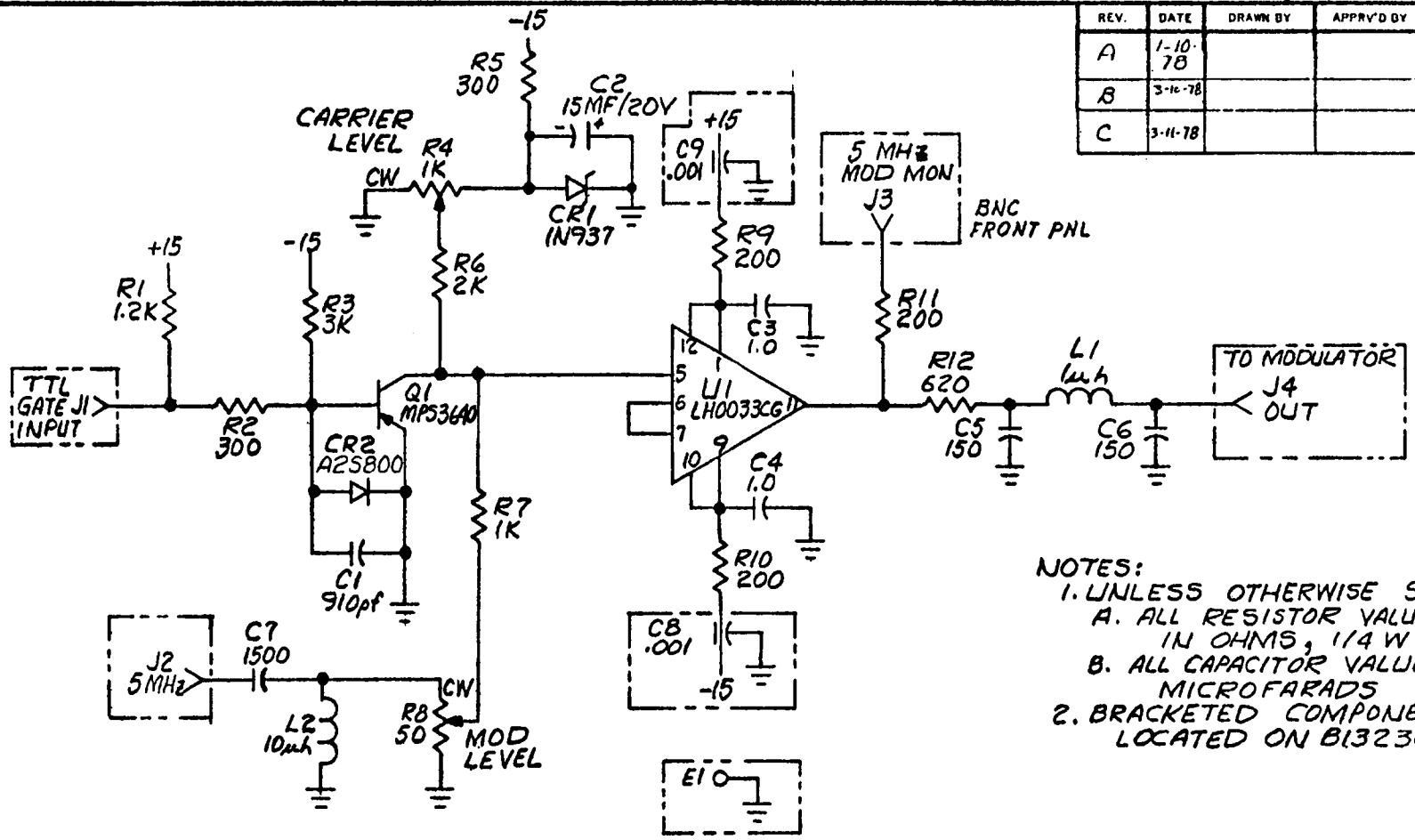


NOTES:
1. UNLESS OTHERWISE SPECIFIED:
   A. ALL RESISTOR VALUES ARE IN OHMS, 1/4 W
   B. ALL CAPACITOR VALUES ARE IN MICROFARADS
2. BRACKETED COMPONENTS ARE LOCATED ON B13230P26

| LAST COMPONENT DESIG USED | | | | | | | |
|---|---|---|---|---|---|---|---|
| C | R | CR | Q | L | J | U | |
| 9 | 12 | 2 | 1 | 2 | 4 | 1 | |

| | |
|---|---|
| | |
| | |
| | A13230215 |
| NEXT ASSY | USED ON |

UNLESS OTHERWISE SPECIFIED DIMENSIONS ARE IN INCHES
TOLERANCES: ANGLES ±
3 PLACE DECIMALS (.XXX): ±
2 PLACE DECIMALS (.XX): ±
1 PLACE DECIMALS (.X): ±

MATERIAL:

FINISH:

VLA PROJECT: LIO CENTRAL LO TRANSMITTER

TITLE: 5 MHz MODULATION DRIVER SCHEMATIC

NATIONAL RADIO ASTRONOMY OBSERVATORY
CHARLOTTESVILLE, VA. 22901

DRAWN BY — DATE 16 JUNE 78
DESIGNED BY — DATE 6/4/75
APPROVED BY — DATE

SHEET NUMBER — DRAWING NUMBER B13230S2 — REV. C — SCALE

BRUNING 40-22 24984

FIGURE 6-2

| | |
|---|---|
| Data Modulator Driver | B13230M27, 29, 30 |
| 5 MHz Modulator Driver | B13230M46, 47, 48, 49 |
| Terminal Turret | B13230M98 |
| Data Modulator Filter End Plate | B13230M38 |
| Mixer Mounting Brackets | B13230M65 |

## 6.5 Bills of Materials (L10C)

# V L A  D A T A  L I S T I N G

MODULE: L10 PROJECT NO. 13240 DRAWING NO.: A13230Z08
DATA SET: CENTRAL LO TRANSMITTER BOM: CENTRAL LC TRANSMITTER 0

| MOD-Q/S-Q/N | | DESCR | VALUE | MFG. PART NO. | MANUFACTURER | ITEM# | BOM# | DESCRIPTION | | COST |
|---|---|---|---|---|---|---|---|---|---|---|
| L10 | | NST | | A13230Z08 | NRAO | 1 | A13230Z08 | CENTRAL LC TRANSMITTER | 0 | 0.00 |
| L10 | 4 | MPM | | B13050M04 | NRAO | 2 | A13230Z08 | GUIDE | Z | 0.20 |
| L10 | 1 | MPM | | D13230M64 | NRAO | 3 | A13230Z08 | PARTITION PLATE | M | 35.93 |
| L10 | 1 | MPM | | C13210M04 | NRAO | 4 | A13230Z08 | PANEL, REAR | F | 15.93 |
| L10 | 2 | MPM | | C13050M22-1 | NRAO | 5 | A13230Z08 | COVER,PERFORATED | K | 1.38 |
| L10 | 3 | MPM | | B13230M65 | NRAO | 6 | A13230Z08 | MIXER MOUNT | M | 3.30 |
| L10 | 2 | MPM | | B13230M36 | NRAO | 7 | A13230Z08 | BAR SUP TOP & BTM LEFT | G | 16.91 |
| L10 | 2 | MPM | | B13050M23 | NRAO | 8 | A13230Z08 | BAR, SUP. TOP & BOTTOM | G | 13.46 |
| L10 | 1 | MPM | | B13230M34 | NRAO | 9 | A13230Z08 | PANEL, FRONT | A | 75.00 |
| L10 | 2 | MPM | | KC-19-153 | KINGS | 10 | A13230Z08 | CONNECTOR, PNL BNC | | 2.35 |
| L10 | 2 | MPM | | B13050M18 | NRAO | 12 | A13230Z08 | RIGHT & LEFT SIDE PLATES | H | 8.78 |
| L10 | 08 | H | | SLWS 4-40 | HW | 15 | A13230Z08 | SPLIT-LOCK WASHER SS | | 0.02 |
| L10 | 1 | NSA | | A13230Z14 | NRAO | 16 | A13230Z08 | FAST PULSE MODULATOR | 0 | 0.00 |
| L10 | 1 | NSA | | A13230Z22 | NRAO | 17 | A13230Z08 | DATA MODULATOR | 0 | 0.00 |
| L10 | 02 | M 01 | | M1J | WATKINS JOHN | 18 | A13230Z08 | MIX,DBL BAL DC-1GHZ SMA CON | | 73.00 |
| L10 | | M 02 | | M1J | WATKINS JOHN | 18 | A13230Z08 | MIX,DBL BAL DC-1GHZ SMA CON | | 73.00 |
| L10 | 1 | FL 03 | | 4B120-1800/120-0 | K&L MICROWAVE | 19 | A13230Z08 | FILTER,TUBULAR BP | | 45.00 |
| L10 | 1 | FL 02 | | 4B120-1200/120-0 | K&L MICROWAVE | 20 | A13230Z08 | FILTER,TUBULAR BP | | 45.00 |
| L10 | | AT 02 | | FP87-06 | TEXSCAN | 21 | A13230Z08 | 6DB ATTENUATOR | | 35.00 |
| L10 | 02 | AT 01 | | FP87-06 | TEXSCAN | 21 | A13230Z08 | 6DB ATTENUATOR | | 35.00 |
| L10 | 2 | PD 02 | | 20493 | OMNI-SPECTRA | 22 | A13230Z08 | POWER DVDR,2 WAY,1-2GHZ | | 126.00 |
| L10 | | PD 03 | | 20493 | OMNI-SPECTRA | 22 | A13230Z08 | POWER DVDR,2 WAY,1-2GHZ | | 126.00 |
| L10 | 1 | FL 04 | | 4B120-1500/1000-0 | K&L MICROWAVE | 25 | A13230Z08 | FILTER,TUBULAR BP | | 45.00 |
| L10 | 1 | AR 02 | | 6203-313 | WATKINS JOHN | 26 | A13230Z08 | SPEC A13230N4 | | 282.00 |
| L10 | 1 | P | | 204186-5 | AMP SPEC IND | 27 | A13230Z08 | BLOCK,PIN 42 MIXED | | 1.68 |
| L10 | 1 | P | | 202394-2 | AMP SPEC IND | 28 | A13230Z08 | HOOD,PIN(42 AND 50 BLOCK) | | 0.87 |
| L10 | 03 | J | | OMQ-3043-75 | OMNI-SPECTRA | 29 | A13230Z08 | JACK,BLKHD RF MOUNT 141SR | | 1.50 |
| L10 | 4 | P | | OSM-531-3 | OMNI-SPECTRA | 30 | A13230Z08 | PLUG RT ANGL RG188 | | 3.57 |
| L10 | 02 | P | | OSM-218 | OMNI-SPECTRA | 31 | A13230Z08 | ADAPTER,STRGHT PLUG/PLUG | | 4.56 |
| L10 | 8 | W | | UT-141A | UNIFORM TUBES | 32 | A13230Z08 | CABLE,RF SEMIRIGID | | 0.45 |
| L10 | 15 | P | | OSM-201-1A | OMNI-SPECTRA | 33 | A13230Z08 | CONNECTOR,PLUG 141SR | | 0.85 |
| L10 | 2 | P | | OSM-201-1 | OMNI-SPECTRA | 34 | A13230Z08 | CONNECTOR,PLUG 141SR | | 0.94 |
| L10 | 1 | NSA | | A13230Z21 | NRAO | 35 | A13230Z08 | POSITIVE VOLTAGE REGULATRO | | 0.00 |
| L10 | | DSH | | D13230B08 | NRAO | 36 | A13230Z08 | BLOCK DIAGRAM | 7 | 0.00 |
| L10 | 2 | P | | 201143-5 | AMP SPEC IND | 37 | A13230Z08 | COAX PIN | | 2.48 |
| L10 | 4 | P | | 204188-1 | AMP SPEC IND | 38 | A13230Z08 | CONTACT, PIN | | 0.23 |
| L10 | 2 | P | | 203964-6 | AMP SPEC IND | 39 | A13230Z08 | GUIDE SOCKET | | 0.21 |
| L10 | 1 | P | | 200833-4 | AMP SPEC IND | 40 | A13230Z08 | GUIDE PIN | | 0.23 |
| L10 | 1 | P | | 202514-1 | AMP SPEC IND | 41 | A13230Z08 | GROUND GUIDE PIN | | 0.42 |
| L10 | | DWW | | A13230W08 | NRAO | 43 | A13230Z08 | CENTRAL LC TRANSMITTER | 8 | 0.00 |
| L10 | 04 | H | | HNS 4-40 | HW | 50 | A13230Z08 | HEX NUT,SS | | 0.02 |
| L10 | 03 | H | | PHSS 6-32 X 0.250 | HW | 51 | A13230Z08 | PAN HEAD SLOTTED SS | | 0.02 |
| L10 | 4 | H | | PHSS 6-32 X 0.375 | HW | 53 | A13230Z08 | PAN HEAD SLOTTED SS | | 0.02 |
| L10 | 08 | H | | PHSS 6-32 X 0.750 | HW | 54 | A13230Z08 | PAN HEAD SLOTTED SS | | 0.02 |
| L10 | 06 | H | | PHSS 2-56 X 0.500 | HW | 56 | A13230Z08 | PAN HEAD SLOTTED SS | | 0.02 |
| L10 | 16 | H | | FHSS 6-32 X 0.375 | HW | 58 | A13230Z08 | FLAT HEAD SLOTTED SS SCREW | | 0.02 |
| L10 | 2 | H | | HSHS 6-32 X 0.250 | HW | 59 | A13230Z08 | HEX-SOCKET HD SLOTTED SS | | 0.02 |
| L10 | 4 | H | | 47-10-204-10 | SOUTHCO | 60 | A13230Z08 | FASTNER,CAPTIVE | | 0.67 |
| L10 | 04 | H | | M12-A | K&L MICROWAVE | 61 | A13230Z08 | MOUNTING CLIP | | 0.05 |
| L10 | 01 | H | | 1411-4 | H H SMITH | 62 | A13230Z08 | LUG,TERMINAL LOCK | | 0.15 |

*** TOTAL COST= 1168.00 ***

# V L A  D A T A  L I S T I N G

MODULE: L10 PROJECT NO. 13240 DRAWING NO.: A13230Z14
DATA SET: CENTRAL LO TRANSMITTER BOM: FAST PULSE MODULATOR 0

| MOD-C/S-O/M | | DESCR | VALUE | MFG. PART NO. | MANUFACTURER | ITEM# | BOM# | DESCRIPTION | | COST |
|---|---|---|---|---|---|---|---|---|---|---|
| L10 | | NSA | | A13230Z14 | NRAO | 1 | A13230Z14 | FAST PULSE MODULATOR | 0 | 0.00 |
| L10 | 1 | MPN | | B13230M38 | NRAO | 2 | A13230Z14 | DATA FILTER END PANEL | J | 8.12 |
| L10 | 1 | MPN | | B13230M30 | NRAO | 3 | A13230Z14 | RECEIVER DATA AMPLIFIER | J | 3.71 |
| L10 | 1 | MPN | | B13230M29 | NRAO | 4 | A13230Z14 | RECEIVER DATA AMPLIFIER | J | 6.72 |
| L10 | 1 | MPN | | B13230M27 | NRAO | 5 | A13230Z14 | RECEIVER DATA AMPLIFIER | J | 2.73 |
| L10 | 8 | H | | PHSS 4-40 X 0.500 | HW | 6 | A13230Z14 | PAN HEAD SLOTTED SS | | 0.02 |
| L10 | 8 | H | | FHSS 4-40 X 0.375 | HW | 7 | A13230Z14 | FLAT HEAD SLOTTED SS SCREW | | 0.02 |
| L10 | 1 | MPN | | B13230M48 | NRAO | 8 | A13230Z14 | 5 MHZ DRIVER | J | 0.00 |
| L10 | 1 | MPN | | B13230M47 | NRAO | 9 | A13230Z14 | 5 MHZ DRIVER | J | 0.00 |
| L10 | 1 | NSA | | A13230Z15 | NRAO | 16 | A13230Z14 | PC BOARD FAST PULSE MOD | 0 | 0.00 |
| L10 | 02 | C 08 | 0.001UF | FB3B10F102W | SPEC CONTROL | 17 | A13230Z14 | CAPACITOR,FEEDTHRU SCREW | MT | 0.66 |
| L10 | | C 09 | 0.001UF | FB3B10F102W | SPEC CONTROL | 17 | A13230Z14 | CAPACITOR,FEEDTHRU SCREW | MT | 0.66 |
| L10 | 1 | E 01 | | 1587-1 | KEYSTONE | 18 | A13230Z14 | TERMINAL,TURRET .125 4-40 | THD | 0.09 |
| L10 | | F | | B13230M98 | NRAO | 18 | A13230Z14 | TERMINAL, TURRET MOD | N | 0.00 |
| L10 | 4 | J 01 | | OSM-211 | OMNI-SPECTRA | 19 | A13230Z14 | JACK BLKHD FDTHRU | | 2.15 |
| L10 | | J 03 | | OSM-211 | OMNI-SPECTRA | 19 | A13230Z14 | JACK BLKHD FDTHRU | | 2.15 |
| L10 | | J 04 | | OSM-211 | OMNI-SPECTRA | 19 | A13230Z14 | JACK BLKHD FDTHRU | | 2.15 |
| L10 | | J 02 | | OSM-211 | OMNI-SPECTRA | 19 | A13230Z14 | JACK BLKHD FDTHRU | | 2.15 |
| L10 | | DSH | | B13230S02 | NRAO | 20 | A13230Z14 | 5 MHZ DRIVER SCHEMATIC | 2 | 0.00 |

*** TOTAL COST= 31.61 ***

# V L A  D A T A  L I S T I N G

MODULE: L10 PROJECT NO. 13240 DRAWING NO.: A13230Z15
DATA SET: CENTRAL LO TRANSMITTER BOM: PC BOARD FAST PULSE MOD 0

| MOD-Q/S-Q/M | | DESCR | VALUE | | MFG. PART NO. | MANUFACTURER | ITEM# | BOM# | DESCRIPTION | COST |
|---|---|---|---|---|---|---|---|---|---|---|
| L10 | | NSA | | | A13230Z15 | NRAO | 01 | A13230Z15 | PC BOARD FAST PULSE MOD 0 | 0.00 |
| L10 | 01 | EPCD | | | C13230M45 | NRAO | 02 | A13230Z15 | FAST PULSE MOD DR DIAG 6 | 3.15 |
| L10 | 01 | R 01 | 1.2 | K | RCR07 122-5S | | 03 | A13230Z15 | RESISTOR 1/4W | 0.06 |
| L10 | 02 | R 02 | 300.0 | | RCR07 301-5S | | 04 | A13230Z15 | RESISTOR 1/4W | 0.06 |
| L10 | | R 05 | 300.0 | | RCR07 301-5S | | 04 | A13230Z15 | RESISTOR 1/4W | 0.06 |
| L10 | 01 | R 03 | 3.0 | K | RCR07 302-5S | | 05 | A13230Z15 | RESISTOR 1/4W | 0.06 |
| L10 | 01 | R 04 | 1.0 | K | 3339P-1-102 | BOURNS | 06 | A13230Z15 | POT,CERMET,4TURN,+-10% | 2.50 |
| L10 | 01 | R 06 | 2.0 | K | RCR07 202-5S | | 07 | A13230Z15 | RESISTOR 1/4W | 0.06 |
| L10 | 01 | R 07 | 1.0 | K | RCR07 102-5S | | 08 | A13230Z15 | RESISTOR 1/4W | 0.06 |
| L10 | 01 | R 08 | 50.0 | | 3339P-1-500 | BOURNS | 09 | A13230Z15 | POT.CERMET,4TURN,+-10% | 1.98 |
| L10 | 04 | R 09 | 200.0 | | RCR07 201-5S | | 10 | A13230Z15 | RESISTOR 1/4W | 0.06 |
| L10 | | R 10 | 200.0 | | RCR07 201-5S | | 10 | A13230Z15 | RESISTOR 1/4W | 0.06 |
| L10 | | R 11 | 200.0 | | RCR07 201-5S | | 10 | A13230Z15 | RESISTOR 1/4W | 0.06 |
| L10 | | R 12 | 200.0 | | RCR07 201-5S | | 10 | A13230Z15 | RESISTOR 1/4W | 0.06 |
| L10 | 01 | C 01 | 910.0 | PF | DM15911J | ARCO | 11 | A13230Z15 | CAPACITOR,MICA 500VDC | 0.12 |
| L10 | 01 | C 02 | 15.0 | UF | CS13BE156K | SPRAGUE | 12 | A13230Z15 | CAPACITOR,TANTALUM 20VDC | 0.24 |
| L10 | | C 04 | 1.0 | UF | 8131-050-651-105M | ERIE | 13 | A13230Z15 | CAPACITOR,MONOLYTHIC 50VDC | 1.23 |
| L10 | 02 | C 03 | 1.0 | UF | 8131-050-651-105M | ERIE | 13 | A13230Z15 | CAPACITOR,MONOLYTHIC 50VDC | 1.23 |
| L10 | 02 | C 05 | 150.0 | PF | DM51151J | ARCO | 14 | A13230Z15 | CAPACITOR,MICA 300VDC | 0.13 |
| L10 | | C 06 | 150.0 | PF | DM51151J | ARCO | 14 | A13230Z15 | CAPACITOR,MICA 300VDC | 0.13 |
| L10 | 01 | C 07 | 1500.0 | PF | DM19152J | ARCO | 15 | A13230Z15 | CAPACITOR,MICA 500VDC | 0.15 |
| L10 | 01 | Q 01 | | | MPS3640 | MOTOROLA | 16 | A13230Z15 | TRANSISTOR,SM SIGNAL | 0.13 |
| L10 | 01 | U 11 | | | LH0033CG | NAT SEMICOND | 17 | A13230Z15 | AMPLIFIER,OP FET | 14.49 |
| L10 | 01 | L 01 | 1.0 | UH | 9230-20 | MILLER | 18 | A13230Z15 | CHOKE,RF MICRO MINATURE | 0.30 |
| L10 | 01 | L 02 | 10.0 | UH | 9230-44 | MILLER | 19 | A13230Z15 | CHOKE,10MH 10% | 0.60 |
| L10 | 01 | CR 01 | | | 1N937B | MOTOROLA | 20 | A13230Z15 | DIODE,REF TC 9.0V | 4.58 |
| L10 | 01 | CR 02 | | | A2S800 | AERTECH | 21 | A13230Z15 | DIODE,SHOTTKEY | 1.05 |
| L10 | 01 | X | | | 3-LPS-B | CINCH | 22 | A13230Z15 | SOCKET,TRANSISTOR TO-5,TO-18 | 0.12 |
| L10 | 01 | X | | | MP12100S | ROB NUGENT | 23 | A13230Z15 | SOCKET,12 PIN TO-8 SQUARE | 0.28 |
| L10 | | DSH | | | B13230S02 | NRAO | 24 | A13230Z15 | 5 MHZ DRIVER SCHEMATIC 2 | 0.00 |
| L10 | | EPCA | | | B13230AB10 | NRAO | 25 | A13230Z15 | 5 MHZ DRIVER 4 | 0.00 |

*** TOTAL COST= 33.01 ***

# V L A  D A T A  L I S T I N G

MODULE: L10
DATA SET: CENTRAL LO TRANSMITTER

PROJECT NO. 13240

DRAWING NO.: A13230Z22
BOM: DATA MODULATOR 0

| MOD-Q/S-Q/M | | DESCR | VALUE | MFG. PART NO. | MANUFACTURER | ITEM# | BOM# | DESCRIPTION | | COST |
|---|---|---|---|---|---|---|---|---|---|---|
| L10 | | NSA | | A13230Z22 | NRAO | 1 | A13230Z22 | DATA MODULATOR | 0 | 0.00 |
| L10 | 1 | MPN | | B13230M38 | NRAO | 2 | A13230Z22 | DATA FILTER END PANEL | J | 8.12 |
| L10 | 1 | MPN | | B13230M30 | NRAO | 3 | A13230Z22 | RECEIVER DATA AMPLIFIER | J | 3.71 |
| L10 | 1 | MPN | | B13230M29 | NRAO | 4 | A13230Z22 | RECEIVER DATA AMPLIFIER | J | 6.72 |
| L10 | 1 | MPN | | B13230M27 | NRAO | 5 | A13230Z22 | RECEIVER DATA AMPLIFIER | J | 2.73 |
| L10 | 1 | MPN | | B13230M46 | NRAO | 6 | A13230Z22 | DATA MOD DRVR END PANEL | J | 0.00 |
| L10 | 1 | MPN | | B13230M49 | NRAO | 7 | A13230Z22 | DTA MOD DRVR SIDE PANEL | J | 0.00 |
| L10 | 8 | H | | PHSS 4-40 X 0.500 | HW | 8 | A13230Z22 | PAN HEAD SLOTTED SS | | 0.02 |
| L10 | 8 | H | | FHSS 4-40 X 0.375 | HW | 9 | A13230Z22 | FLAT HEAD SLOTTED SS SCREW | | 0.02 |
| L10 | 3 | J 01 | | OSM-211 | OMNI-SPECTRA | 17 | A13230Z22 | JACK BLKHD FDTHRU | | 2.15 |
| L10 | | J 02 | | OSM-211 | OMNI-SPECTRA | 17 | A13230Z22 | JACK BLKHD FDTHRU | | 2.15 |
| L10 | | J 03 | | OSM-211 | OMNI-SPECTRA | 17 | A13230Z22 | JACK BLKHD FDTHRU | | 2.15 |
| L10 | 1 | E 01 | | 1587-1 | KEYSTONE | 18 | A13230Z22 | TERMINAL,TURRET .125 4-40THD | | 0.09 |
| L10 | 1 | C 01 | 0.001UF | FB3B10F102W | SPEC CONTROL | 19 | A13230Z22 | CAPACITOR,FEEDTHRU SCREW MT | | 0.66 |
| L10 | | C 12 | 0.001UF | FB3B10F102W | SPEC CONTROL | 19 | A13230Z22 | CAPACITOR,FEEDTHRU SCREW MT | | 0.66 |
| L10 | 1 | NSB | | A13230Z23 | NRAO | 20 | A13230Z22 | MOD BOARD | 0 | 0.00 |
| L10 | | DSH | | C13230S07 | NRAO | 21 | A13230Z22 | DATA MODULATOR DRIVER | 2 | 0.00 |

*** TOTAL COST= 28.80 ***

# V L A  D A T A  L I S T I N G

MODULE: L10 PROJECT NO. 13240 DRAWING NO.: A13230Z23
DATA SET: CENTRAL LO TRANSMITTER BOM: MOD BOARD 0

| MOD-O/S-O/M | | DESCR | VALUE | | MFG. PART NO. | MANUFACTURER | ITEM# | BOM# | DESCRIPTION | | COST |
|---|---|---|---|---|---|---|---|---|---|---|---|
| L10 | | NSA | | | A13230Z23 | NRAC | 01 | A13230Z23 | MOD BOARD | 0 | 0.00 |
| L10 | 01 | EPCD | | | C13230M56 | NRAO | 02 | A13230Z23 | DATA MODULATOR DRIVER | 6 | 0.00 |
| L10 | 01 | R 01 | 620.0 | | RCR07 621-5S | | 03 | A13230Z23 | RESISTOR 1/4W | | 0.06 |
| L10 | 01 | R 02 | 300.0 | | RCR07 301-5S | | 04 | A13230Z23 | RESISTOR 1/4W | | 0.06 |
| L10 | 01 | R 03 | 2.0 | K | RCR07 202-5S | | 05 | A13230Z23 | RESISTOR 1/4W | | 0.06 |
| L10 | 01 | R 04 | 5.0 | K | 3339P-1-502 | BOURNS | 06 | A13230Z23 | POT.CERMET,4TURN,+-10% | | 1.98 |
| L10 | 01 | R 05 | 10.0 | K | RCR07 103-5S | | 07 | A13230Z23 | RESISTOR 1/4W | | 0.06 |
| L10 | 01 | R 06 | 390.0 | | RCR07 391-5S | | 08 | A13230Z23 | RESISTOR 1/4W | | 0.06 |
| L10 | 01 | R 07 | 2.0 | K | 3339P-1-202 | BOURNS | 09 | A13230Z23 | POT.CERMET,4TURN,+-10% | | 1.98 |
| L10 | 01 | R 08 | 1.5 | K | RCR07 152-5S | | 10 | A13230Z23 | RESISTOR 1/4W | | 0.06 |
| L10 | 01 | R 09 | 240.0 | | RCR07 241-5S | | 11 | A13230Z23 | RESISTOR 1/4W | | 0.06 |
| L10 | 01 | R 10 | 33.0 | | RCR07 330-5S | | 12 | A13230Z23 | RESISTOR 1/4W | | 0.06 |
| L10 | 01 | R 11 | 510.0 | | RCR07 511-5S | | 13 | A13230Z23 | RESISTOR 1/4W | | 0.06 |
| L10 | 03 | R 12 | 200.0 | | RCR07 201-5S | | 14 | A13230Z23 | RESISTOR 1/4W | | 0.06 |
| L10 | | R 13 | 200.0 | | RCR07 201-5S | | 14 | A13230Z23 | RESISTOR 1/4W | | 0.06 |
| L10 | | R 14 | 200.0 | | RCR07 201-5S | | 14 | A13230Z23 | RESISTOR 1/4W | | 0.06 |
| L10 | 01 | R 15 | 100.0 | | RCR07 101-5S | | 15 | A13230Z23 | RESISTOR 1/4W | | 0.06 |
| L10 | 01 | R 16 | 5.1 | K | RCR07 512-5S | | 16 | A13230Z23 | RESISTOR 1/4W | | 0.06 |
| L10 | 01 | C 02 | 15.0 | UF | CS13BF156K | SPRAGUE | 17 | A13230Z23 | CAPACITOR,TANTALUM 20VDC | | 0.24 |
| L10 | 01 | C 03 | 10.0 | PF | CM04CD100J03 | ARCO | 18 | A13230Z23 | CAPACITOR MICA 500WVDC | | 0.11 |
| L10 | 02 | C 04 | 0.1 | UF | 8121-050-651-104M | ERIE | 19 | A13230Z23 | CAPACITOR,MONOLYTHIC 50VDC | | 0.19 |
| L10 | | C 05 | 0.1 | UF | 8121-050-651-104M | ERIE | 19 | A13230Z23 | CAPACITOR,MONOLYTHIC 50VDC | | 0.19 |
| L10 | 01 | C 06 | 0.047 | UF | 8121-050-651-473M | ERIE | 20 | A13230Z23 | CAPACITOR,MONOLYTHIC 50VDC | | 0.16 |
| L10 | 01 | C 07 | 330.0 | PF | CM04FA331J03 | ARCO | 21 | A13230Z23 | CAPACITOR MICA 500WVDC | | 0.19 |
| L10 | 01 | C 08 | 120.0 | PF | CM04FD121J03 | ARCO | 22 | A13230Z23 | CAPACITOR MICA 500WVDC | | 0.11 |
| L10 | 01 | C 09 | 24.0 | PF | CM04FD240J03 | ARCO | 23 | A13230Z23 | CAPACITOR MICA 500WVDC | | 0.11 |
| L10 | | C 11 | 1.0 | UF | 8131-050-651-105M | ERIE | 24 | A13230Z23 | CAPACITOR,MONOLYTHIC 50VDC | | 1.23 |
| L10 | 02 | C 10 | 1.0 | UF | 8131-050-651-105M | ERIE | 24 | A13230Z23 | CAPACITOR,MONOLYTHIC 50VDC | | 1.23 |
| L10 | 01 | C 13 | 150.0 | PF | CM04FD151J03 | ARCO | 25 | A13230Z23 | CAPACITOR MICA 500WVDC | | 0.11 |
| L10 | 01 | C 14 | 4700.0 | PF | 8121-050-651-472M | ERIE | 26 | A13230Z23 | CAPACITOR,MONOLYTHIC 50VDC | | 0.11 |
| L10 | 01 | L 01 | 47.0 | UH | 9230-60 | MILLER | 27 | A13230Z23 | CHOKE,RF MICRO MINATURE | | 0.28 |
| L10 | 01 | L 02 | 22.0 | UH | 9230-52 | MILLER | 28 | A13230Z23 | CHOKE,RF MICRO MINATURE | | 0.55 |
| L10 | 01 | L 03 | 3.3 | UH | 9230-32 | MILLER | 29 | A13230Z23 | CHOKE,RF MICRO MINATURE | | 0.46 |
| L10 | 02 | CR 01 | | | A2S800 | AERTECH | 30 | A13230Z23 | DIODE,SHOTTKEY | | 1.05 |
| L10 | | CR 02 | | | A2S800 | AERTECH | 30 | A13230Z23 | DIODE,SHOTTKEY | | 1.05 |
| L10 | 01 | CR 03 | | | 1N9378 | MOTOROLA | 31 | A13230Z23 | DIODE,REF TC 9.0V | | 4.58 |
| L10 | 01 | U 01 | | | LM318H | NAT SEMICOND | 32 | A13230Z23 | OP AMP | | 1.88 |
| L10 | 01 | U 02 | | | LH0033CG | NAT SEMICOND | 33 | A13230Z23 | AMPLIFIER,OP FET | | 14.49 |
| L10 | 01 | X | | | DP-5178 | ROB NUGENT | 34 | A13230Z23 | SOCKET,8 PIN TO-5 | | 1.98 |
| L10 | 01 | X | | | MP12100S | ROB NUGENT | 35 | A13230Z23 | SOCKET,12 PIN TO-8 SQUARE | | 0.28 |
| L10 | | EPCA | | | B13230AB08 | NRAO | 36 | A13230Z23 | DATA MODULATOR DRIVER | 4 | 3.00 |
| L10 | | DSH | | | C13230S07 | NRAO | 37 | A13230Z23 | DATA MODULATOR DRIVER | 2 | 0.00 |

*** TOTAL COST= 35.38 ***

*** TOTAL COST FOR MODULE L10 IS 1296.80 ***

## 7.0 L14: CENTRAL LOCAL OSCILLATOR FILTER - REVISION C

### 7.1 Modifications and Reasons

| Description of Modification | Reasons for Modification |
|---|---|
| 1. To Revision B: | |
| (a) Add a 1200 MHz BPF (4B120-1200/120-0 by K and L Microwave, Inc.) and a 20 dB pad between 1200 MHz 4-way power divider DC-2 and RF port of the mixer Z3. Also, add a 1800 MHz BPF (4B120-1800/180-0 by K and L Microwave, Inc.) between 1800 MHz 4-way power divider DC3 and L.O. port of the mixer. See Block Diagram D13230B12 (Fig. 7.1). | The two BPF's have been added to filter harmonics of 1200 and 1800 MHz going to the mixer. The 20 dB attenuator has been put in 1200 MHz path (note 1200 MHz is given to R port of the mixer) to reduce R port input of the mixer so that intermodulation products generated in the mixer are low (at least - 40 dBc compared to the desired product.) |
| (b) Modify output of Buffer Amplifier (A7) as shown below: | Design change of monitoring 600 MHz round trip phase digitally using 19.2 Hz offset and digital phase detector in new Central L.O. control modules Rev. C (L11C). |

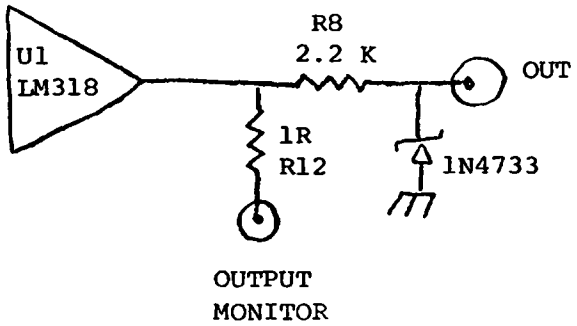

| REV | DATE | DRAWN BY | APPROV'D BY | DESCRIPTION |
|---|---|---|---|---|
| E | 12-3-77 | | | ADDED SIGNAL INFO ADDED ITEM G1 |
| D | 1-18-77 | | | REDRAWN; ADDED BPF 4B/20-1200/120-0 (FL2) ITEM G3; ATTENUATOR 20dB NARDA 4772-20 OR EQUIV (AT3) ITEM G5; BPF 4B/20-1800/180-0 FL3 ITEM G4. |

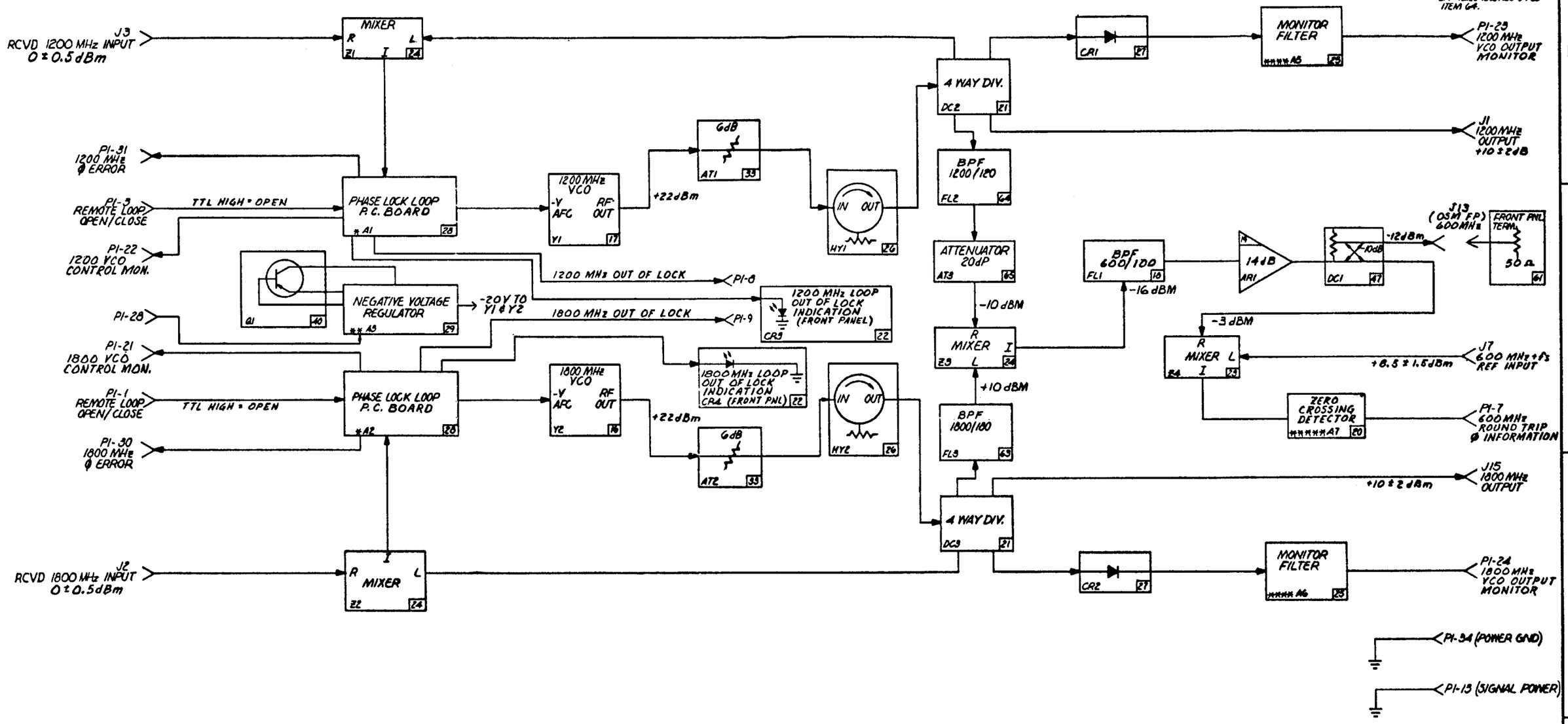


NOTES:
1. J1, J2, J3, J7 & J15 ARE ON REAR PANEL.
2. P1-42 PIN CONNECTOR
3. ⟶ ARROW INDICATES SIGNAL FLOW
4. * = ASSY DWG B13230P37, BOM A13230Z32, SCHEMATIC DWG D13230S13 REVISED COMPLETELY.
   ** = ASSY DWG B13230P38, BOM A13230Z28, SCHEMATIC DWG B13230S10.
   *** = ASSY DWG B13230P46, BOM A13230Z39, SCHEMATIC DWG B13230S18.
   **** = ASSY DWG C13230P39, BOM A13230Z31, SCHEMATIC DWG B13230S12.
   ***** = ASSY DWG B13230P24, BOM A13230Z24, SCHEMATIC DWG B13230S8, REVISED SLIGHTLY.
5. J19, OSM ON FRONT PANEL
6. [22 | 24] — ITEM NUMBERS PER BOM A13230Z33.
   REF DESIG. PER IEEE NO. 315 & NRAO SPEC.

FIGURE 7.1

| NEXT ASSY | USED ON |
|---|---|
| | A13230Z33 |

UNLESS OTHERWISE SPECIFIED DIMENSIONS ARE IN INCHES
TOLERANCES: ANGLES ±
3 PLACE DECIMALS (.XXX): ±
2 PLACE DECIMALS (.XX): ±
1 PLACE DECIMALS (.X): ±
MATERIAL:
FINISH:

VLA — L14 CENTRAL L.O. FILTER

TITLE: BLOCK DIAGRAM

NATIONAL RADIO ASTRONOMY OBSERVATORY
CHARLOTTESVILLE, VA. 22901

| | | |
|---|---|---|
| DRAWN BY | | DATE 6-4-75 |
| DESIGNED BY | | DATE 6-4-75 |
| APPROVED BY | | DATE 9-20-75 |

SHEET NUMBER | DRAWING NUMBER D13230B12 | REV. E | SCALE

2. To Revision C:

| | |
|---|---|
| Replace Phase Lock Loop PC Boards by new design boards and remove 1200/1800 MHz $\phi$-Error Indicator Board (A4). See enclosed description of the new circuit and adjustment procedure. | New Phase Lock Loop Boards contain VCO sweep circuit. The loop filter and lock indication functions have been separated out when input signal is present. However, when the signal not present the lock indication will be given by drifting of the loop integrator to one side. The 1200/1800 MHz $\phi$-Error Indicator circuit is no longer required to drive the LED's. |

## 7.2 List of Drawings Enclosed

| | | |
|---|---|---|
| 1. | Block Diagram Central L.O. Filter (Fig. 7.1) | D13230B12 |
| 2. | Phase Lock Loop PC Board Schematic (Fig. 7.2) | D13230S13 |
| 3. | Zero Crossing Detector Schematic (Fig. 7.3) | B13230S26 |
| 4. | Bill of Material Central L.O. Filter (Fig. 7.1) | A13230Z33 |
| 5. | Bill of Material Phase Lock Loop PC Board | A13230Z32 |

## 7.3 Phase Lock Loop

### 7.3.1 Phase-lock loop board - Reference Schematic D13230S13 (Fig. 7.2)

The phase-lock loop PC board contains loop DC amplifier and integrator. Loop out-of-lock indication circuit and VCO sweep circuit. When the VCO output frequency is different from the input reference signal a free running multivibrator output is connected to the input of the loop integrator. This makes the

| REV | DATE | DRAWN BY | APPRV'D BY | DESCRIPTION |
|---|---|---|---|---|
| B | 4-7-77 | | | REVISED & REDRAWN |
| C | 6-23-77 | | | "R34" WAS "R5", VALUE WAS 3.9K. R42 WAS 2.2K, R51 WAS 820Ω. REMOVED R32, R37, C10 & C11 |
| D | 9-27-77 | | | ADDED C15 |
| E | 11-28-77 | | | C15 WAS 9100 pF C16 WAS C15 C.O. № 770729-DSB-1 " " 770229-DSB " " 7612-5-DSB |
| F | 3-3-78 | | | CHG: R17 WAS 33K, R24 WAS 9.7M, R30 WAS 33K REMOVED R7-610K & R15-33K ADD: TABLE "B" |

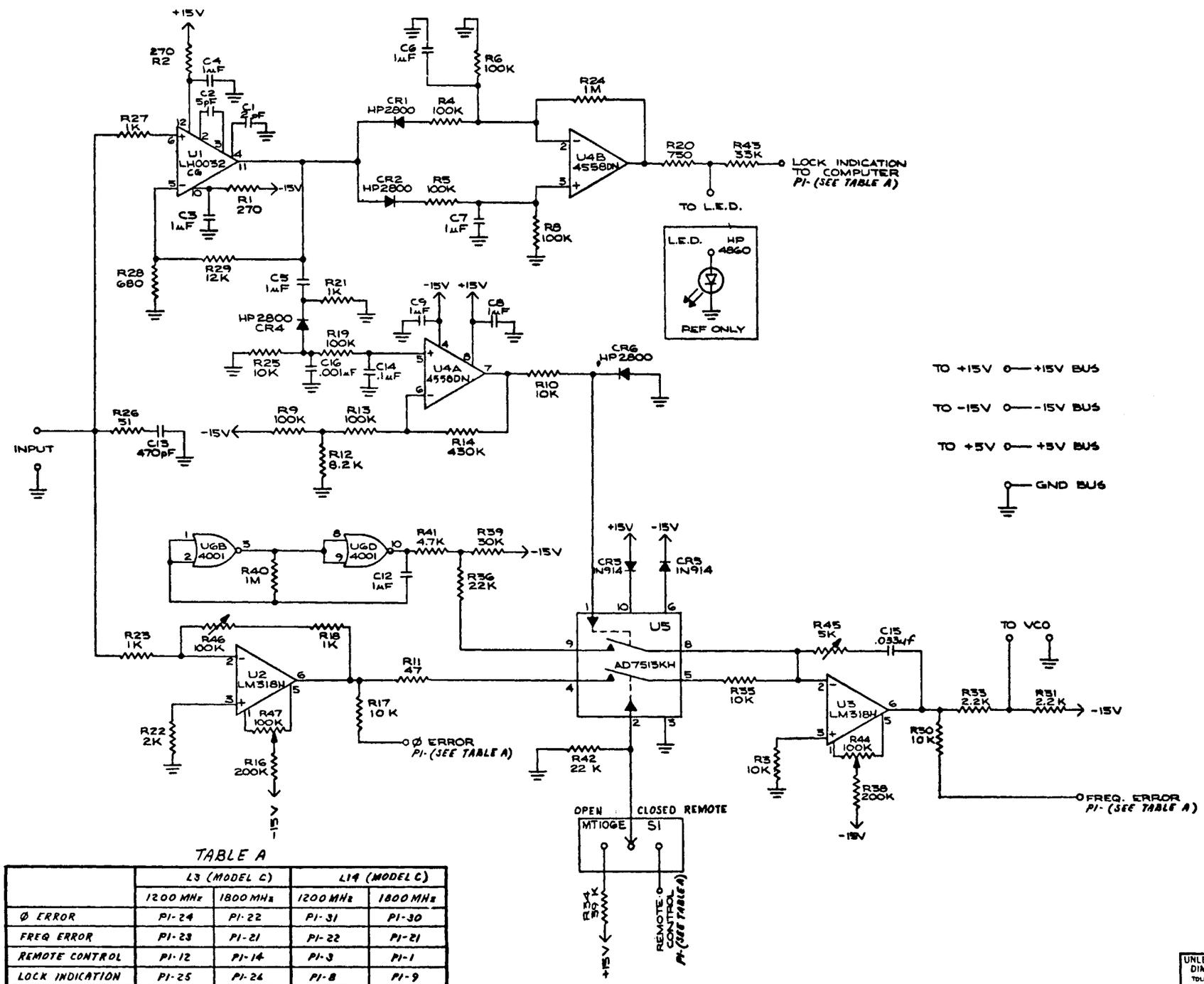


NOTES:
1. ALL MONITOR/CONTROL POINTS AND POWER SUPPLY CONNECTIONS GO THRU FILTER FEED THRUS (SPECTRUM CONTROL TYPE ) MOUNTED ON SHIELD OF AMP CONNECTOR P1

TABLE A

| | L3 (MODEL C) | | L14 (MODEL C) | |
|---|---|---|---|---|
| | 1200 MHz | 1800 MHz | 1200 MHz | 1800 MHz |
| Ø ERROR | P1-24 | P1-22 | P1-31 | P1-30 |
| FREQ ERROR | P1-23 | P1-21 | P1-22 | P1-21 |
| REMOTE CONTROL | P1-12 | P1-14 | P1-3 | P1-1 |
| LOCK INDICATION | P1-25 | P1-24 | P1-8 | P1-9 |

FIGURE 7.2

UNLESS OTHERWISE SPECIFIED DIMENSIONS ARE IN INCHES
TOLERANCES: ANGLES ±
3 PLACE DECIMALS (.XXX): ±
2 PLACE DECIMALS (.XX): ±
1 PLACE DECIMALS (.X): ±
MATERIAL:
FINISH:

NEXT ASSY | USED ON | A13230292

VLA — L3/L14 LO TRANSMITTER/CENTRAL LO FILTER

PHASE LOCK LOOP P.C. BOARD SCHEMATIC

NATIONAL RADIO ASTRONOMY OBSERVATORY
CHARLOTTESVILLE, VA. 22903

DRAWN BY | DATE 4-7-77
DESIGNED BY | DATE
APPROVED BY | DATE

SHEET NUMBER 1 OF 1 | DRAWING NUMBER D13230513 | REV F | SCALE NONE

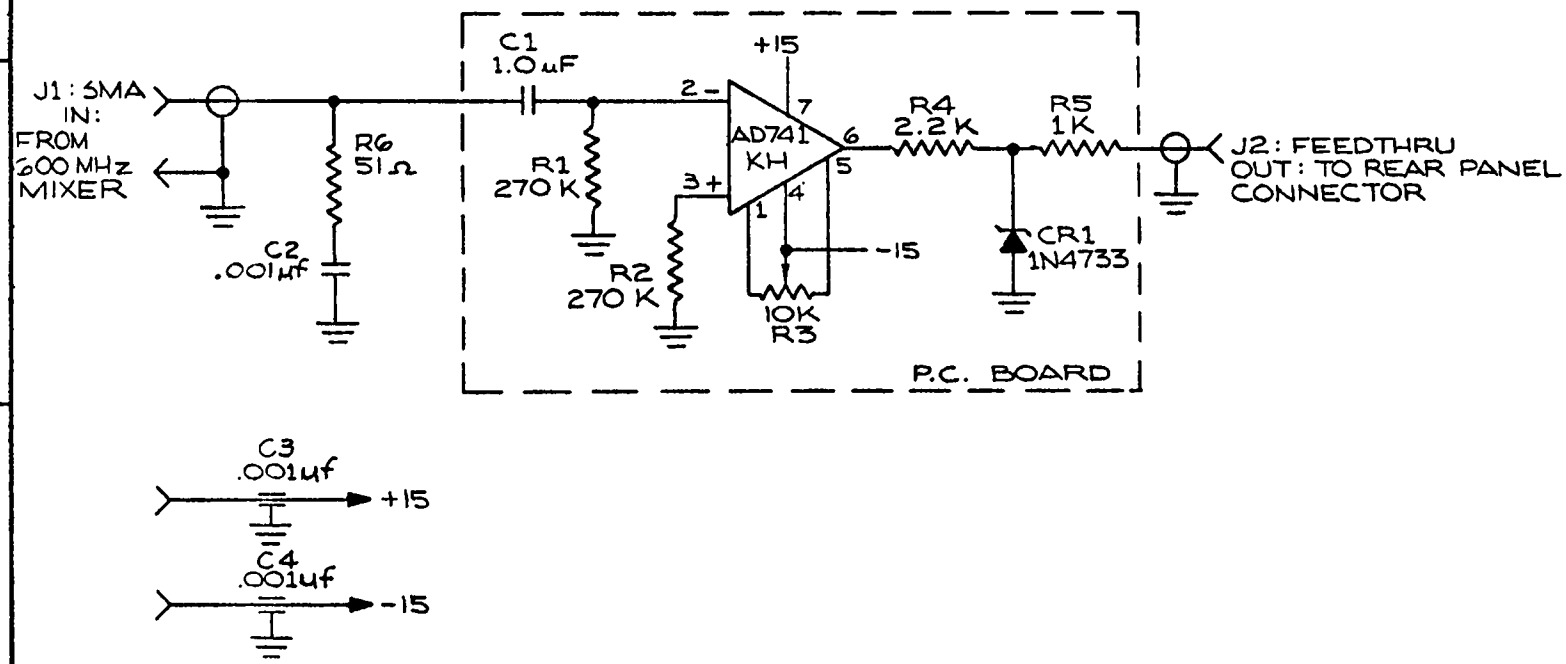


FIGURE 7-3

| REV. | DATE | DRAWN BY | APPRV'D BY | DESCRIPTION |
|---|---|---|---|---|

UNLESS OTHERWISE SPECIFIED DIMENSIONS ARE IN INCHES
TOLERANCES: ANGLES ±
3 PLACE DECIMALS (.XXX): ±
2 PLACE DECIMALS (.XX): ±
1 PLACE DECIMALS (.X): ±

MATERIAL:

FINISH:

| NEXT ASSY | USED ON |
|---|---|
| | |
| | A13230E73 |
| | A13290E72 |

VLA PROJECT: L14 CENTRAL LO FILTER

TITLE: ZERO CROSSING DETECTOR SCHEMATIC

NATIONAL RADIO ASTRONOMY OBSERVATORY
CHARLOTTESVILLE, VA. 22901

| | |
|---|---|
| DRAWN BY | DATE 9-7-77 |
| DESIGNED BY | DATE 8-15-77 |
| APPROVED BY | DATE |

SHEET NUMBER 1 OF 1 | DRAWING NUMBER B13230S26 | REV. | SCALE ~

40-22 24984-1 DRAWING

integrator output to vary in sawtooth fashion and sweeps the oscillator frequency. When the oscillator frequency is within the pulling range of the loop, the loop should acquire lock and the multivibrator signal to the integrator is cut off.

The output from the phase detector is terminated at the input of the phase-lock loop board by a 51 Ω (R26) in series with a 470 pF (C13). It is amplified by the operational amplifier (U2) to ±10 V p-p for a 2π radian phase change. It can be monitored at ϕ-error monitor point. The loop can be opened manually by setting the three position toggle switch S1 in open position or by an external +5 V signal at "REMOTE" in the remote position of the toggle switch. The loop open/close function is performed by one section of the dual SPST switch AD7513 (U5). The other section of the U5 is used to connect a free running multivibrator output to the input of the integrator U3 and is controlled by out-of-lock indication circuitry consisting of U1 and U4A.

When a beat signal is present at the input of the phase-lock board, output of the wideband amplifier U1 coupled by C5 to CR4 drives the amplifier U4A. Output of the amplifier U4A is used to connect the multivibrator output to the input of the integrator U3. Output of U1 is AC coupled to the diode CR4 for the following reason. In this type of circuit phase detector current to the integrator has to be larger than the sweep current to acquire lock. The phase detector output amplified by U2 may be such that it compensates the multivibrator output. In that case the phase detector output will vary at the same rate as that of the multivibrator and the loop will not be allowed to lock. Since the multivibrator rate is

very slow ($\lesssim$1 Hz), the U1 output to CR4 is cut off by the high pass filter C5R1. This causes to open the switch disconnecting the multivibrator output to integrator and the loop should lock. The multivibrator is made up of U6B and U6D and the time constant is determined by R40 and C12. Also the output of U1 is given to the amplifier U4B through diodes CR1 and CR2. When the phase-lock board input exceeds about 40 to 50 mV such that U1 output is able to drive the diodes CR1 or CR2 the U4B output will go high and switch 'ON' the LED to indicate that the loop is out-of-lock. Diodes CR3 and CR5 are connected in +15 V and -15 V DC power lines of the MOSFET analog switch AD7513 (U5) to protect it from damage due to transients.

The integrator consists of the operational amplifier U3 and the time-constants are formed by R35, R45 and C15. With the phase-lock loop set up properly and in lock the output of the integrator should be close to +4V. The resistors R33 and R31 change the integrator output swing from ±15 V to 0 to -15 V DC as required by the VCO. Also output of the integrator is monitored through a 10 k resistor (R30) and is labeled as 'FREQ. ERROR'. When no signal is present at the input of the phase-lock board U1 output is zero and the multivibrator output is not connected to the integrator and thus the integrator output is not sweeped. However depending on the DC offset bias conditions of the operational amplifiers U2 and U3 the integrator will swing to either +ve or -ve extreme (more than 13 V) and stay there. In this case though LED will not come 'ON' to indicate that the loop is not in lock but the integrator output can be used to indicate no signal condition. This is done by computer.

7.3.2 Loop parameters

For the theory of phase-lock loops and terminology used here refer to Phase-Lock Techniques by F.M. Gardner (John Wiley & Sons, Inc., New York 1966).

To minimize phase difference between the reference and signal a second order high gain integrator was chosen for the loop filter. Also as forced sweep is required for this system the loop parameters were optimized between good lock acquisition and low noise performance.

From the VCO data the mean value of the oscillator AFC port sensitivity is 0.5 MHz/Volt. Further the gain of the DC offset network at the output of the integrator is 0·5. Therefore the VCO gain constant

$$K_o = 0{\cdot}5 \times (0{\cdot}5 \times 10^6 \times 2\pi \text{ rad/Volt}) = 1{\cdot}57 \times 10^6 \text{ rad/Volt}$$

The gain setting of the DC amplifier U1 makes the phase detector output swing of ±10 V for a 2π radian change. Therefore at zero crossing the phase detector gain constant $K_D$ = 10 V/rad.

$$\therefore K_v = K_o K_D = 15{\cdot}7 \times 10^6$$

For best lock acquisition it is desirable to have as large a loop natural frequency ($\omega_n$) as possible. However noise and stability considerations force to limit the same. Consider the accuracy with which the loop tracks the input signal and the frequency over which the system will pull into lock. Assume a 0·1% ripple on the power supply tuning the VCO (say about 15 mV in 15 V DC) at 120 Hz. This will cause the VCO to deviate by about 7·5 kHz (500 x $10^3$ Hz/Volt x 0·015 V). From Equations

(4·12) and (4·13) on page 31 of Gardner we get the peak residual phase deviation.

$$\theta_e = \Delta\omega \cdot \omega_m / \omega_n^2$$

Where $\Delta\omega$ = peak frequency deviation and $\omega_m$ = modulating frequency. For $\theta_e < 0^\circ.1$ requires $\omega_n/2\pi \sim 25$ kHz. We chose $\omega_n/2\pi = 35$ kHz, i.e. $\omega_n = 220 \times 10^3 \frac{\text{rad}}{\text{sec}}$.

For good lock acquisition characteristics we chose a damping factor of 2 (see Gardner page 48). With the above parameters this will give (i) the pull in range (see Gardner page 45)

$$\Delta\omega_P/2\pi = \frac{1}{\pi}\sqrt{3\ \omega_n K_v}\ \text{Hz} = \left(\frac{1}{\pi}\right) \cdot \sqrt{2 \times 220 \times 10^3 \times 15{\cdot}7 \times 10^6} \sim 1\ \text{MHz}$$

and (ii) the lock in range (see Gardner page 43)

$$\Delta\omega_L/2\pi = 2\zeta\ \omega_n/2\pi = 140\ \text{kHz}.$$

Essentially these will be limited by the bandwidth of the first op. amplifiers U2. In practice the pull in range may be limited to ≈ 300 kHz.

From Gardner, page 9, Equation (2·10) we can express

$$\omega_n = \left(\frac{K_o K_D}{\tau_1}\right)^{\frac{1}{2}}$$

$$\zeta = \frac{\tau_2}{2} \cdot \left(\frac{K_o K_D}{\tau_1}\right)^{\frac{1}{2}}$$

where $\tau_1$ = R35·C15 and $\tau_2$ = R45·C15 in our case. Using $\omega_n = 220 \times 10^3$ rad/sec and $\zeta = 2$, we get $\tau_1 = 320\ \mu$S and $\tau_2 = 20\ \mu$S. For C15 = 0·033 μF this gives R35 = 10 kHz and R45 ~ 600 Ω.

## 7.4 Test and Adjustments

### 7.4.1 Testing and Adjustments of 1200 and 1800 MHz Oscillators

The test and adjustment procedure for both 1200 and 1800 MHz oscillators is similar and we will describe it for only 1200 MHz VCO. For adjusting mechanical tuning of these oscillators allow at least half an hour of oscillator warm-up time.

a) RF output power from the oscillator as measured using a power meter should be at least +22 dBm.

b) Connect the AFC port of the oscillator to a negative voltage power supply through a 10 k resistor. Measure the frequency of the oscillator using output at OMQ jack L3J8 with a spectrum analyzer. Adjust the mechanical tuning of the oscillator so that the frequency change with AFC voltage of zero to -13 V DC swings the oscillator frequency equally on both sides of the nominal frequency.

c) With the AFC port of the VCO still connected to the power supply measure the FM tuning slope of the oscillator. It should be about 0·4 to 0·6 MHz/Volt around -7 Volt at the AFC port.

d) Remove the power supply from the AFC port of the VCO and restore normal connection.

### 7.4.2 Procedure to Set-up Phase-lock Loop Boards - Reference Block Diagram D13230B12 and Circuit Schematic D13230S13

As in the case of adjustment of the oscillators procedure to set-up both 1200 and 1800 MHz phase-lock loop PC boards are similar. Here we will describe it for 1200 MHz phase-lock board with connections for 1800 MHz phase-lock adjustments in brackets.

a) With L14J3 (L14J2) terminated and U2 gain pot R46 set to maximum adjust U2 DC offset pot R47 so that the

DC output of the amplifier U2 as measured at '$\phi$-ERROR' monitor point is within ±100 mV.

b) Connect a 0 dBm signal at 1200 [1800] MHz from L9J12 (L9J13) module to L14J3 (L14J2).

c) Set the toggle switch S1 to open position and connect a variable negative voltage power supply through a 10 k resistor to AFC port of the oscillator. Measure the phase detector output beat frequency as measured at the input of the phase-lock board by an oscilloscope. Adjust the AFC port voltage so that the beat frequency is ≤10 kHz. The amplitude of the beat signal should be about 300 to 500 mV p-p.

d) Adjust the gain pot R46 such that the output of the operational amplifier U2 as measured at the '$\phi$-ERROR' monitor point is 20 V p-p. The DC offset should be within ±200 mV.

e) Check that the output of the integrator going to the oscillator is sweeping between 0 and about -13 V at approximately 1 Hz (the multivibrator output frequency rate). Otherwise check the multivibrator output at pin 10 of U6 by a scope. It should be switching between +0·8 V and +5 V at ~1 Hz.

f) Remove the DC power supply from the AFC port of the VCO and restore the phase-lock board output to the AFC port of the VCO. Check that the VCO frequency is swinging by about 2 MHz on either side of the oscillator nominal frequency at the multivibrator switching rate.

g) Set the switch S1 to 'REMOTE' position.

h) Apply a pulse generator output of 100 μs duration TTL +ve with ~100 cycle repetition rate to the 'REMOTE' terminal on the PC board. Adjust the integrator

damping pot R47 to damping as shown in Figure 7.4 by observing integrator output at VCO AFC terminal by an oscilloscope.

i) Remove the pulse generator signal.

j) Check DC offset voltage at '$\phi$-ERROR' monitor point with loop in lock. Adjust the bias pot on the integrator (R44) to get the offset to within ±100 mV.

k) Check the output of the integrator at the 'FREQ-ERROR' monitor point. It should be approximately +4 V.

l) Every time setting the switch S1 to OPEN and again to CLOSE the loop should lock back within one cycle of the multivibrator. Otherwise the damping pot R45 may have to be adjusted slightly.

m) Set the switch S1 to 'REMOTE' position.

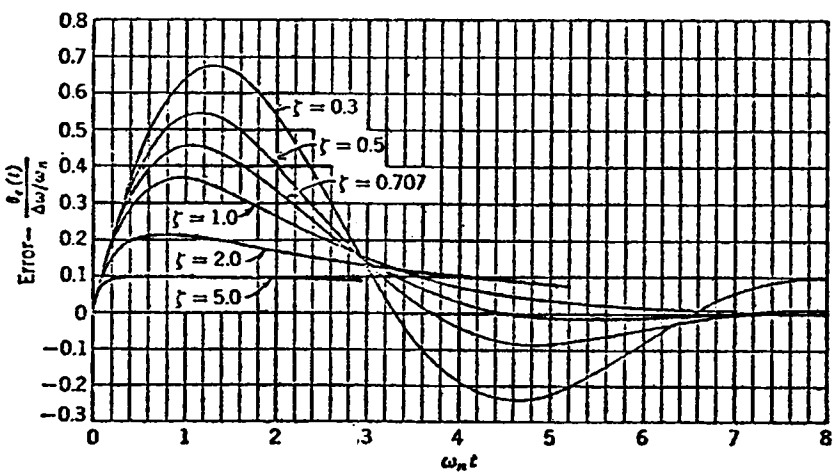


FIGURE 7.4 DAMPING ADJUSTMENT OF PHASE-LOCK LOOP PC BOARD. Correct damping as shown by $\zeta$ = 2.0 curve, underdamping as shown by $\zeta$ = 0.707 and overdamping as shown by $\zeta$ = 5.0 curves.

## 7.5 Input Output Connections

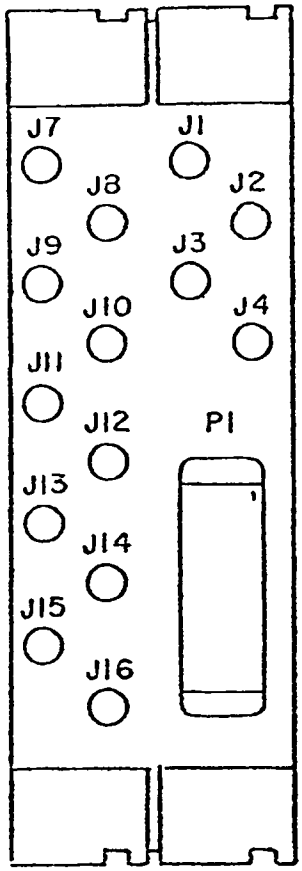


DOUBLE WIDE MODULE
(REAR VIEW)

| CONN | FUNCTION | |
|---|---|---|
| J1 | +10 ± 2 dBm @ 1200 MHz | Output |
| J2 | 0 ± 0.5 dBm @ 1800 MHz | Input |
| J3 | 0 ± 0.5 dBm @ 1200 MHz | Input |
| J4 | | |
| J7 | 10 ± 1 dBm @ 600 MHz + $f_s$ | Input |
| J8 | | |
| J9 | | |
| J10 | | |
| J11 | | |
| J12 | | |
| J13 | | |
| J14 | | |
| J15 | + 10 ± 2 dBm @ 1800 MHz | |
| J16 | | |

$f_s$ = 19.2 Hz

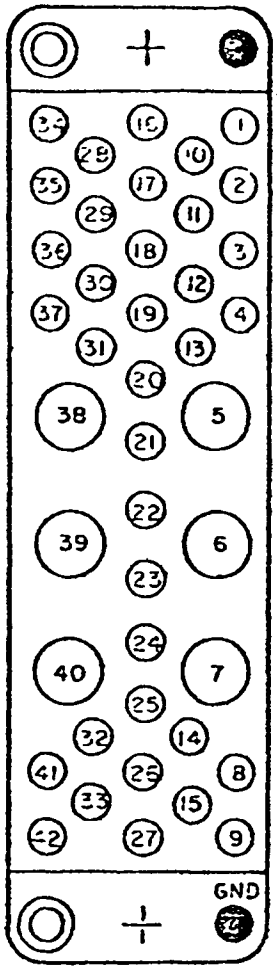


P1 (REAR VIEW)

| P1 | | | | | |
|---|---|---|---|---|---|
| PIN | FUNCTION | WIRE COLOR | PIN | FUNCTION | WIRE COLOR |
| 1 | OPEN 1800 PLL (Control, CMOS) | | 22 | 1200 VCO CONTROL VOLTAGE | |
| 2 | | | 23 | 1200 VCO POWER LEVEL | |
| 3 | OPEN 1200 PLL (CONTROL, CMOS) | | 24 | 1800 VCO POWER LEVEL | |
| 4 | | | 25 | | |
| 5 | ANTENNA T/H IN | CO-AXIAL | 26 | | |
| 6 | ANTENNA T/H OUT | CO-AXIAL | 27 | | |
| 7 | 600 MHz PHASE-ERROR | | 28 | −28VDC | GREEN |
| 8 | 1200 PLL Not LOCKED (Logic level) | | 29 | +28VDC* | GREY |
| 9 | 1800 PLL Not LOCKED (Logic level) | | 30 | 1800 PLL PHASE-ERROR | |
| 10 | +5VDC | ORANGE | 31 | 1200 PLL PHASE-ERROR | |
| 11 | −5VDC * | BROWN | 32 | | |
| 12 | | | 33 | | |
| 13 | HIGH QUALITY GROUND | | 34 | PWR. GROUND | BLACK |
| 14 | | | 35 | | |
| 15 | | | 36 | | |
| 16 | +15VDC | RED | 37 | | |
| 17 | −15VDC | YELLOW | 38 | | |
| 18 | | | 39 | | |
| 19 | | | 40 | | |
| 20 | | | 41 | | |
| 21 | 1800 VCO CONTROL VOLTAGE | | 42 | HIGH QUAL. GROUND | |

* INDICATES A FUNCTION NOT FOUND IN THIS MODULE.

## 7.6 Central L.O. Filter - Rev. C (L14C) Module Drawings, BOM's, etc.

| | |
|---|---|
| Block Diagram | D13230B12 |
| Phase Lock Loop PC Board Schematic | D13230S13 |
| Monitor Filter Schematic | B13230S12 |
| Negative Voltage Regulator Schematic | B13230S10 |
| Zero Crossing Detector Schematic | B13230S26 |

**Bills of Materials**

| | |
|---|---|
| Central L.O. Filter | A13230Z33 |
| Phase Lock Loop Boards | A13230Z32 |
| Monitor Filter | A13230Z31 |
| Buffer Amplifier | A13230Z24 |
| Zero Crossing Detector | A13230Z72, Z73 |
| Negative Voltage Regulator | A13230Z28 |

**Assembly Drawings**

| | |
|---|---|
| Phase Lock Loop PC Board | B13230P37 |
| Monitor Filter | C13230P39 |
| Negative Voltage Regulator | B13230P38 |
| Zero Crossing Detector | B13230P63 |
| Zero Crossing Detector PC Board | B13230P62 |

| Printed Circuit Boards, etc. | Art Work | Silk Screen | Mechanical |
|---|---|---|---|
| Module Front Panel | | B13230AA27 | B13230M35 |
| Phase Lock Loop PC Board | B13230AB11 | B13230AB30 | B13230M69 |
| Zero Crossing Detector PC Board | A13230AB35 | | B13231M20 |
| Negative Voltage Regulator PC Board | A13230AB05 | | B13230M63 |
| Module Wire List | | | A13230W10 |
| RF Inter-Connection Block Diagram | | | D13230B19 |

Mechanical

| | |
|---|---|
| Module Partition Plate | D13230M62 |
| Guide | B13050M04 |
| Panel, Rear | C13210M04 |
| Cover, Perforated | C13050M22-1 |
| Right and Left Side Plates | B13050M18 |
| Bar Support Top and Bottom | B13050M23 |
| Bar Support Top and Bottom Left | B13050M36 |
| Bracket, Mounting 4 Way Divider | B13230M43 |
| Monitor Filter Box | C13230M68 |
| Terminal Turret | B13230M98 |
| Buffer Amplifier Enclosure | B13230M40 |
| Mixer Mounting Bracket | |

# V L A  D A T A  L I S T I N G

MODULE: L14 PROJECT NO. 13240 DRAWING NO.: A13230Z33
DATA SET: CENTRAL LO FILTER BOM: CENTRAL LO FILTER C

| MOD-C/S-Q/M | | DESCR | VALUE | MFG. PART NO. | MANUFACTURER | ITEM# | BOM# | DESCRIPTION | | COST |
|---|---|---|---|---|---|---|---|---|---|---|
| L14 | | NST | | A13230Z33 | NRAO | 1 | A13230Z33 | CENTRAL LO FILTER | O | 0.00 |
| L14 | 1 | MPM | | B13230M35 | NRAO | 3 | A13230Z33 | PANEL, FRONT | A | 75.00 |
| L14 | 1 | MPM | | C13210M04 | NRAO | 4 | A13230Z33 | PANEL, REAR | E | 15.93 |
| L14 | 2 | MPM | | C13050M22-1 | NRAO | 5 | A13230Z33 | COVER,PERFORATED | K | 1.38 |
| L14 | 2 | MPM | | B13050M18 | NRAO | 6 | A13230Z33 | RIGHT & LEFT SIDE PLATES | H | 8.78 |
| L14 | 2 | MPM | | B13050M23 | NRAO | 7 | A13230Z33 | BAR, SUP. TOP & BOTTOM | G | 13.46 |
| L14 | 2 | MPM | | B13230M36 | NRAO | 8 | A13230Z33 | BAR SUP TOP & BTM LEFT | G | 16.91 |
| L14 | 1 | MPM | | B13230M43 | NRAO | 9 | A13230Z33 | BRKT, MTG 4WAY PWR DVDR | M | 2.97 |
| L14 | 1 | MPM | | D13230M62 | NRAO | 10 | A13230Z33 | PARTITION PLATE | M | 46.98 |
| L14 | 16 | H | | FHSS 6-32 X 0.375 | HW | 11 | A13230Z33 | FLAT HEAD SLOTTED SS SCREW | | 0.02 |
| L14 | 4 | H | | 47-10-204-10 | SOUTHCO | 12 | A13230Z33 | FASTNER,CAPTIVE | | 0.67 |
| L14 | 2 | H | | PHSS 10-32 X 0.125 | HW | 13 | A13230Z33 | PAN HEAD SLOTTED SS | | 0.02 |
| L14 | 16 | H | | PHSS 6-32 X 0.250 | HW | 14 | A13230Z33 | PAN HEAD SLOTTED SS | | 0.02 |
| L14 | 20 | H | | PHSS 4-40 X 0.250 | HW | 15 | A13230Z33 | PAN HEAD SLOTTED SS | | 0.02 |
| L14 | 1 | Y 02 | | SSC-0223(A) | SOLID ST TECH | 16 | A13230Z33 | OSCILLATOR 1800MHZ | | 322.00 |
| L14 | 1 | Y 01 | | SSC-0222(A) | SOLID ST TECH | 17 | A13230Z33 | OSCILLATOR 1200MHZ | | 322.00 |
| L14 | 1 | FL 01 | | 48120-600/100-0 | K&L MICROWAVE | 18 | A13230Z33 | FILTER,TUBULAR RF | | 45.00 |
| L14 | 1 | AR 01 | | UTA-8712M | AVANTEK | 19 | A13230Z33 | AMPLIFIER, 5MHZ-1GHZ | | 178.00 |
| L14 | 1 | DSA | | A13230Z24 | NRAO | 20 | A13230Z33 | BUFFER AMPLIFIER | O | 0.00 |
| L14 | 2 | DC 02 | | PD8304-4M | VECTRONICS | 21 | A13230Z33 | DIVIDER,PWR 4WAY 0.8-2GHZ | | 170.00 |
| L14 | 2 | DC 03 | | PD8304-4M | VECTRONICS | 21 | A13230Z33 | DIVIDER,PWR 4WAY 0.8-2GHZ | | 170.00 |
| L14 | 2 | CR 04 | | 5082-4860 | HEWLETT PACK | 22 | A13230Z33 | LED,W/RESISTOR,LIMIT | | 0.65 |
| L14 | 2 | CR 03 | | 5082-4860 | HEWLETT PACK | 22 | A13230Z33 | LED,W/RESISTOR,LIMIT | | 0.65 |
| L14 | 1 | Z 04 | | M1A | WATKINS JOHN | 23 | A13230Z33 | MIX,DBL BAL DC-1GHZ SMA CON | | 72.00 |
| L14 | 3 | Z 01 | | M1J | WATKINS JOHN | 24 | A13230Z33 | MIX,DBL BAL DC-1GHZ SMA CON | | 73.00 |
| L14 | 3 | Z 03 | | M1J | WATKINS JOHN | 24 | A13230Z33 | MIX,DBL BAL DC-1GHZ SMA CON | | 73.00 |
| L14 | 3 | Z 02 | | M1J | WATKINS JOHN | 24 | A13230Z33 | MIX,DBL BAL DC-1GHZ SMA CON | | 73.00 |
| L14 | 2 | NSA | | A13230Z31 | NRAO | 25 | A13230Z33 | MONITOR FILTER | O | 0.00 |
| L14 | 2 | HY 02 | | 101102660 | ADDINGTON LAB | 26 | A13230Z33 | ISOLATOR,TEE | | 190.00 |
| L14 | 2 | HY 01 | | 101102660 | ADDINGTON LAB | 26 | A13230Z33 | ISOLATOR,TEE | | 190.00 |
| L14 | 2 | CR 02 | | 20090 | OMNI-SPECTRA | 27 | A13230Z33 | DETECTOR 10MHZ-12.4GHZ | | 60.00 |
| L14 | 2 | CR 01 | | 20090 | OMNI-SPECTRA | 27 | A13230Z33 | DETECTOR 10MHZ-12.4GHZ | | 60.00 |
| L14 | 2 | NSA | | A13230Z32 | NRAO | 28 | A13230Z33 | PHASE LOCK LOOP PC BOARD | O | 0.00 |
| L14 | 1 | NSA | | A13230Z28 | NRAO | 29 | A13230Z33 | NEG. VOLT. REG. | O | 0.00 |
| L14 | 24 | P | | OSM-201-1A | OMNI-SPECTRA | 30 | A13230Z33 | CONNECTOR,PLUG 141SR | | 0.85 |
| L14 | 1 | MPP | | M12-A | K&L MICROWAVE | 31 | A13230Z33 | MOUNTING CLIP | | 0.05 |
| L14 | 5 | P | | OSM-531-3 | OMNI-SPECTRA | 32 | A13230Z33 | PLUG RT ANGL RG188 | | 3.57 |
| L14 | 02 | AT 01 | | FP87-06 | TEXSCAN | 33 | A13230Z33 | 6DB ATTENUATOR | | 35.00 |
| L14 | 2 | A | | FP87-06 | TEXSCAN | 33 | A13230Z33 | 6DB ATTENUATOR | | 35.00 |
| L14 | | AT 02 | | FP87-06 | TEXSCAN | 33 | A13230Z33 | 6DB ATTENUATOR | | 35.00 |
| L14 | 5 | J | | OMQ-3043-75 | OMNI-SPECTRA | 34 | A13230Z33 | JACK,BLKHD RF MOUNT 141SR | | 1.50 |
| L14 | 20 | W | | UT-141A | UNIFORM TUBES | 35 | A13230Z33 | CABLE,RF SEMIRIGID | | 0.45 |
| L14 | 03 | J | | OSM-218 | OMNI-SPECTRA | 36 | A13230Z33 | ADAPTER,STRGHT PLUG/PLUG | | 4.56 |
| L14 | 1 | P | | 202394-2 | AMP SPEC IND | 37 | A13230Z33 | HOOD,PIN(42 AND 50 BLOCK) | | 0.87 |
| L14 | 1 | P | | 204186-5 | AMP SPEC IND | 38 | A13230Z33 | BLOCK,PIN 42 MIXED | | 1.68 |
| L14 | 1 | J | | OSM-219 | OMNI-SPECTRA | 39 | A13230Z33 | ADAPTER,RT ANGL PLUG/JCK | | 6.92 |
| L14 | 1 | Q 01 | | D45C8 | GE | 40 | A13230Z33 | TRANSISTOR, POWER PNP | | 0.54 |
| L14 | 1 | P | | 201143-5 | AMP SPEC IND | 41 | A13230Z33 | COAX PIN | | 2.48 |
| L14 | 16 | P | | 204188-1 | AMP SPEC IND | 42 | A13230Z33 | CONTACT, PIN | | 0.23 |
| L14 | 2 | P | | 203964-6 | AMP SPEC IND | 43 | A13230Z33 | GUIDE SOCKET | | 0.21 |
| L14 | 1 | P | | 200833-4 | AMP SPEC IND | 44 | A13230Z33 | GUIDE PIN | | 0.23 |
| L14 | 1 | P | | 202514-1 | AMP SPEC IND | 45 | A13230Z33 | GROUND GUIDE PIN | | 0.42 |

TABLE 7.1: BOM: CENTRAL L.O. FILTER A13230Z33

| MOD-Q/S-Q/M | | DESCR | VALUE | MFG. PART NO. | MANUFACTURER | ITEM# | BOM# | DESCRIPTION | | COST |
|---|---|---|---|---|---|---|---|---|---|---|
| L14 | 17 | P | | OSM-201-L | OMNI-SPECTRA | 46 | A13230Z33 | CONNECTOR,PLUG 141SR | | 0.94 |
| L14 | 01 | DC 01 | | DCG-10-4 | ANZAC | 47 | A13230Z33 | COUPLER,10DB 30MHZ-1GHZ | | 64.00 |
| L14 | | DSH | | D13230B12 | NRAO | 48 | A13230Z33 | BLOCK DIAGRAM | 7 | 0.00 |
| L14 | | DWW | | A13230W10 | NRAO | 49 | A13230Z33 | CENTRAL LC FILTER | 8 | 0.00 |
| L14 | 1 | H | | PHSS 4-40 X 0.750 | HW | 50 | A13230Z33 | PAN HEAD SLOTTED SS | | 0.02 |
| L14 | 1 | H | | PHSS 4-40 X 0.375 | HW | 51 | A13230Z33 | PAN HEAD SLOTTED SS | | 0.02 |
| L14 | 1 | H | | HNS 4-40 | HW | 52 | A13230Z33 | HEX NUT,SS | | 0.02 |
| L14 | 20 | H | | SLWS 4-40 | HW | 53 | A13230Z33 | SPLIT-LOCK WASHER SS | | 0.02 |
| L14 | 20 | H | | SLWS 2-56 | HW | 54 | A13230Z33 | SPLIT-LOCK WASHER SS | | 0.02 |
| L14 | 20 | H | | PHSS 2-56 X 0.250 | HW | 55 | A13230Z33 | PAN HEAD SLOTTED SS | | 0.02 |
| L14 | 4 | MPN | | B13050M04 | NRAO | 56 | A13230Z33 | GUIDE | 2 | 0.20 |
| L14 | 16 | H | | SLWS 6-32 | HW | 57 | A13230Z33 | SPLIT-LOCK WASHER SS | | 0.02 |
| L14 | 4 | H | | PHSS 6-32 X 0.625 | HW | 58 | A13230Z33 | PAN HEAD SLOTTED SS | | 0.02 |
| L14 | 4 | H | | PHSS 6-32 X 0.875 | HW | 59 | A13230Z33 | PAN HEAD SLOTTED SS | | 0.02 |
| L14 | 01 | J 19 | | OSM-208A | OMNI-SPECTRA | 60 | A13230Z33 | JACK/JACK BLKHD FDTHRU | | 8.94 |
| L14 | 1 | AT | | 8018-6009 | SOLITRON | 61 | A13230Z33 | TERM,50 OHM W/CHAIN | | 12.05 |
| L14 | 01 | H | | 13888189GR | GE | 62 | A13230Z33 | HDWRE,TRANSISTOR MTG | | 0.05 |
| L14 | 01 | FL 03 | | 4B120-1800/180-0 | K&L MICROWAVE | 63 | A13230Z33 | FILTER,TUBULAR BP | | 45.00 |
| L14 | 01 | FL 02 | | 4B120-1200/120-0 | K&L MICROWAVE | 64 | A13230Z33 | FILTER,TUBULAR BP | | 45.00 |
| L14 | 01 | AT 03 | | FP87-20 | TEXSCAN | 65 | A13230Z33 | 20DB ATTENUATOR | | 35.00 |
| L14 | 2 | H | | HSHS 6-32 X 0.250 | HW | 66 | A13230Z33 | HEX-SOCKET HD SLOTTED SS | | 0.02 |
| L14 | 01 | H | | 1411-4 | H H SMITH | 66 | A13230Z33 | LUG,TERMINAL LOCK | | 0.15 |
| L14 | 70 | H | | SST1M-MP | PANDUIT | 67 | A13230Z33 | TIE WRAP,CABLE | | 0.02 |
| L14 | 01 | | | B13230AA27 | NRAO | 68 | A13230Z33 | FRONT PANEL SILKSCREEN | 5 | 0.00 |

*** TOTAL COST= 3960.17 ***

TABLE 7.1: BOM: CENTRAL L.O. FILTER A13230Z33 (CONT.)

CENTRAL L.O. FILTER (L14) V L A D A T A L I S T I N G

MODULE: L03 PROJECT NO. 13230 DRAWING NO.: A13230Z32
DATA SET: LO TRANSMITTER BOM: PHASE LOCK LOOP PC BOARD 0

| MOD-O/S-O/M | DESCR | VALUE | MFG. PART NO. | MANUFACTURER | ITEM# | BOM# | DESCRIPTION | COST |
|---|---|---|---|---|---|---|---|---|
| L03 | NSA | | A13230Z32 | NRAO | 01 | A13230Z32 | PHASE LOCK LOOP PC BOARD 0 | 0.00 |
| L03 | NSA | | A13230Z32 | NRAO | 01 | A13230Z32 | PHASE LOCK LOOP PC BOARD 0 | 0.00 |
| L03 00 | DSA | | B13230P37 | NRAO | 02 | A13230Z32 | PHASE LK LOOP PCB ASSY 1 | 0.00 |
| L03 00 | DSA | | B13230P37 | NRAO | 02 | A13230Z32 | PHASE LK LOOP PCB ASSY 1 | 0.00 |
| L03 01 | EPCD | | B13230M69 | NRAO | 03 | A13230Z32 | LO TRANS/CNT LO FILT DR D6 | 0.00 |
| L03 01 | EPCD | | B13230M69 | NRAO | 03 | A13230Z32 | LO TRANS/CNT LO FILT DR D6 | 0.00 |
| L03 | DSH | | D13230S13 | NRAO | 04 | A13230Z32 | PHASE LK LOOP PCB SCHEM 2 | 0.00 |
| L03 | DSH | | D13230S13 | NRAO | 04 | A13230Z32 | PHASE LK LOOP PCB SCHEM 2 | 0.00 |
| L03 | EPCA | | B13230AB11 | NRAO | 05 | A13230Z32 | PHASE LOCK LOOP 4 | 0.00 |
| L03 | EPCA | | B13230AB11 | NRAO | 05 | A13230Z32 | PHASE LOCK LOOP 4 | 0.00 |
| L03 | EPCS | | B13230AB30 | NRAO | 06 | A13230Z32 | PH LK LOOP PC BD SILKSCRN5 | 15.00 |
| L03 | EPCS | | B13230AB30 | NRAO | 06 | A13230Z32 | PH LK LOOP PC BD SILKSCRN5 | 15.00 |
| L03 02 | R 01 | 270.0 | RCR07 271-5S | | 07 | A13230Z32 | RESISTOR 1/4W | 0.06 |
| L03 02 | R 01 | 270.0 | RCR07 271-5S | | 07 | A13230Z32 | RESISTOR 1/4W | 0.06 |
| L03 | R 02 | 270.0 | RCR07 271-5S | | 07 | A13230Z32 | RESISTOR 1/4W | 0.06 |
| L03 | R 02 | 270.0 | RCR07 271-5S | | 07 | A13230Z32 | RESISTOR 1/4W | 0.06 |
| L03 04 | R 03 | 10.0 K | RCR07 103-5S | | 08 | A13230Z32 | RESISTOR 1/4W | 0.06 |
| L03 04 | R 03 | 10.0 K | RCR07 103-5S | | 08 | A13230Z32 | RESISTOR 1/4W | 0.06 |
| L03 | R 35 | 10.0 K | RCR07 103-5S | | 08 | A13230Z32 | RESISTOR 1/4W | 0.06 |
| L03 | R 10 | 10.0 K | RCR07 103-5S | | 08 | A13230Z32 | RESISTOR 1/4W | 0.06 |
| L03 | R 35 | 10.0 K | RCR07 103-5S | | 08 | A13230Z32 | RESISTOR 1/4W | 0.06 |
| L03 | R 25 | 10.0 K | RCR07 103-5S | | 08 | A13230Z32 | RESISTOR 1/4W | 0.06 |
| L03 | R 25 | 10.0 K | RCR07 103-5S | | 08 | A13230Z32 | RESISTOR 1/4W | 0.06 |
| L03 | R 10 | 10.0 K | RCR07 103-5S | | 08 | A13230Z32 | RESISTOR 1/4W | 0.06 |
| L03 07 | R 04 | 100.0 K | RCR07 104-5S | | 09 | A13230Z32 | RESISTOR 1/4W | 0.06 |
| L03 07 | R 04 | 100.0 K | RCR07 104-5S | | 09 | A13230Z32 | RESISTOR 1/4W | 0.06 |
| L03 | R 13 | 100.0 K | RCR07 104-5S | | 09 | A13230Z32 | RESISTOR 1/4W | 0.06 |
| L03 | R 19 | 100.0 K | RCR07 104-5S | | 09 | A13230Z32 | RESISTOR 1/4W | 0.06 |
| L03 | R 19 | 100.0 K | RCR07 104-5S | | 09 | A13230Z32 | RESISTOR 1/4W | 0.06 |
| L03 | R 13 | 100.0 K | RCR07 104-5S | | 09 | A13230Z32 | RESISTOR 1/4W | 0.06 |
| L03 | R 09 | 100.0 K | RCR07 104-5S | | 09 | A13230Z32 | RESISTOR 1/4W | 0.06 |
| L03 | R 05 | 100.0 K | RCR07 104-5S | | 09 | A13230Z32 | RESISTOR 1/4W | 0.06 |
| L03 | R 05 | 100.0 K | RCR07 104-5S | | 09 | A13230Z32 | RESISTOR 1/4W | 0.06 |
| L03 | R 04 | 100.0 K | RCR07 104-5S | | 09 | A13230Z32 | RESISTOR 1/4W | 0.06 |
| L03 | R 08 | 100.0 K | RCR07 104-5S | | 09 | A13230Z32 | RESISTOR 1/4W | 0.06 |
| L03 | R 09 | 100.0 K | RCR07 104-5S | | 09 | A13230Z32 | RESISTOR 1/4W | 0.06 |
| L03 | R 06 | 100.0 K | RCR07 104-5S | | 09 | A13230Z32 | RESISTOR 1/4W | 0.06 |
| L03 | R 08 | 100.0 K | RCR07 104-5S | | 09 | A13230Z32 | RESISTOR 1/4W | 0.06 |
| L03 01 | R 07 | ~~510.0 K~~ | ~~RCR07 514-5S~~ | Deleted | 10 | A13230Z32 | RESISTOR 1/4W | 0.06 |
| L03 01 | R 07 | ~~510.0 K~~ | ~~RCR07 514-5S~~ | Deleted | 10 | A13230Z32 | RESISTOR 1/4W | 0.06 |
| L03 01 | R 11 | 47.0 | RCR07 470-5S | | 11 | A13230Z32 | RESISTOR 1/4W | 0.06 |
| L03 01 | R 11 | 47.0 | RCR07 470-5S | | 11 | A13230Z32 | RESISTOR 1/4W | 0.06 |
| L03 01 | R 12 | 8.2 K | RCR07 822-5S | | 12 | A13230Z32 | RESISTOR 1/4W | 0.06 |
| L03 01 | R 12 | 8.2 K | RCR07 822-5S | | 12 | A13230Z32 | RESISTOR 1/4W | 0.06 |
| L03 01 | R 14 | 430.0 K | RCR07 434-5S | | 13 | A13230Z32 | RESISTOR 1/4W | 0.06 |
| L03 01 | R 14 | 430.0 K | RCR07 434-5S | | 13 | A13230Z32 | RESISTOR 1/4W | 0.06 |
| L03 | R 17 | 10k ~~33.0 K~~ | ~~RCR07 333-5S~~ | | 14 | A13230Z32 | RESISTOR 1/4W | 0.06 |
| L03 | R 17 | 10k ~~33.0 K~~ | ~~RCR07 333-5S~~ | | 14 | A13230Z32 | RESISTOR 1/4W | 0.06 |
| L03 04 | R 15 | ~~33.0 K~~ | ~~RCR07 333-5S~~ | Deleted | 14 | A13230Z32 | RESISTOR 1/4W | 0.06 |
| L03 04 | R 15 | ~~33.0 K~~ | ~~RCR07 333-5S~~ | Deleted | 14 | A13230Z32 | RESISTOR 1/4W | 0.06 |
| L03 | R 43 | 33.0 K | RCR07 333-5S | | 14 | A13230Z32 | RESISTOR 1/4W | 0.06 |
| L03 | R 43 | 33.0 K | RCR07 333-5S | | 14 | A13230Z32 | RESISTOR 1/4W | 0.06 |

TABLE 7.2: BOM: PHASE-LOCK LOOP PC BOARD A13230Z32

| MOD-Q/S-Q/N | | DESCR | | VALUE | | MFG. PART NO. | MANUFACTURER | ITEM# | BOM# | DESCRIPTION | COST |
|---|---|---|---|---|---|---|---|---|---|---|---|
| L03 | | R | 30 | 10k ~~33.0~~ | K | ~~RCR07-333-5S~~ | | 14 | A13230Z32 | RESISTOR 1/4W | 0.06 |
| L03 | | R | 30 | 10k ~~33.0~~ | K | ~~RCR07-333-5S~~ | | 14 | A13230Z32 | RESISTOR 1/4W | 0.06 |
| L03 | | R | 27 | 1.0 | K | RCR07 102-5S | | 15 | A13230Z32 | RESISTOR 1/4W | 0.06 |
| L03 | | R | 21 | 1.0 | K | RCR07 102-5S | | 15 | A13230Z32 | RESISTOR 1/4W | 0.06 |
| L03 | 04 | R | 18 | 1.0 | K | RCR07 102-5S | | 15 | A13230Z32 | RESISTOR 1/4W | 0.06 |
| L03 | 04 | R | 18 | 1.0 | K | RCR07 102-5S | | 15 | A13230Z32 | RESISTOR 1/4W | 0.06 |
| L03 | | R | 23 | 1.0 | K | RCR07 102-5S | | 15 | A13230Z32 | RESISTOR 1/4W | 0.06 |
| L03 | | R | 23 | 1.0 | K | RCR07 102-5S | | 15 | A13230Z32 | RESISTOR 1/4W | 0.06 |
| L03 | | R | 27 | 1.0 | K | RCR07 102-5S | | 15 | A13230Z32 | RESISTOR 1/4W | 0.06 |
| L03 | | R | 21 | 1.0 | K | RCR07 102-5S | | 15 | A13230Z32 | RESISTOR 1/4W | 0.06 |
| L03 | 02 | R | 16 | 200.0 | K | RCR07 204-5S | | 16 | A13230Z32 | RESISTOR 1/4W | 0.06 |
| L03 | 02 | R | 16 | 200.0 | K | RCR07 204-5S | | 16 | A13230Z32 | RESISTOR 1/4W | 0.06 |
| L03 | | R | 38 | 200.0 | K | RCR07 204-5S | | 16 | A13230Z32 | RESISTOR 1/4W | 0.06 |
| L03 | | R | 38 | 200.0 | K | RCR07 204-5S | | 16 | A13230Z32 | RESISTOR 1/4W | 0.06 |
| L03 | 01 | R | 20 | 750.0 | | RCR07 751-5S | | 17 | A13230Z32 | RESISTOR 1/4W | 0.06 |
| L03 | 01 | R | 20 | 750.0 | | RCR07 751-5S | | 17 | A13230Z32 | RESISTOR 1/4W | 0.06 |
| L03 | 01 | R | 22 | 2.0 | K | RCR07 202-5S | | 18 | A13230Z32 | RESISTOR 1/4W | 0.06 |
| L03 | 01 | R | 22 | 2.0 | K | RCR07 202-5S | | 18 | A13230Z32 | RESISTOR 1/4W | 0.06 |
| L03 | 01 | R | 24 | 1M ~~4.7~~ | ~~M~~ | ~~RCR07-475-5S~~ | | 19 | A13230Z32 | RESISTOR 1/4W | 0.06 |
| L03 | 01 | R | 24 | 1M ~~4.7~~ | ~~M~~ | ~~RCR07-475-5S~~ | | 19 | A13230Z32 | RESISTOR 1/4W | 0.06 |
| L03 | 01 | R | 26 | 51.0 | | RCR07 510-5S | | 20 | A13230Z32 | RESISTOR 1/4W | 0.06 |
| L03 | 01 | R | 26 | 51.0 | | RCR07 510-5S | | 20 | A13230Z32 | RESISTOR 1/4W | 0.06 |
| L03 | 01 | R | 28 | 680.0 | | RCR07 681-5S | | 21 | A13230Z32 | RESISTOR 1/4W | 0.06 |
| L03 | 01 | R | 28 | 680.0 | | RCR07 681-5S | | 21 | A13230Z32 | RESISTOR 1/4W | 0.06 |
| L03 | 01 | R | 29 | 12.0 | K | RCR07 123-5S | | 22 | A13230Z32 | RESISTOR 1/4W | 0.06 |
| L03 | 01 | R | 29 | 12.0 | K | RCR07 123-5S | | 22 | A13230Z32 | RESISTOR 1/4W | 0.06 |
| L03 | 02 | R | 33 | 2.2 | K | RCR07 222-5S | | 23 | A13230Z32 | RESISTOR 1/4W | 0.06 |
| L03 | 02 | R | 31 | 2.2 | K | RCR07 222-5S | | 23 | A13230Z32 | RESISTOR 1/4W | 0.06 |
| L03 | 02 | R | 31 | 2.2 | K | RCR07 222-5S | | 23 | A13230Z32 | RESISTOR 1/4W | 0.06 |
| L03 | 02 | R | 33 | 2.2 | K | RCR07 222-5S | | 23 | A13230Z32 | RESISTOR 1/4W | 0.06 |
| L03 | 02 | R | 36 | 22.0 | K | RCR07 223-5S | | 25 | A13230Z32 | RESISTOR 1/4W | 0.06 |
| L03 | 01 | R | 36 | 22.0 | K | RCR07 223-5S | | 25 | A13230Z32 | RESISTOR 1/4W | 0.06 |
| L03 | | R | 42 | 22.0 | K | RCR07 223-5S | | 25 | A13230Z32 | RESISTOR 1/4W | 0.06 |
| L03 | | R | 42 | 22.0 | K | RCR07 223-5S | | 25 | A13230Z32 | RESISTOR 1/4W | 0.06 |
| L03 | 01 | R | 34 | 39.0 | K | RCR07 393-5S | | 26 | A13230Z32 | RESISTOR 1/4W | 0.06 |
| L03 | 01 | R | 34 | 39.0 | K | RCR07 393-5S | | 26 | A13230Z32 | RESISTOR 1/4W | 0.06 |
| L03 | 01 | R | 39 | 30.0 | K | RCR07 303-5S | | 28 | A13230Z32 | RESISTOR 1/4W | 0.06 |
| L03 | 01 | R | 39 | 30.0 | K | RCR07 303-5S | | 28 | A13230Z32 | RESISTOR 1/4W | 0.06 |
| L03 | 01 | R | 40 | 1.0 | M | RCR07 105-5S | | 29 | A13230Z32 | RESISTOR 1/4W | 0.06 |
| L03 | 01 | R | 40 | 1.0 | M | RCR07 105-5S | | 29 | A13230Z32 | RESISTOR 1/4W | 0.06 |
| L03 | 01 | R | 41 | 4.7 | K | RCR07 472-5S | | 30 | A13230Z32 | RESISTOR 1/4W | 0.06 |
| L03 | 01 | R | 41 | 4.7 | K | RCR07 472-5S | | 30 | A13230Z32 | RESISTOR 1/4W | 0.06 |
| L03 | 01 | C | 01 | 2.0 | PF | DM10 020D | ARCO | 31 | A13230Z32 | CAPACITOR MICA 500WVDC | 0.14 |
| L03 | 01 | C | 01 | 2.0 | PF | DM10 020D | ARCO | 31 | A13230Z32 | CAPACITOR MICA 500WVDC | 0.14 |
| L03 | 01 | C | 02 | 5.0 | PF | DM10 050D | ARCO | 32 | A13230Z32 | CAPACITOR MICA 500WVDC | 0.14 |
| L03 | 01 | C | 02 | 5.0 | PF | DM10 050D | ARCO | 32 | A13230Z32 | CAPACITOR MICA 500WVDC | 0.14 |
| L03 | | C | 05 | 1.0 | UF | 8131-050-651-105M | ERIE | 33 | A13230Z32 | CAPACITOR,MONOLYTHIC 50VDC | 1.23 |
| L03 | | C | 07 | 1.0 | UF | 8131-050-651-105M | ERIE | 33 | A13230Z32 | CAPACITOR,MONOLYTHIC 50VDC | 1.23 |
| L03 | | C | 06 | 1.0 | UF | 8131-050-651-105M | ERIE | 33 | A13230Z32 | CAPACITOR,MONOLYTHIC 50VDC | 1.23 |
| L03 | | C | 04 | 1.0 | UF | 8131-050-651-105M | ERIE | 33 | A13230Z32 | CAPACITOR,MONOLYTHIC 50VDC | 1.23 |
| L03 | | C | 09 | 1.0 | UF | 8131-050-651-105M | ERIE | 33 | A13230Z32 | CAPACITOR,MONOLYTHIC 50VDC | 1.23 |
| L03 | | C | 12 | 1.0 | UF | 8131-050-651-105M | ERIE | 33 | A13230Z32 | CAPACITOR,MONOLYTHIC 50VDC | 1.23 |
| L03 | 00 | C | 03 | 1.0 | UF | 8131-050-651-105M | ERIE | 33 | A13230Z32 | CAPACITOR,MONOLYTHIC 50VDC | 1.23 |
| L03 | | C | 08 | 1.0 | UF | 8131-050-651-105M | ERIE | 33 | A13230Z32 | CAPACITOR,MONOLYTHIC 50VDC | 1.23 |
| L03 | | C | 12 | 1.0 | UF | 8131-050-651-105M | ERIE | 33 | A13230Z32 | CAPACITOR,MONOLYTHIC 50VDC | 1.23 |
| L03 | 00 | C | 03 | 1.0 | UF | 8131-050-651-105M | ERIE | 33 | A13230Z32 | CAPACITOR,MONOLYTHIC 50VDC | 1.23 |

TABLE 7.2: BOM: PHASE-LOCK LOOP PC BOARD A13230Z32 (CONT.)

TABLE 7.2: BOM: PHASE-LOCK LOOP PC BOARD A13230Z32 (CONT.)

| MOD-Q/S-Q/M | | DESCR | VALUE | MFG. PART NO. | MANUFACTURER | ITEM# | BOM# | DESCRIPTION | COST |
|---|---|---|---|---|---|---|---|---|---|
| L03 | | C 07 | 1.0 UF | 8131-050-651-105M | ERIE | 33 | A13230Z32 | CAPACITOR,MONOLYTHIC 50VDC | 1.23 |
| L03 | | C 06 | 1.0 UF | 8131-050-651-105M | ERIE | 33 | A13230Z32 | CAPACITOR,MONOLYTHIC 50VDC | 1.23 |
| L03 | | C 08 | 1.0 UF | 8131-050-651-105M | ERIE | 33 | A13230Z32 | CAPACITOR,MONOLYTHIC 50VDC | 1.23 |
| L03 | | C 05 | 1.0 UF | 8131-050-651-105M | ERIE | 33 | A13230Z32 | CAPACITOR,MONOLYTHIC 50VDC | 1.23 |
| L03 | | C 09 | 1.0 UF | 8131-050-651-105M | ERIE | 33 | A13230Z32 | CAPACITOR,MONOLYTHIC 50VDC | 1.23 |
| L03 | | C 16 | | 8101-100-651-102M | ERIE | 34 | A13230Z32 | CAPACITOR,MONOLYTHIC 100V | 0.26 |
| L03 | | C 16 | | 8101-100-651-102M | ERIE | 34 | A13230Z32 | CAPACITOR,MONOLYTHIC 100V | 0.26 |
| L03 | 01 | C 13 | 470.0 PF | 8101-050-651-471M | ERIE | 35 | A13230Z32 | 470PF,50WVDC,CAP. | .33 |
| L03 | 01 | C 13 | 470.0 PF | 8101-050-651-471M | ERIE | 35 | A13230Z32 | 470PF,50WVDC,CAP. | .33 |
| L03 | 01 | C 14 | 0.1 UF | 8121-050-651-104M | ERIE | 36 | A13230Z32 | CAPACITOR,MONOLYTHIC 50VDC | 0.19 |
| L03 | 01 | C 14 | 0.1 UF | 8121-050-651-104M | ERIE | 36 | A13230Z32 | CAPACITOR,MONOLYTHIC 50VDC | 0.19 |
| L03 | 01 | C 15 | 0.033UF | 617.4 | MIAL/USA | 37 | A13230Z32 | CAPACITOR,POLYST 600WDC | 0.52 |
| L03 | 01 | C 15 | 0.033UF | 617.4 | MIAL/USA | 37 | A13230Z32 | CAPACITOR,POLYST 600WDC | 0.52 |
| L03 | 04 | CR 01 | | A2S800 | AERTECH | 38 | A13230Z32 | DIODE,SHOTTKEY | 1.05 |
| L03 | | CR 06 | | A2S800 | AERTECH | 38 | A13230Z32 | DIODE,SHOTTKEY | 1.05 |
| L03 | 04 | CR 01 | | A2S800 | AERTECH | 38 | A13230Z32 | DIODE,SHOTTKEY | 1.05 |
| L03 | | CR 02 | | A2S800 | AERTECH | 38 | A13230Z32 | DIODE,SHOTTKEY | 1.05 |
| L03 | | CR 02 | | A2S800 | AERTECH | 38 | A13230Z32 | DIODE,SHOTTKEY | 1.05 |
| L03 | | CR 04 | | A2S800 | AERTECH | 38 | A13230Z32 | DIODE,SHOTTKEY | 1.05 |
| L03 | | CR 04 | | A2S800 | AERTECH | 38 | A13230Z32 | DIODE,SHOTTKEY | 1.05 |
| L03 | | CR 06 | | A2S800 | AERTECH | 38 | A13230Z32 | DIODE,SHOTTKEY | 1.05 |
| L03 | 02 | CR 03 | | 1N914B | GE | 39 | A13230Z32 | DIODE,GENL PUR | 0.07 |
| L03 | | CR 05 | | 1N914B | GE | 39 | A13230Z32 | DIODE,GENL PUR | 0.07 |
| L03 | 02 | CR 03 | | 1N914B | GE | 39 | A13230Z32 | DIODE,GENL PUR | 0.07 |
| L03 | | CR 05 | | 1N914B | GE | 39 | A13230Z32 | DIODE,GENL PUR | 0.07 |
| L03 | 01 | U 01 | | LH0032CG | NAT SEMICOND | 40 | A13230Z32 | OP AMP,FET ULTRA FAST | 17.38 |
| L03 | 01 | U 01 | | LH0032CG | NAT SEMICOND | 40 | A13230Z32 | OP AMP,FET ULTRA FAST | 17.38 |
| L03 | 02 | U 02 | | LM318H | NAT SEMICOND | 41 | A13230Z32 | OP AMP | 1.88 |
| L03 | | U 03 | | LM318H | NAT SEMICOND | 41 | A13230Z32 | OP AMP | 1.88 |
| L03 | | U 03 | | LM318H | NAT SEMICOND | 41 | A13230Z32 | OP AMP | 1.88 |
| L03 | 02 | U 02 | | LM318H | NAT SEMICOND | 41 | A13230Z32 | OP AMP | 1.88 |
| L03 | 01 | U 04 | | RC-4558DN | RAYTHEON | 42 | A13230Z32 | OP AMP DUAL HIGH GAIN | 0.45 |
| L03 | 01 | U 04 | | RC-4558DN | RAYTHEON | 42 | A13230Z32 | OP AMP DUAL HIGH GAIN | 0.45 |
| L03 | 01 | U 05 | | AD7513KH | ANALOG DEV | 43 | A13230Z32 | SWITCH,ANALOG | 3.50 |
| L03 | 01 | U 05 | | AD7513KH | ANALOG DEV | 43 | A13230Z32 | SWITCH,ANALOG | 3.50 |
| L03 | 01 | U 06 | | CD4001AE | RCA | 44 | A13230Z32 | COS/MOS NOR GATE | 0.23 |
| L03 | 01 | U 06 | | CD4001AE | RCA | 44 | A13230Z32 | COS/MOS NOR GATE | 0.23 |
| L03 | 01 | X | | MP12100S | ROB NUGENT | 45 | A13230Z32 | SOCKET,12 PIN TO-8 SQUARE | 0.28 |
| L03 | 01 | X | | MP12100S | ROB NUGENT | 45 | A13230Z32 | SOCKET,12 PIN TO-8 SQUARE | 0.28 |
| L03 | 02 | X | | SD-5178 | ROB NUGENT | 46 | A13230Z32 | SOCKET,PC BD 8 PIN TO-5 | 1.94 |
| L03 | 02 | X | | SD-5178 | ROB NUGENT | 46 | A13230Z32 | SOCKET,PC BD 8 PIN TO-5 | 1.94 |
| L03 | 01 | X | | ICN-083-S3 | ROB NUGENT | 47 | A13230Z32 | SOCKET,8 PIN DIL | 0.25 |
| L03 | 01 | X | | ICN-083-S3 | ROB NUGENT | 47 | A13230Z32 | SOCKET,8 PIN DIL | 0.25 |
| L03 | 01 | X | | DP-51710-T-23 | ROB NUGENT | 48 | A13230Z32 | SOCKET, 10 PIN TO-5 | 3.18 |
| L03 | 01 | X | | DP-51710-T-23 | ROB NUGENT | 48 | A13230Z32 | SOCKET, 10 PIN TO-5 | 3.18 |
| L03 | 01 | X | | ICN-143-S3 | ROB NUGENT | 49 | A13230Z32 | SOCKET,14 PIN DIL | 0.27 |
| L03 | 01 | X | | ICN-143-S3 | ROB NUGENT | 49 | A13230Z32 | SOCKET,14 PIN DIL | 0.27 |
| L03 | 12 | E | | 1502-2 | KEYSTONE | 51 | A13230Z32 | TERMINAL,TURRET 1/16 STK | 0.02 |
| L03 | 12 | E | | 1502-2 | KEYSTONE | 51 | A13230Z32 | TERMINAL,TURRET 1/16 STK | 0.02 |
| L03 | 04 | H | | 1589-2 | KEYSTONE | 52 | A13230Z32 | STANDOFF,SWAGE 2-56 1/8H | 0.06 |
| L03 | 04 | H | | 1589-2 | KEYSTONE | 52 | A13230Z32 | STANDOFF,SWAGE 2-56 1/8H | 0.06 |
| L03 | 01 | S 01 | | MTM106E-PC | ALCO | 53 | A13230Z32 | SWITCH, TOGGLE PC | 1.61 |
| L03 | 01 | S 01 | | MTM106E-PC | ALCO | 53 | A13230Z32 | SWITCH, TOGGLE PC | 1.61 |
| L03 | | P 44 | | 3339P-1-104 | BOURNS | 54 | A13230Z32 | POT.CERMET,4TURN,+-10% | 1.98 |
| L03 | 03 | P 44 | | 3339P-1-104 | BOURNS | 54 | A13230Z32 | POT.CERMET,4TURN,+-10% | 1.98 |
| L03 | | P 47 | | 3339P-1-104 | BOURNS | 54 | A13230Z32 | POT.CERMET,4TURN,+-10% | 1.98 |

| MOD-Q/S-Q/M | | DESCR | VALUE | MFG. PART NO. | MANUFACTURER | ITEM# | BOM# | DESCRIPTION | COST |
|---|---|---|---|---|---|---|---|---|---|
| L03 | | R 47 | | 3339P-1-104 | BOURNS | 54 | A13230Z32 | POT.CERMET,4TURN,+-10% | 1.98 |
| L03 | | R 46 | | 3339P-1-104 | BOURNS | 54 | A13230Z32 | POT.CERMET,4TURN,+-10% | 1.98 |
| L03 | 01 | R 45 | | 3339P-1-502 | BOURNS | 55 | A13230Z32 | POT.CERMET,4TURN,+-10% | 1.98 |
| L03 | 01 | R 45 | | 3339P-1-502 | BOURNS | 55 | A13230Z32 | POT.CERMET,4TURN,+-10% | 1.98 |

*** TOTAL COST= 116.54 ***

TABLE 7.2: BOM: PHASE-LOCK LOOP PC BOARD A13230Z32 (CONT.)