VLA Technical Report #69

Model R8919 & F8919

Waveguide Signal Distributor
Manuals

MODEL R9819 & F9819

WAVEGUIDE SIGNAL DISTRIBUTOR

MANUALS

DWN		Jan. 16/'76	TITLE	Hitachi, Ltd.	KOGANEI BRANCH DWG. NO.
CHKD	M. Hiratani		- 1 -		68108403
APPD	K. Ohi				

CONTENTS

1. General description

This waveguide signal distributor is designed for use as part of a VLA (Very Large Array) radio telescope system. This is used in conjunction with TE_{01} mode circular waveguide to form a signal transmission system for a radio astronomy receiving array. This is a passive, reciprocal, 12-port millimeter-wave network which functions to frequency multiplex a 26 - 52 GHz input into 11 channels defined in Table 1.

As shown in Fig. 1 and 2, the waveguide signal distributor system is composed of three sets of units, each of the sets being made up of Model R9819, which is a low-range section (1 to 6 ch. for 26 to 40 GHz), and Model F9819, which is a high-range section (7 to 11 ch. for 42 to 52 GHz), shown in Fig. 3 and 4. As shown in Fig. 5, the waveguide signal distributor is formed of one semicircular band diplexer, nine rectangular band diplexers, one circular to semicircular mode transition and two semicircular to rectangular mode transitions.

The wveguide signal distributor has the following features.

(1) Interior surfaces of the waveguide system is silver plated to reduce loss and resist corrosion.

(2) The waveguide signal distributor is airtight so that it may be pressurized with dry nitrogen at an internal pressure of 0.4 kg/cm^2.

Windows are provided at the output end of each channel of the rectangular waveguide.

(3) Signal distribution is effected with band diplexers using a cut-off filter to attain flat frequency characteristic in the band.

Note: The Nippon Telegraph and Telephone Public Corporation has the following patents related to the above semi-circular band diplexer and rectangular band diplexers, and Hitachi Electronics is under a licensing agreement covering these patents with the Nippon Telegraph and Telephone Public Corporation.

Japanese Patent No. 549322

" No. 610889

" No. 653964

" No. 696073

DWN		Jan. 16/'76	TITLE	- 4 -	Hitachi, Ltd. Tokyo Japan	KOGANEI BRANCH DWG. NO. 68108406
CHKD	Y. Hirotani					
APPD	K. Ohi					

68108406

Table 1. Channel frequencies.

Channel	Frequency band (GHz)	Center frequency (GHz)
1	27.412 to 28.412	27.912
2	29.788 to 30.788	30.288
3	32.212 to 33.212	32.712
4	34.588 to 35.588	35.088
5	37.012 to 38.012	37.512
6	39.388 to 40.388	39.888
7	41.812 to 42.812	42.312
8	44.188 to 45.188	44.688
9	46.612 to 47.612	47.112
10	48.988 to 49.988	49.488
11	51.412 to 52.412	51.912

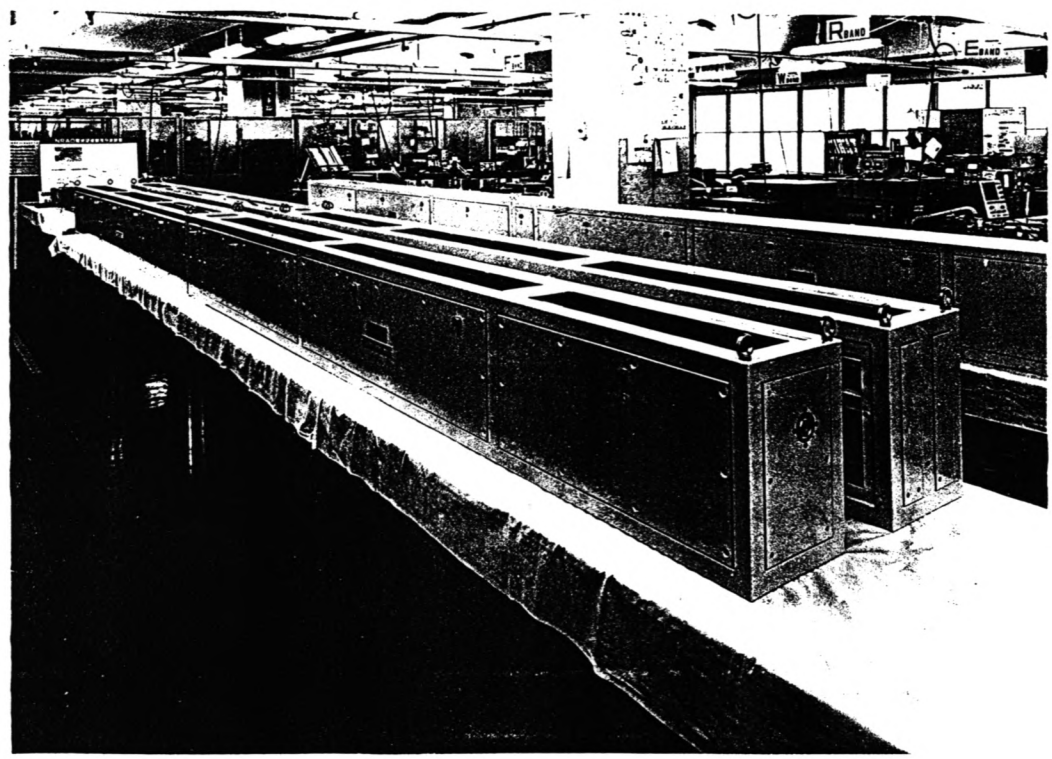

Fig. 1. Outview of the waveguide signal distributors.

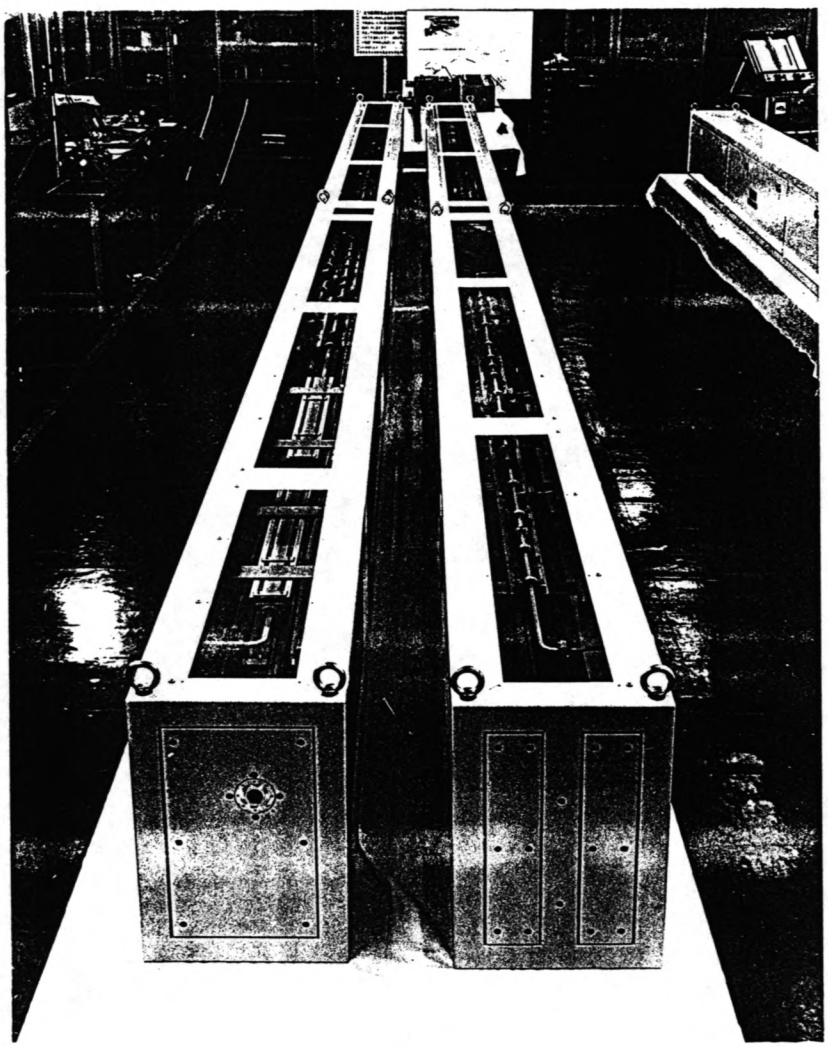

Fig.2. Outview of the waveguide signal distributor.

DWN		Jan. 16/'76	TITLE	Hitachi, Ltd.	KOGANEI BRANCH DWG. NO.
CHKD	H. Hirotani		- 6 -		68108408
APPD	K. Ohi				

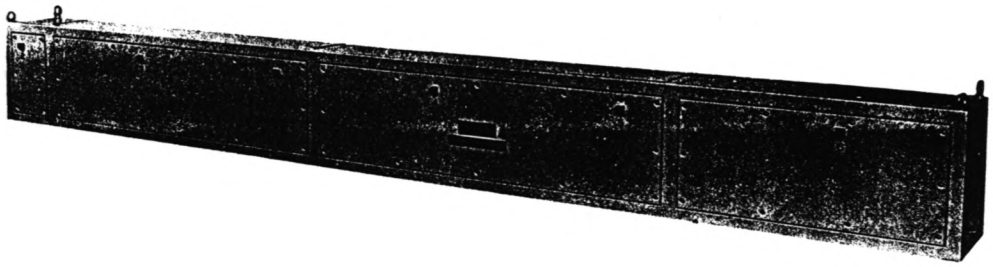

62577

Fig. 3. Outview of the Model R9819.

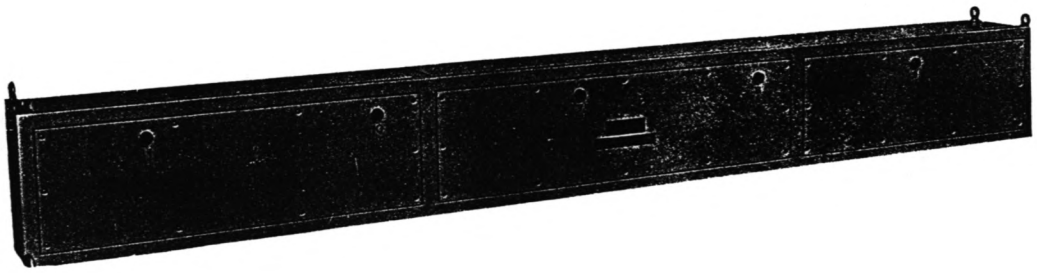

62569

Fig. 4. Outview of the Model F9819.

DWN		Jan. 16/'76	TITLE	Hitachi, Ltd.	KOGANEI BRANCH DWG. NO.
CHKD	H. Hirotani		- 7 -		68108409
APPD	K. Ohi				

68108409

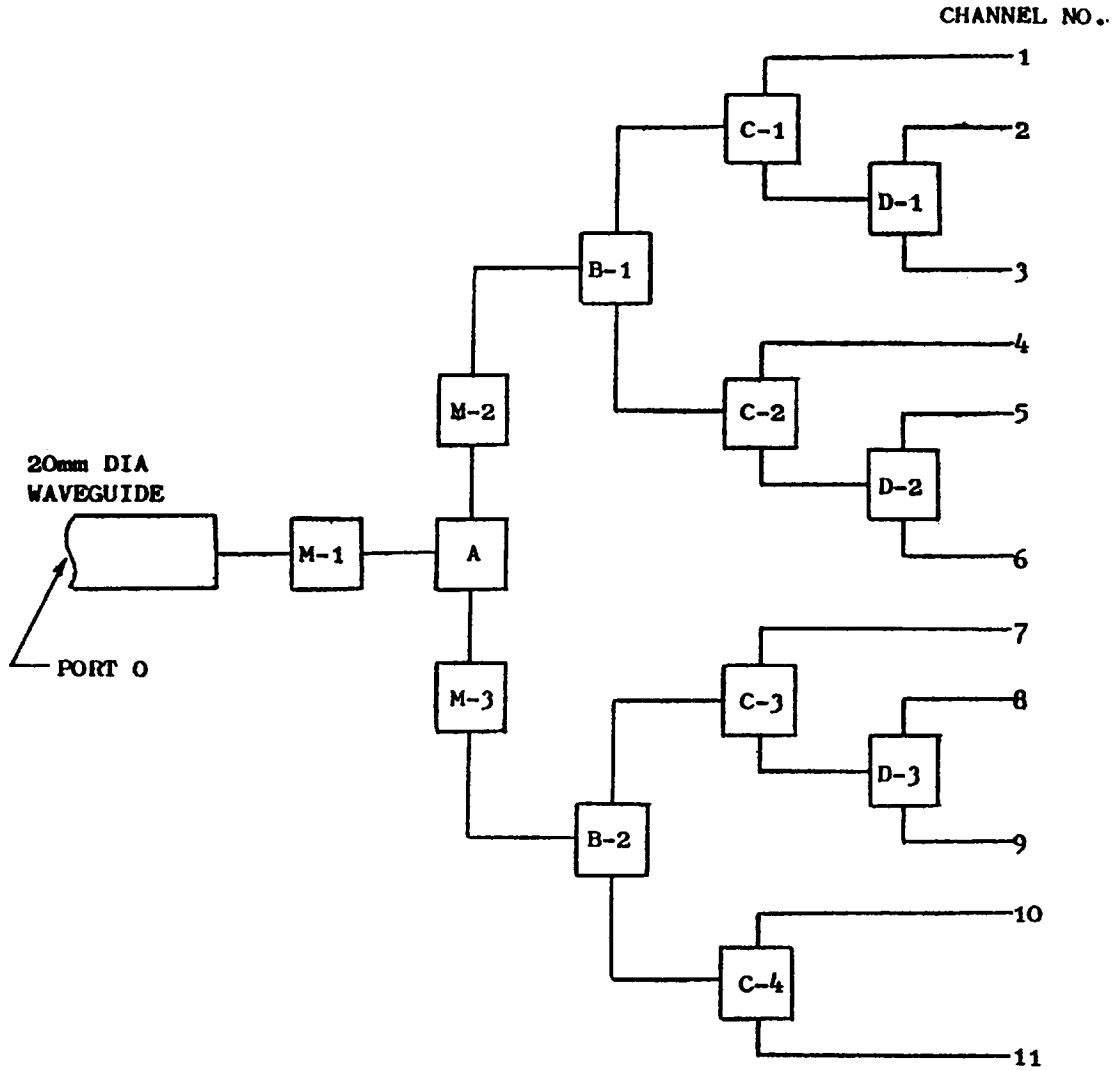

M-1 CIRCULAR TO SEMICIRCULAR MODE TRANSITION

M-2,3 SEMICIRCULAR TO RECTANGULAR MODE TRANSITIONS

A SEMICIRCULAR BAND DIPLEXER

B-1,2

C-1,2,3,4 RECTANGULAR BAND DIPLEXERS

D-1,2,3

Fig. 5. Block diagram of the signal distributor.

DWN		Jan. 16/'76	TITLE	Hitachi, Ltd. Tokyo Japan	KOGANEI BRANCH DWG. NO.
CHKD	S. Hirotani		- 8 -		68108410
APPD	K. Ohi				

2. Construction

2.1 Major component parts

This waveguide signal distributor uses a combination of Model R9819 and F9819 because of transportation and packing restrictions. The components of the waveguide signal distributor are band diplexers, mode transitions and connection waveguides which are formed of the major parts shown in Table 2.

2.2 Construction table

Details of the waveguide signal distributor are shown in Table 3.

2.3 List of accessories

A list of accessories used for the assembling and maintenance of the waveguide signal distributor are provided in Table 4.

Table 2. Major component parts.

Item	Major parts	Reference designation	Drawing No.
Band diplexer	Semicircular band diplexer	A	6323918
	Rectangular band diplexer	B-1	6323919
	"	B-2	6323920
	"	C-1	6323921
	"	C-2	6323922
	"	C-3	6323923
	"	C-4	6323924
	"	D-1	6323925
	"	D-2	6323926
	"	D-3	6323927
Mode transition	Circular to semicircular mode transition	M-1	
	Semicircular to rectangular mode transition	M-2	
	"	M-3	
Connection waveguide	Port O waveguide	-	6323916
	Flexible waveguide	-	
	Window	-	
	Rectangular port flange	-	

Table 3. Construction table.

No.	Description	Quantity	Reference designation	Remarks
1	Semicircular band diplexer	3	A	
2	Circular to semicircular mode transition		M-1	
3	Semicircular to rectangular mode transition	3	M-2	
4	"	3	M-3	
5	Rctangular band diplexer	3	B-1	
	"	3	B-2	
7	"	3	C-1	
8	"	3	C-2	
9	"	3	C-3	
10	"	3	C-4	
11	"	3	D-1	
12	"	3	D-2	
13	"	3	D-3	
14	Port O waveguide	3		20mmdia.
15	Flexible waveguide	3		20mmdia.
16	Tapered transition	3		20mm -18mmdia.
17	Port flange	18		UG-599/U
18	"	15		UG-383/U
19	Window	18		WR-28
20	"	15		WR-19
21	Straight rectangular waveguide	3	D2-5	l=70mm
22	"	3	C2-D2	l=69.6mm
23	"	3	C2-4	l=70mm
24	"	3	B1-C2	l=329mm

DWN		Jan. 16/76	TITLE	Hitachi, Ltd.	KOGANEI BRANCH DWG. NO.
CHKD	H. Hirotani		- 11 -		681084 3
APPD	K. Oki				

681084 3

No.	Description	Quantity	Reference designation	Remarks
25	Straight rectangular waveguide	3	B1-C2	l=100mm
26	"	3	B1-C1	l=100.6mm
27	"	3	C1-1	l=340.8mm
28	"	3	D3-8	l=70mm
29	"	3	C3-D3	l=189.6mm
30	"	3	C3-7	l=70mm
31	"	3	B2-C3	l=139.6mm
32	"	3	C4-10	l=70mm
33	"	3	C4-11	l=70mm
34	Bended rectangular waveguide	3	D2-6	94.6×100mm
35	"	3	C1-1	30×134.4mm
36	"	3	C1-1	34.8×40mm
37	"	3	C1-D1	30×134.4mm
38	"	3	D1-3	34.8×40mm
39	"	3	D1-2	34.8×40mm
40	"	3	M2-B1	26×30mm
41	"	3	M2-B1	32.6×100mm
42	"	3	M2-B1	40.6×200mm
43	"	3	M3-B2	40.6×60mm.
44	"	3	M3-B2	30×45.1mm
45	"	3	M3-B2	30×30mm
46	"	3	D3-9	100×214.6mm
47	"	3	C4-11	30×214.6mm
48	Model R9819 rack	3		
49	Model F9819 rack	3		

DWN		Jan. 16/'76	TITLE	KOGANEI BRANCH DWG. NO.
CHKD	H. Hirotani		- 12 -	
APPD	K. Ohi		Hitachi, Ltd. Tokyo, Japan	68108414

68108414

Table 4. List of accessories.

No.	Description	Quantity	Remarks
1	Tools		
1-1	Deep socket (M8)	2	use to join racks together
1-2	Box driver (M8)	2	"
1-3	Open ended spanner (M3,M4)	6	use to fix or remove the bolts
1-4	Screw driver (M3)	3	"
1-5	" (M4)	3	"
2	O-ring (P-29)	20	fix to the flanges of racks junctions and port 0 waveguides
3	Guide pin (2.6 dia. x 20mm)	8	use to fix port 0 waveguides
4	Bolts		
4-1	" (M8×20mm)	30	for racks
4-2	" (M4×10mm)	100	for covers
4-3	" (M3×20mm)	60	for waveguide flanges
4-4	" (M3×16mm)	50	"
4-5	" (M3×10mm)	50	"
5	Washers		
5-1	" (M8)	60	
5-2	" (M3)	160	
	Spring washers		
6-1	" (M8)	30	
6-2	" (M3)	210	
7	Nuts (M8)	30	
8	Port flange, UG-599/U	3	for maintenance
9	" , UG-383/U	3	"
10	Window, WR-28	6	"
11	" , WR-19	5	"

3. Specifications

3.1 Transmission and return loss specification

The 12-port reciprocal network is specified by the 78 scattering matrix coefficients given in Table 5.

3.2 Port flanges and modes

The port flanges and modes are shown in Table 6.

3.3 Mechanical configuration

The mechanical configuration and the locations of all ports in the signal distributor are shown in Drawing No. 6323965.

The waveguide signal distributor is divided into two parts in separate casings.

3.4 Pressurization

The unit can be pressurized with dry nitrogen at a pressure of 0.4 kg/cm^2 and has a leak rate of less than $10^{-2} cm^3/min$.. The unit includes windows at the rectangular waveguide ports, but no window is provided at the circular input port.

3.5 Environment

Temperature of laboratory environment: 19 to 25 °C
(67 to 77 °F)

3.6 Surface finish

The inner surface of the waveguide signal distributor is plated with silver to resist corrosion. Its outer surface is painted "neutral gray" (Mansel Synbol 4.5Y 6.3/0.9). The casings are painted "silk white" (Mansel Synbol 6Y 8.0/0.9).

Table 5. Transmission and return loss specification.

Scattering coefficient*	Name	Specified loss (dB)	Applicable frequency band
Soo	Input return loss	Min. 18	All channels
Sio	Channel i loss	Max. 5**	Channel i
i=1 thru 11	Wrong channel loss	Min. 18	All channels except i.
Sii i=1 thru 11	Channel i return loss	Min. 18	Channel i
Sij i,j=1 thru 11	Channel isolation	Min. 18	All channels

* Note: Sij=Sji, Port 0 is input port.

** Note: The variation in insertion loss must be less than ±1dB over the channel frequency range, ±0.25dB over any 50MHz band, and ±0.10dB over any 10MHz band.

Table 6. Port flanges and modes.

Port (channel) number	Waveguide mode	Waveguide	Flange
0	Circular TEo1	Diameter 20mmΦ	Drawing No. 6323916
1 to 6	Rectangular TE1o	WR-28	UG-599/U
7 to 11	Rectangular TE1o	WR-19	UG-383/U modified

3.7 Weight

A weight of the waveguide signal distributor is about 250 kg.

4. Description

The waveguide signal distributor is designed to distribute signals with frequencies of 26 to 52 GHz to the 11 channels shown in Table 1.

It is composed of a semicircular band diplexer, rectangular band diplexers, a circular to semicircular mode transition and semicircular to rectangular mode transitions.

The parts of these sections will be described below.

4.1 Semicircular band diplexer

The semicircular band diplexer is composed of two hybrid elements and a cut-off filter. Its construction is shown in Fig. 6, and its outview is shown in Fig. 7. Each hybrid element is formed of two semicircular waveguides with coupling holes in the common wall.

The cut-off filter is made up of semicircular waveguides with a smaller diameter.

Among the signals coming in through Port 1, those with a frequency (f_L) lower than the cut-off frequency determined by the diameter of the cut-off filter are led to Port 2, and those with a frequency (f_H) higher than the cut-off frequency are led to Port 4.

The semicircular band diplexer covers a uniquely wide band as a diplexer of this type. It divides signals with frequencies of 26 to 52 GHz into two groups for

the waveguide signal distributor.

Drawing No. 6323918 provides an outline drawing of the semicircular diplexer.

4.2 Rectangular band diplexer

The rectangular band diplexer is composed of two hybrid elements and a cut-off filter. The construction of this diplexer is shown in Fig. 8, and its apperance is shown in Fig. 9.

These hybrid elements are rectangular waveguides with coupling holes in the common wall.
The cut-off waveguide is a reduced width rectangular waveguide.

Among the signals coming in through Port 1, those with a frequency (f_L) lower than the cut-off frequency determined by the dimensions of the cut-off filter are led to Port 2, and those with a frequency (f_H) higher than the cut-off frequency are led to Port 4.

The rectangular band diplexer, which uses a rectangular waveguide, is of very small size and can reduce loss.

Five different rectangular band diplexers (B-1, C-1, C-2, D-1 and D-2) using WR-28, and four different rectangular band diplexers (B-2, C-3, C-4 and D-3) using the WR-19 are used in the waveguide signal distributor.

Outline drawings of the rectangular band diplexers are provided in Drawing Nos. 6323919 to 6323927.

4.3 Circular to semicircular mode transition

This unit effects "smooth" transition from circular TE_{01} mode to semicircular TE_{01} mode. The construction of this unit is shown in Fig. 10, and its appearance is shown in Fig. 11. The mode transition, which effects transition from 18mm$^{dia.}$ to 9mm^{R}, is provided at the input point of the semicircular band diplexer and combined with the semicircular to rectangular mode transition.

Drawing No. 6323918 provides an outline drawing of the circular to semicircular mode transition.

4.4 Semicircular to rectangular mode transition

This unit effects "smooth" transition from semicircular TE_{01} mode to rectangular dominant mode via a sectorial part. The construction of the semicircular to rectangular mode transition is shown in Fig. 12, and its appearance is shown in Fig. 13.

The waveguide signal distributor uses a mode transition from 9 mm R to WR - 28 and one from 9 mm R to WR - 19. The mode transition from 9 mm^{R} to WR - 28 is provided at the lower band output port of the semicircular band diplexer and combined with the circular to semicircular mode transition. The mode transition from 9 mmR to WR-19 is provided at the higher band output port of the semicircular band diplexer.

An outline drawing of the semicircular to rectangular mode transition is provided in Drawing No. 6323918.

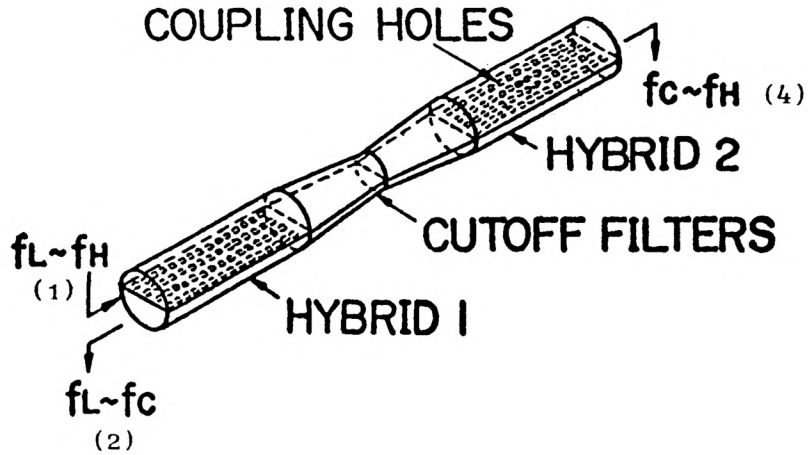

Fig. 6. Construction of the semicircular band diplexer.

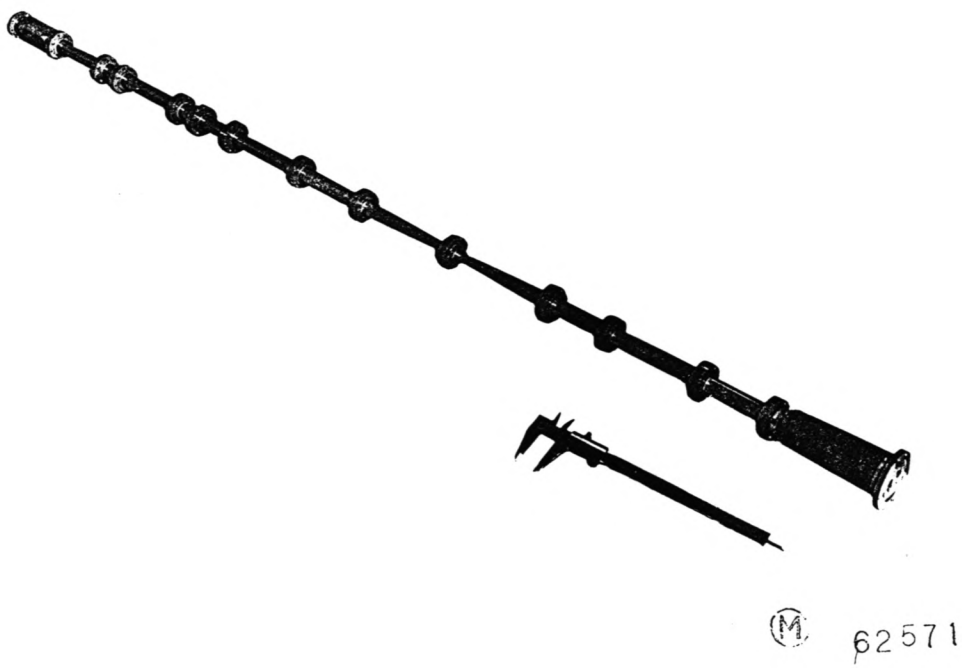

Fig. 7. Outview of the semicircular band diplexer.

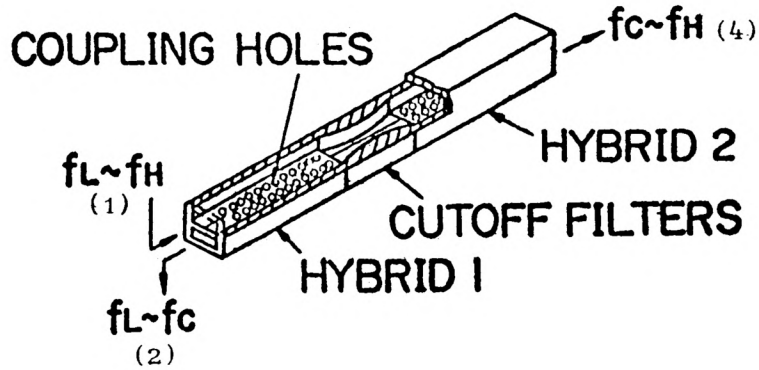

Fig. 8. Construction of the rectangular band diplexer.

Ⓜ 62581

(A) WR-28 Series

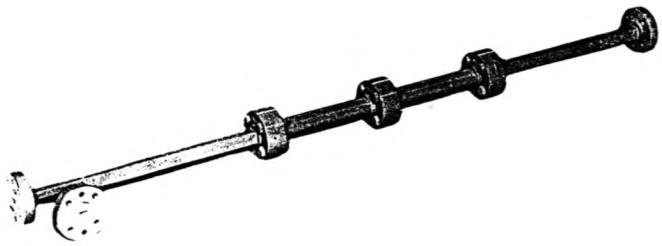

① 62519

(B) WR-19 Series

Fig. 9. Outview of the rectangular band diplexers.

DWN		Jan.16/'76	TITLE - 20 -	Hitachi,Ltd.	KOGANEI BRANCH DWG NO 68108422
CHKD	H. Hirotani				
APPD	K. Ohi				

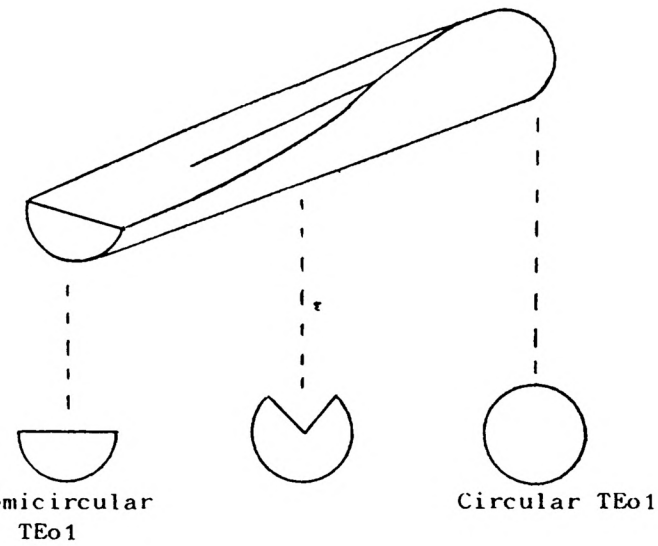

Fig. 10. Construction of the circular to semicicular mode transition.

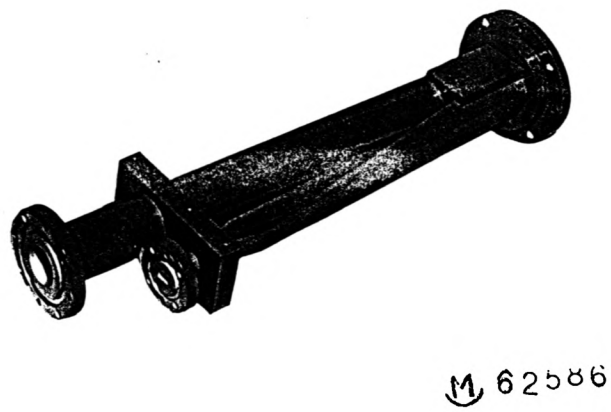

Fig. 11. Outview of the circular to semicircular mode transition.

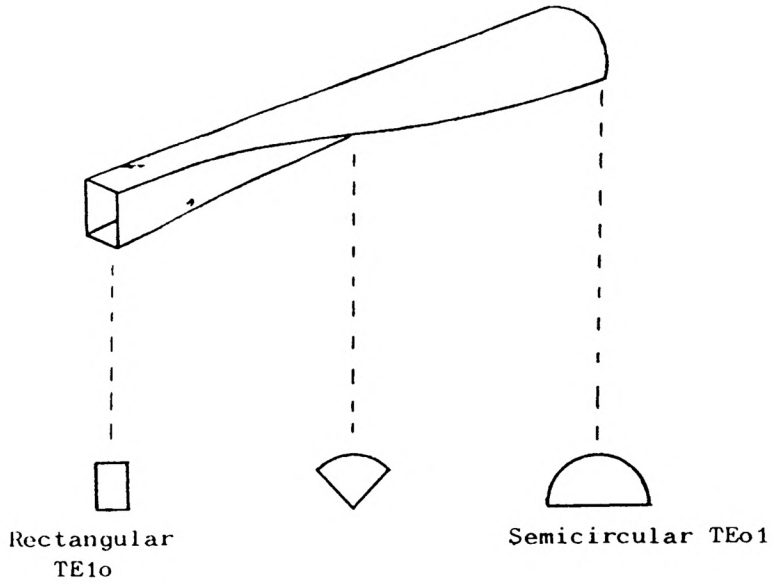

Fig. 12. Construction of the semicircular to rectangular mode transition.

Fig. 13. Outview of the semicircular to rectangular mode transition.

DWN		Jan 16/76	TITLE	Hitachi, Ltd.	KOGANEI BRANCH DWG. NO.
CHKD	H. Hiratani		- 22 -		68108424
APPD	K. Ohi				

68108424

5. Assembling procedure

This waveguide signal distributor is separated into two racks (Model R9819 and Model F9819) to facilitate transportation. Combine the R9819 and F9819 racks into a single assemmly at a specified installation site and then fix the device in position.

The assembling procedure will be described later in this section.

5.1 Drawings

Drawings and photographs related to the assembling are shown below.

Outline drawing of signal distributor - - - D# 6323965

Layout of signal distributor - - - - - - - - - D# 6323966

Section of rack - - - - - - - - - - - - - - - - D# 6323967

Port 0 20mm waveguide - - - - - - - - - - - - D# 6323916

Rack assembly drawing - - - - - - - - - - - - D# 6323968

Assembly drawing of port 0 waveguide - - - - D# 6323969

Junction for waveguide (R9819) - - - - - - - - Fig. 14

" (F9819) - - - - - - - - Fig. 15

Junction for rack (R9819) - - - - - - - - - - Fig. 16

" (F9819) - - - - - - - - - - Fig. 17

Port 0 20mm waveguide - - - - - - - - - - - - Fig. 18

Rectangular port flange - - - - - - - - - - - Fig. 19

Window - Fig. 20

Junction for port 0 20mm waveguide - - - - - Fig. 21

5.2 Junction of racks (Refer to D# 6323968)

Join racks by use of attached accessories by following the procedure described below.

(1) Join the following three sets of racks together.

(The model numbers and serial numbers on the nameplates on the front panels of the mated racks are indicated below.)

A. Model R9819, Ser. No. M9383 Model F9819, Ser. No. M9383

B. " , Ser. No. M9384 " , Ser. No. M9384

C. " , Ser. No. M9385 " , Ser. No. M9385

(2) Arrange the sets of racks in a straight line on the floor. (A room about 7m long is required.)

(3) Remove the flange covers at the junction and remove the right, left and upper covers near the junction.

(4) Fix the O-ring (P-29) to the flange.

(5) Slide the racks and insert the guide pins for the racks and waveguides in position.

(6) Insert the bolts (M8 x 20, spring washers, washers and nuts) in position and fix the racks together.

(7) Insert the bolts (M3 x 20, spring washers, and washers) in the flange of the waveguide and fix the flange in position.

(8) Put the removed cover back in position.

(9) Remove the flange cover from each waveguide port.

(10) Fix the racks in position by suspension by use of the 3/8-16 UNC hole (at 22 spots) shown in D# 6323965.

(11) If the upper hooks interfere with installing action, remove the hooks.

5.3 Fixing of port 0 waveguide in position (Refer to D# 6323969)

(1) Remove the flange covers from port 0.

(2) Fix the O-rings (P-29) to the flange, insert the guide pins (2.6φ x 20) and bolts (M3 x 20, spring washers and washers) from the side where the port 0 waveguide is located and fix the port 0 20mm waveguide in position.

6. Unpacking

Each crate contains two racks.

Take out the racks by following the procedure described below.

(1) Remove the screw marked with a red circle with a spanner and take out the top wooden lid and bars.

(2) Lift the racks out of the box by using the hooks in end positions.

(3) Take out some of the cushioning pieces on the sides of the racks as required.

Note: The accessories are positioned in a corner in the wooden box. Dispose of the box after taking out the accessories.

7. Maintenance (Refer to D# 6323970)

In case windows or rectangular port flanges are damaged when the waveguide signal distributor is fixed in position, replace them by following the procedure described below.

(1) Remove the flange coupling between the rectangular band diplexer and the windows, and remove the flange coupling between rectangular band diplexers.

(2) Remove the front-position fixing screws (at 4 spots) for the rectangular port flange. The windows can be removed together with the rectangular port flange.

(3) Replace the damaged waveguide. fix an O-ring to each junction and fix all the removed sections back in position.

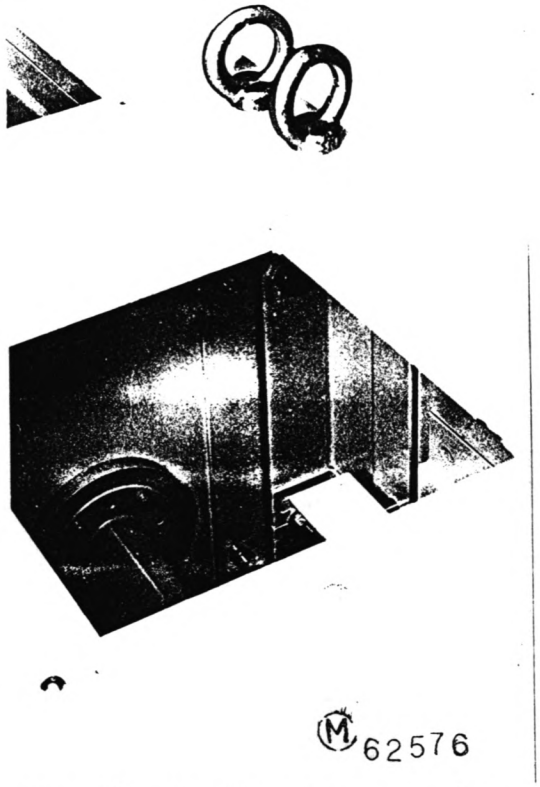

Fig. 14. Junction for waveguide.
(R9819)

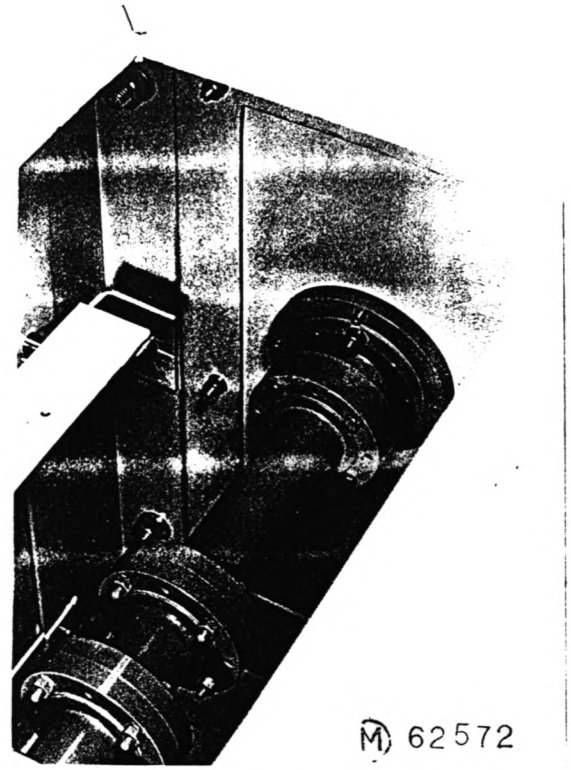

Fig. 15. Junction for waveguide.
(F9819)

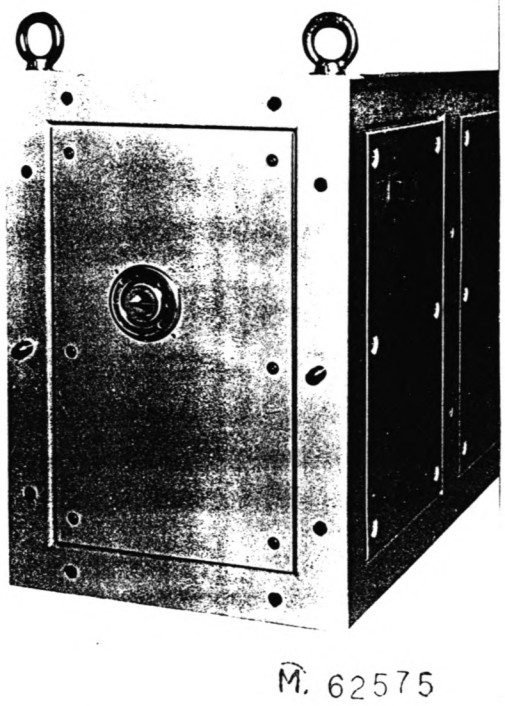

Fig. 16. Junction for rack.
(R9819)

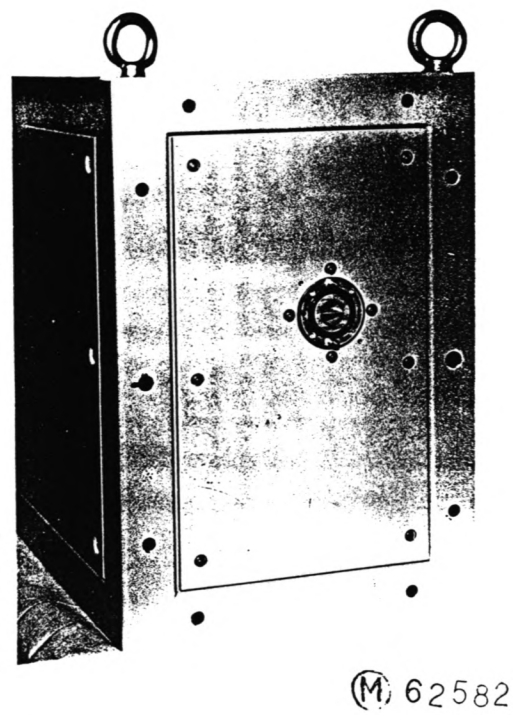

Fig. 17. Junction for rack.
(F9819)

DWN		Jan. 16 '76	TITLE	Hitachi, Ltd. Tokyo Japan	KOGANEI BRANCH DWG. NO
CHKD	S. Hirotani		- 27 -		5510842 9
APPD	K. Ohi				

1811805?

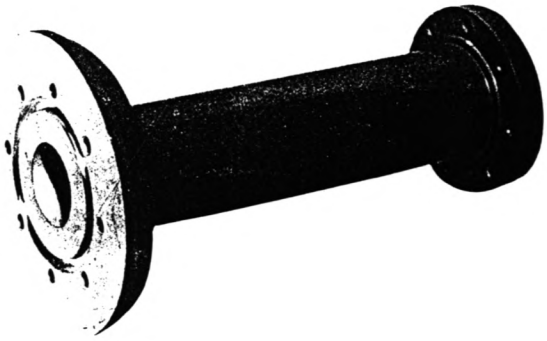

Ⓜ 62580

Fig. 18. Outview of the port O 20mm waveguide.

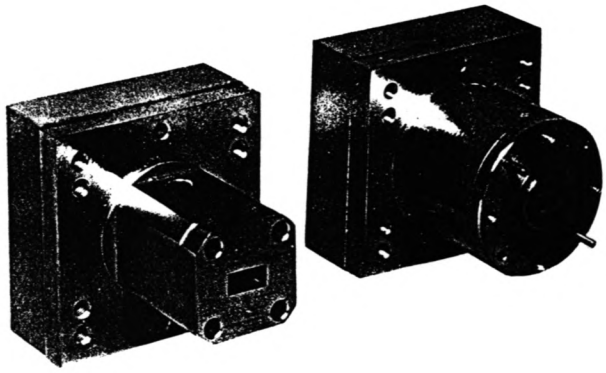

Ⓜ 62573

(UG-599/U) (UG-383/U)

Fig. 19. Out view of the rectangular port flanges.

DWN		Jan. 16/'76	TITLE		KOGANEI BRANCH DWG. NO.
CHKD	H. Hirotani		- 28 -	Hitachi, Ltd. Tokyo Japan	68108430
APPD	K. Ohi				

K8108430

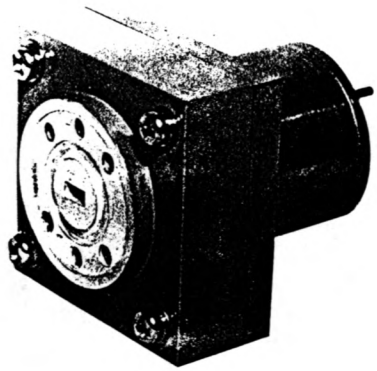

Ⓜ 62578

Fig. 20. Outview of the windows.

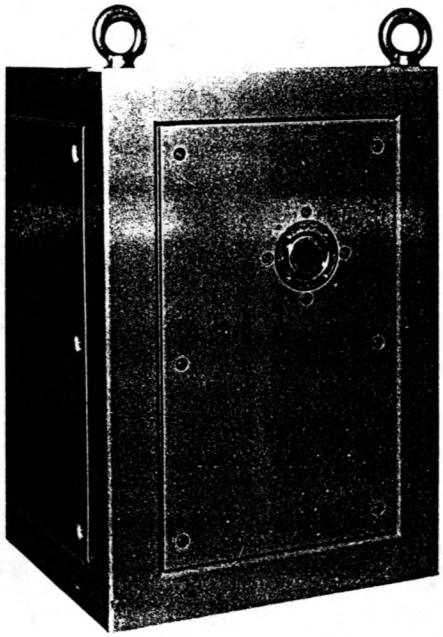

Ⓜ 62583

Fig. 21. Junction for port O 20mm waveguide.

DWN		Jan. 16/'76	TITLE	Hitachi, Ltd.	KOGANEI BRANCH DWG. NO.
CHKD	H. Hirotani		- 29 -		68108431
APPD	K. Ohi				

68108431

8. Appendix

Appendant drawings are shown below.

Port 0 20mm waveguide - - - - - - - - - - - - - D# 6323916

Semicircular band diplexer - - - - - - - - - - D# 6323918

Rectangular band diplexer - - - - - - - - - - - D# 6323919 - 27

Flange (UG-599/U) - - - - - - - - - - - - - - D# 6884211

" (UG-383/U) - - - - - - - - - - - - - - D# 6884212

" (FPBC-50) - - - - - - - - - - - - - - D# 6884213

" (F320A-PG) - - - - - - - - - - - - - - D# 6884214

" (F500A-PG) - - - - - - - - - - - - - - D# 6884215

Outline drawing of signal distributor - - - - D# 6323965

Layout of signal distributor - - - - - - - - - D# 6323966

Section of rack - - - - - - - - - - - - - - - - D# 6323967

Rack assembly drawing - - - - - - - - - - - - D# 6323968

Assembly drawing of port 0 waveguide - - - - D# 6323969

Assembly drawing of port flange and window- - D# 6323970

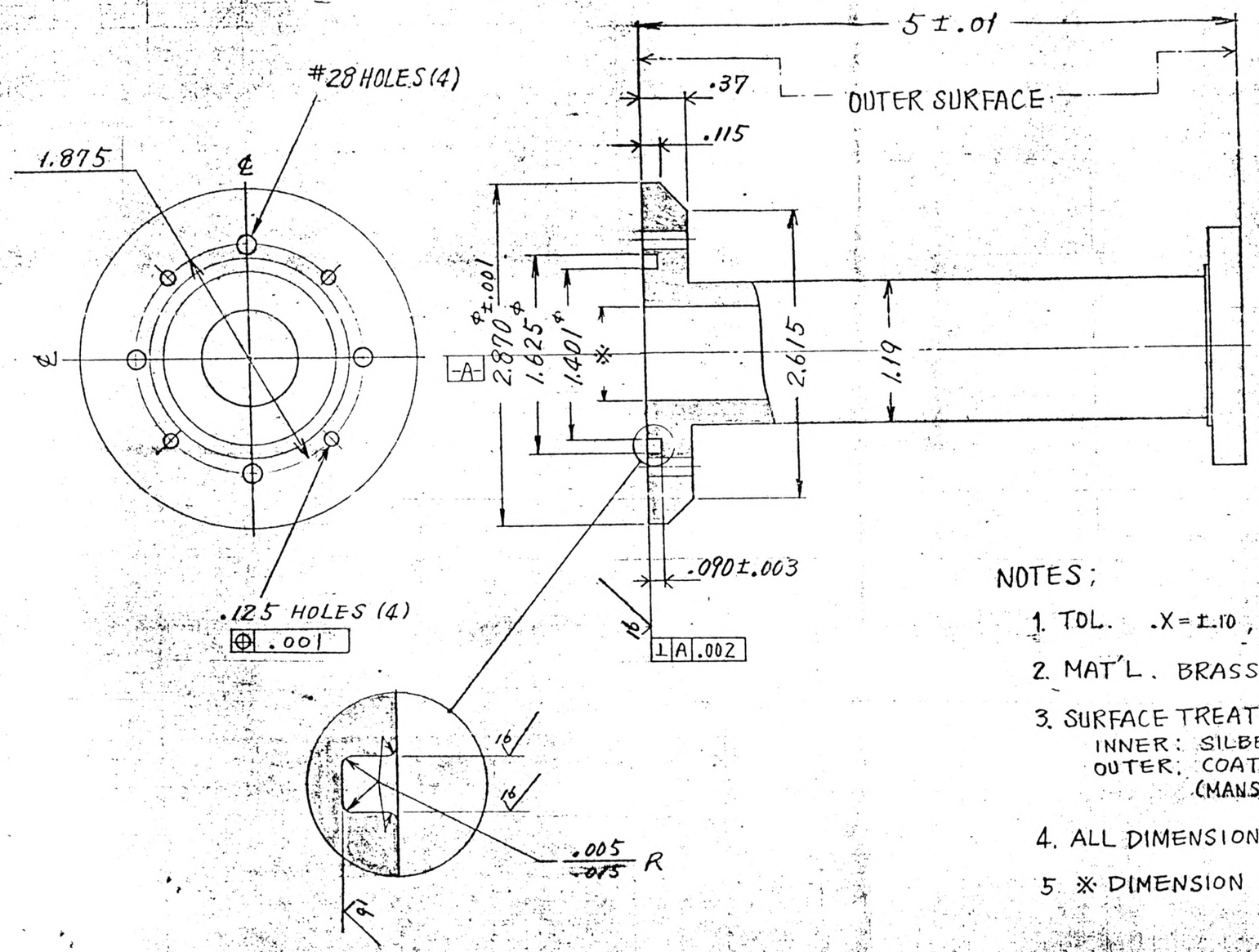

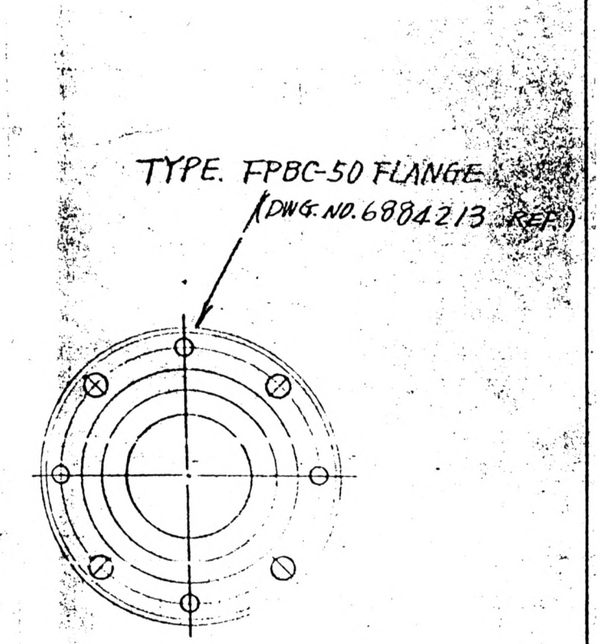

NOTES;

1. TOL. .X = ±.10 , .XX = ±.010 , .XXX = ±.005
2. MAT'L. BRASS
3. SURFACE TREATING
   INNER: SILBER PLATING
   OUTER: COATING PAINTING
   (MANSEL 4.5Y 6.7/0.9, NEUTRAL GRAY)
4. ALL DIMENSIONS IN INCHES.
5. ※ DIMENSION : 20 MM ± 0.02 MM.

PORT 0 20MM WAVEGUIDE

DWN			TITLE	Hitachi Ltd.
CHKD	Y. Kuwaki	6/30/78		KUCHINEI BRANCH DWG. NO. 6823916
APPD	K. Ono			

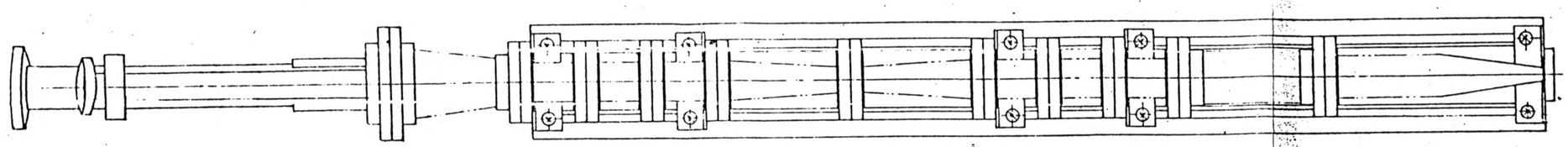

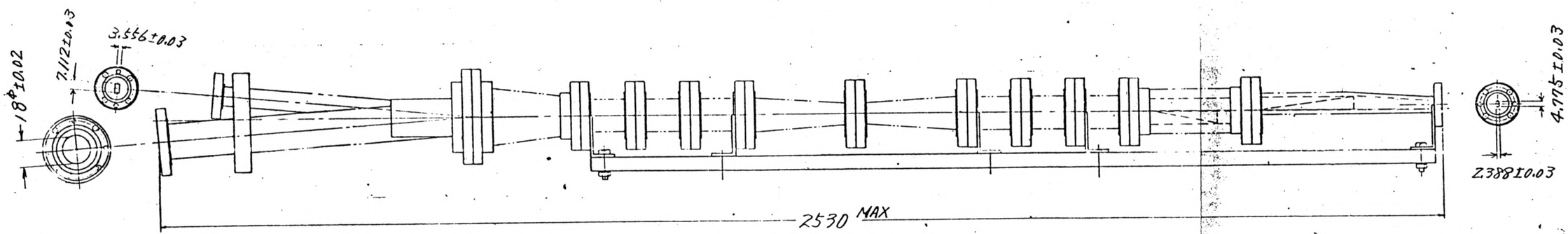

NOTES

1. ALL DIMENSIONS IN MM.
2. FLANGE : DWG. NO. 6884213 REF.
   DWG. NO. 6884214 REF.
   DWG. NO. 6884215 REF.
3. SURFACE TREATING
   INNER : SILVER PLATING
   OUTER : COATING PAINTING
   (MANSEL 4.5Y 6.3/0.9 NEUTRAL GRAY)

SEMI-CIRCULAR BAND DIPLEXER (A)

DWN			TITLE	KOGANEI BRANCH DWG. NO.
CHKD	Y. Kuwaki	4/20/76		
APPD	K. Ohi	"	Hitachi, Ltd. Tokyo Japan	6323918

6323918

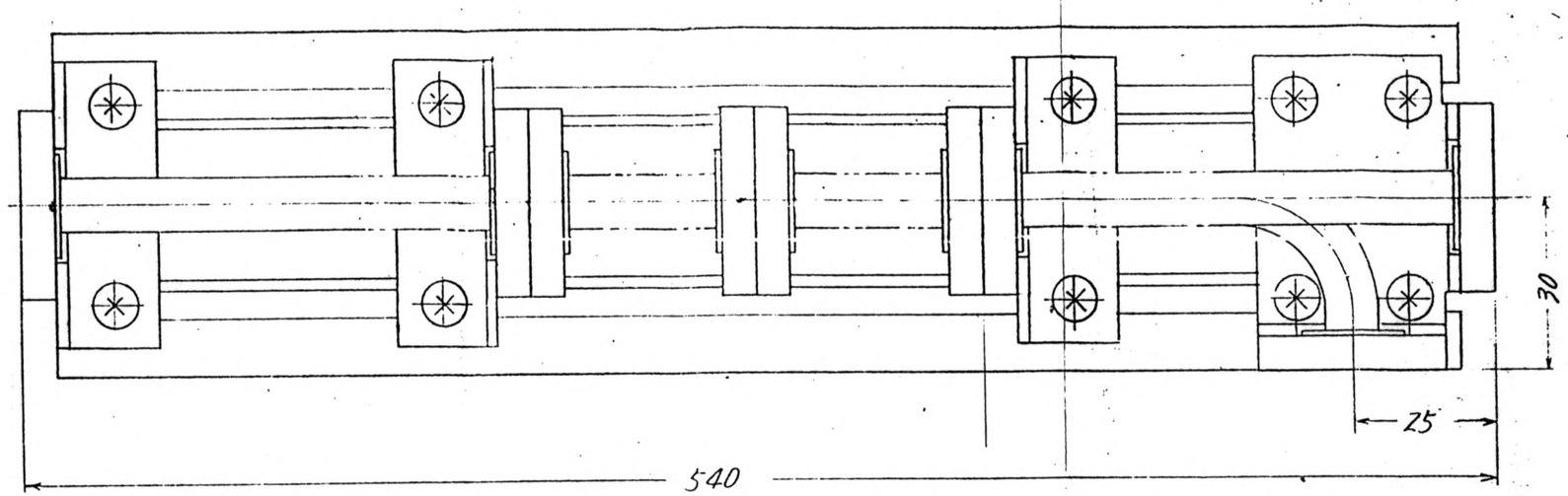

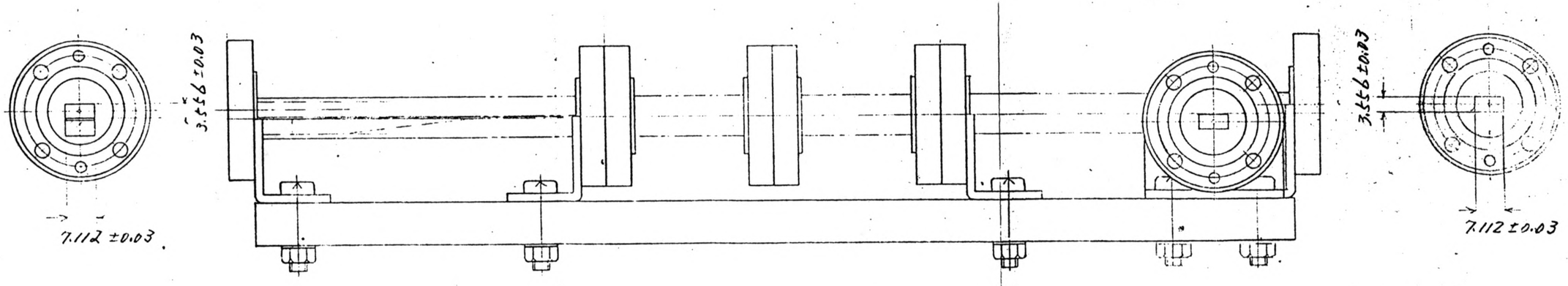

NOTES.

1 ALL DIMENSIONS IN MM.

2. FLANGE: DWG. NO. 6884214 REF.

3. SURFACE TREATING
   INNER : SILVER PLATING
   OUTER : COATING PAINTING
   (MANSEL 4.5Y 6.3/0.9 NEUTRAL GRAY)

RECTANGULAR BAND DIPLEXER (B-1)

DWN			TITLE	Hitachi, Ltd. Tokyo Japan	KOGANEI BRANCH DWG. NO. 6323919
CHKD	Y. Kuwahi	6/30/76			
APPD	K. Ohi	"			

6323919

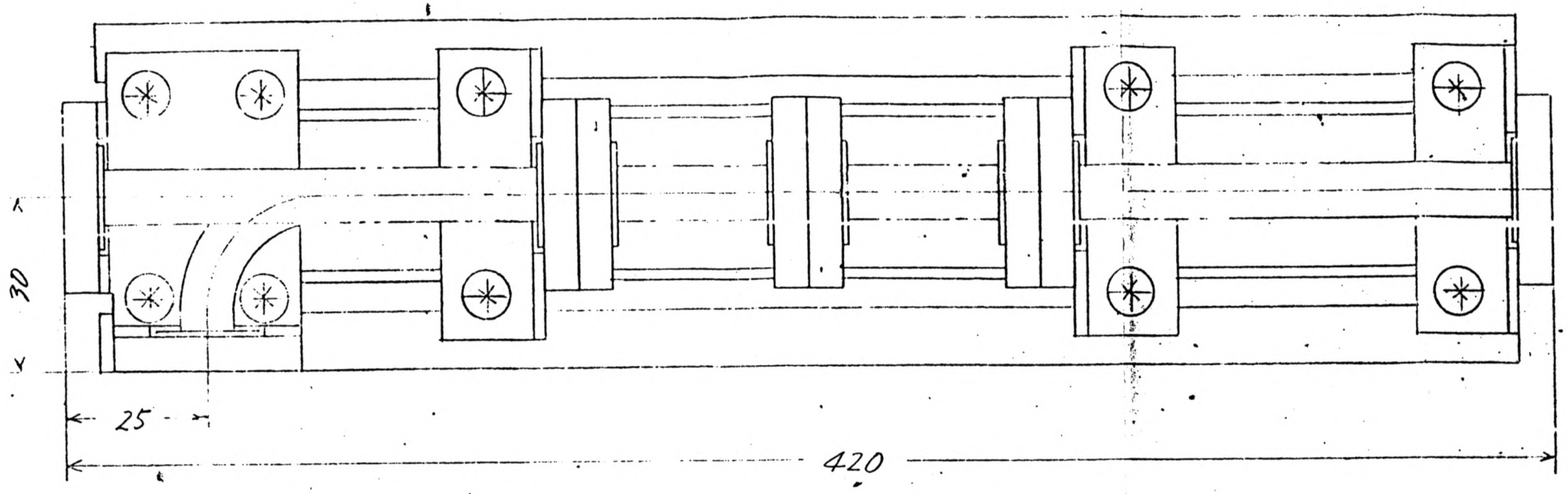

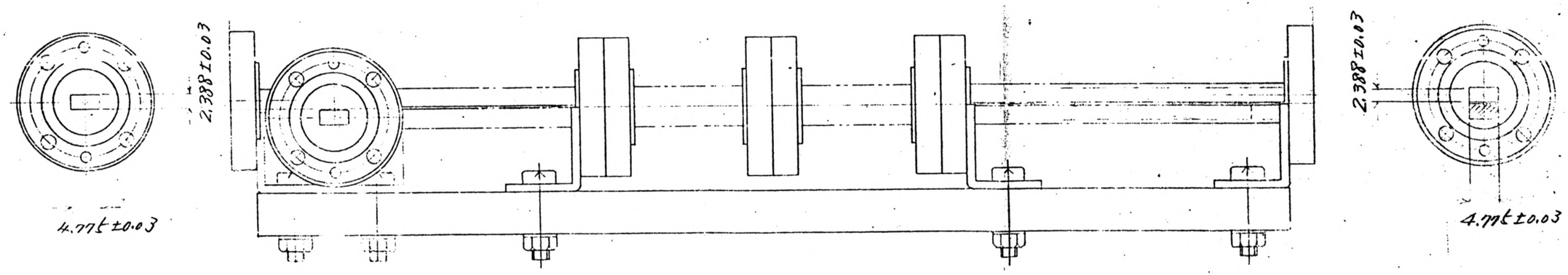

NOTES.

1 ALL DIMENSIONS IN MM

2 FLANGE : DWG. NO. 6884215 REF.

3 SURFACE TREATING
INNER : SILVER PLATING
OUTER : COATING PAINTING
(MANSEL 4.5Y 6.3/0.9 NEUTRAL GRAY)

RECTANGULAR BAND DIPLEXER (B-2)

DWN			TITLE	
CHKD	Y. Kuwahi	4/30/76		
APPD	K. Ohi	"		

Hitachi, Ltd. Tokyo, Japan

KOGANEI BRANCH DWG. NO. 6323920

6323920

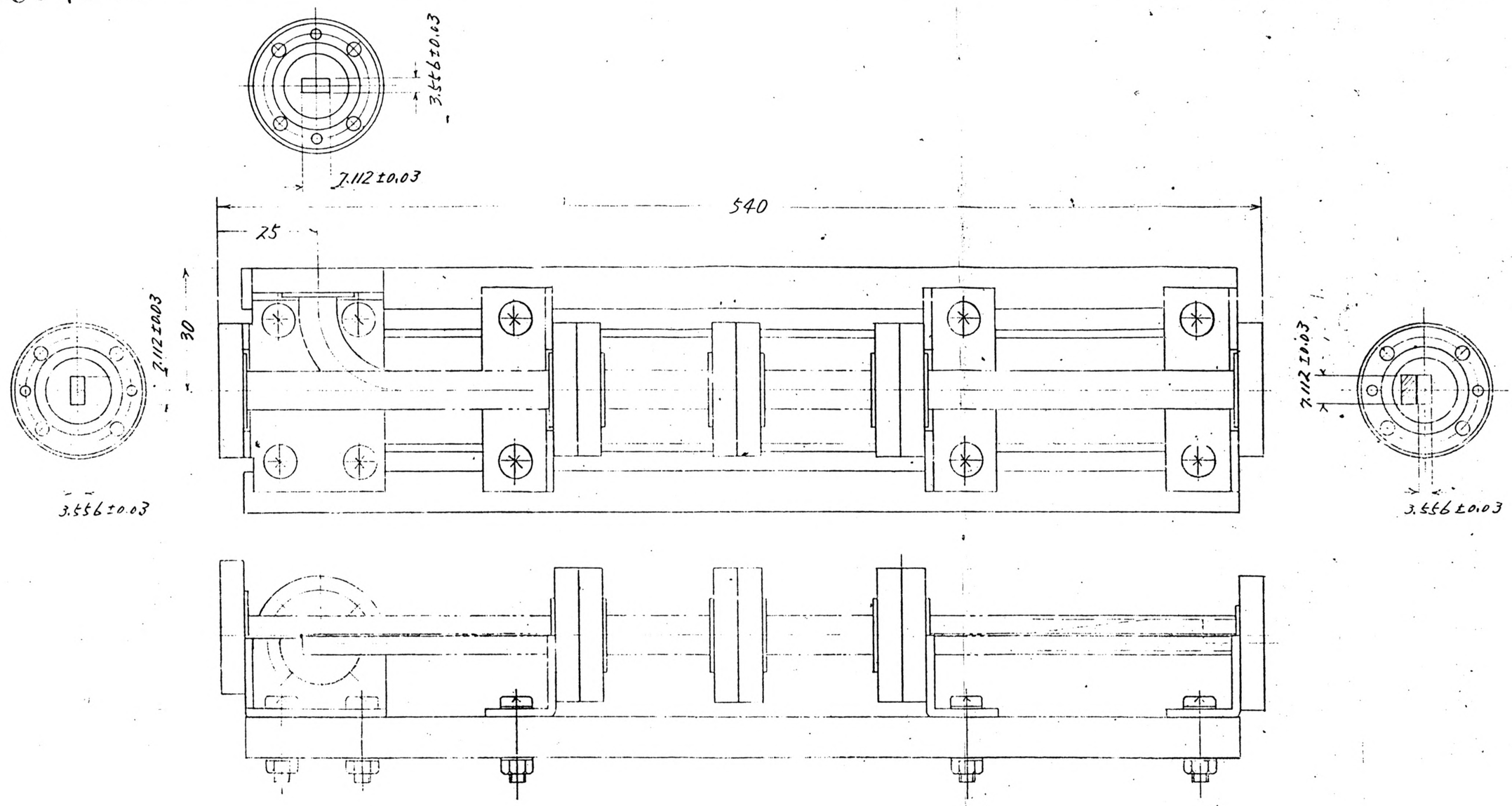

NOTES

1 ALL DIMENSIONS IN MM.

2. FLANGE ; DWG. NO. 6884214 REF.

3. SURFACE TREATING
INNER : SILVER PLATING
OUTER : COATING PAINTING
(MANSEL 4.5Y 6.3/0.9 NEUTRAL GRAY)

RECTANGULAR BAND DIPLEXER (C-1)

DWN			TITLE	KOGANEI BRANCH DWG. NO.
CHKD	Y. Kuwaki	6/30/'75		
APPD	K. Oki	"		

Hitachi, Ltd. Tokyo Japan

6323921

6323921

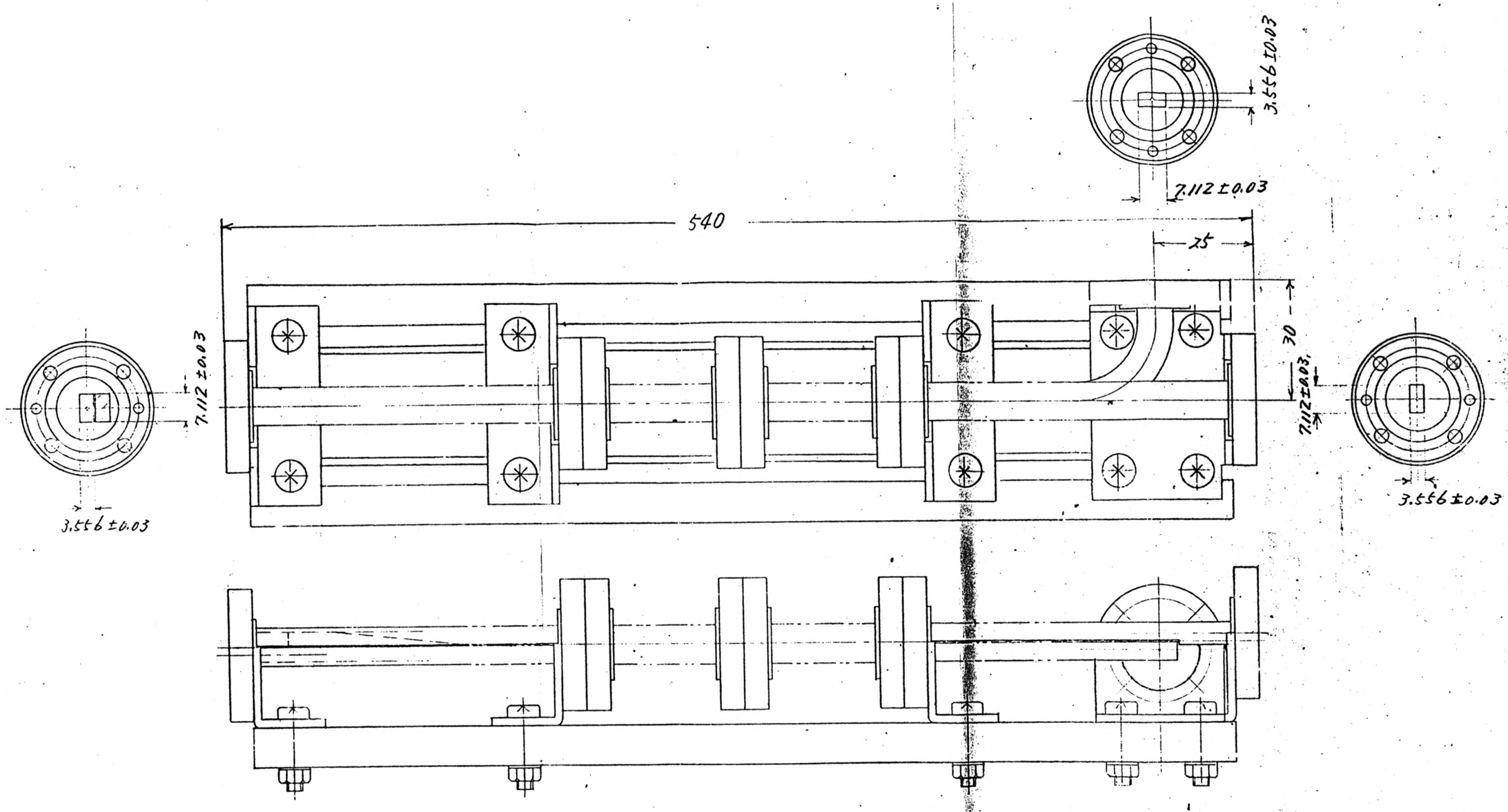

NOTES.

1 ALL DIMENSIONS IN MM.

2. FLANGE ; DWG. NO. 6884214 REF.

3. SURFACE TREATING
INNER: SILVER PLATING
OUTER: COATING PAINTING
(MANSEL 4.5Y 6.3/0.9 NEUTRAL GRAY)

RECTANGULAR BAND DIPLEXER (C-2).

DWN			TITLE
CHKD	Y. Kawachi	6/30/'76	
APPD	K. Ohki	"	

Hitachi, Ltd. Tokyo, Japan

KOGANEI BRANCH DWG. NO. 6323922

6323922

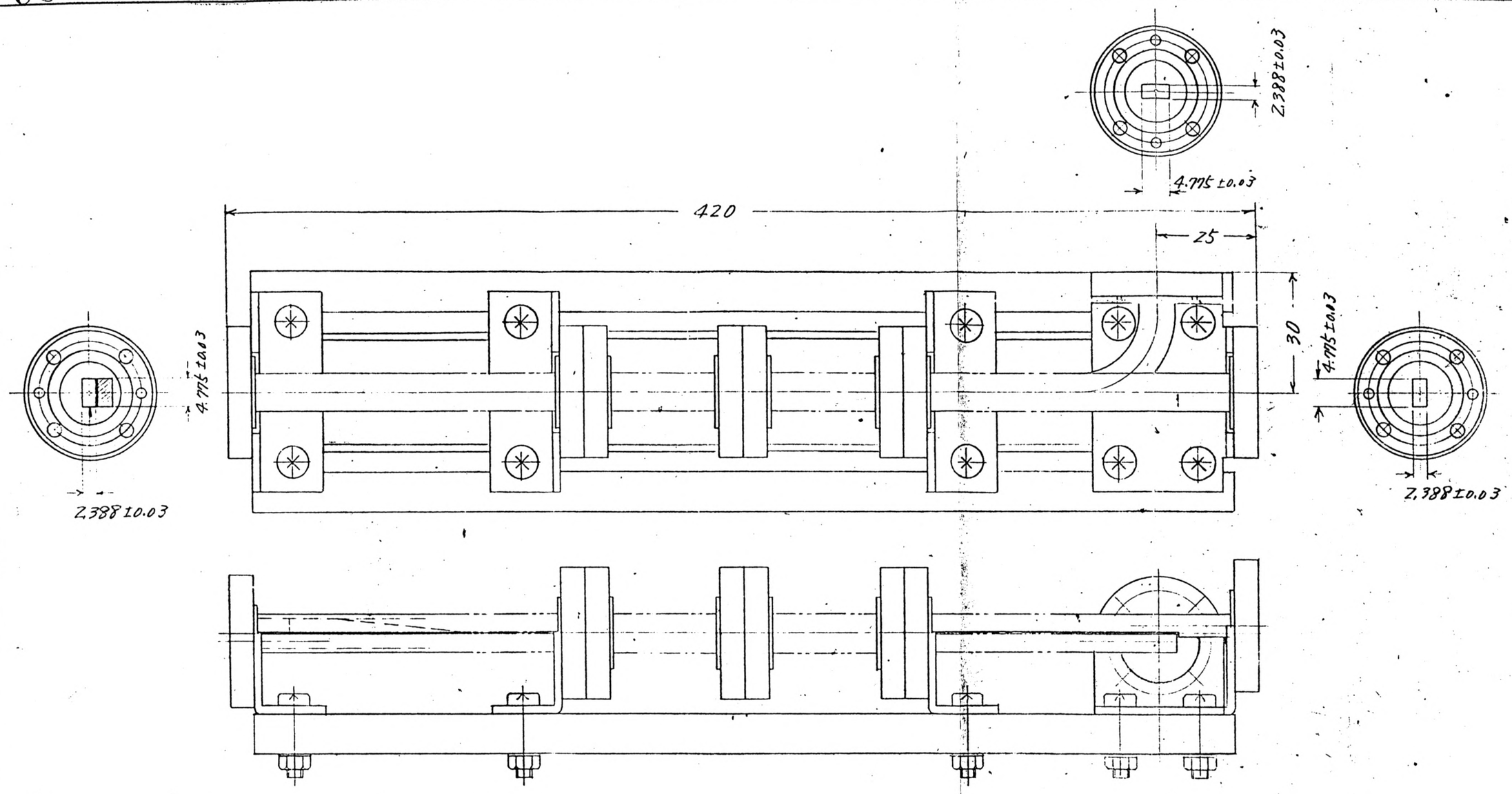

NOTES

1. ALL DIMENSIONS IN MM
2. FLANGE : DWG. NO. 6884215 REF.
3. SURFACE TREATING
   INNER : SILVER PLATING
   OUTER : COATING PAINTING
   (MANSEL 4.5Y 6.3/0.9 NEUTRAL GRAY)

RECTANGULAR BAND DIPLEXER (C-3)

DWN			TITLE	KOGANEI BRANCH DWG. NO.
CHKD	Y. Kuwahara	6/30/76		
APPD	K. Oki	"	Hitachi, Ltd. Tokyo Japan	6323923

6323923

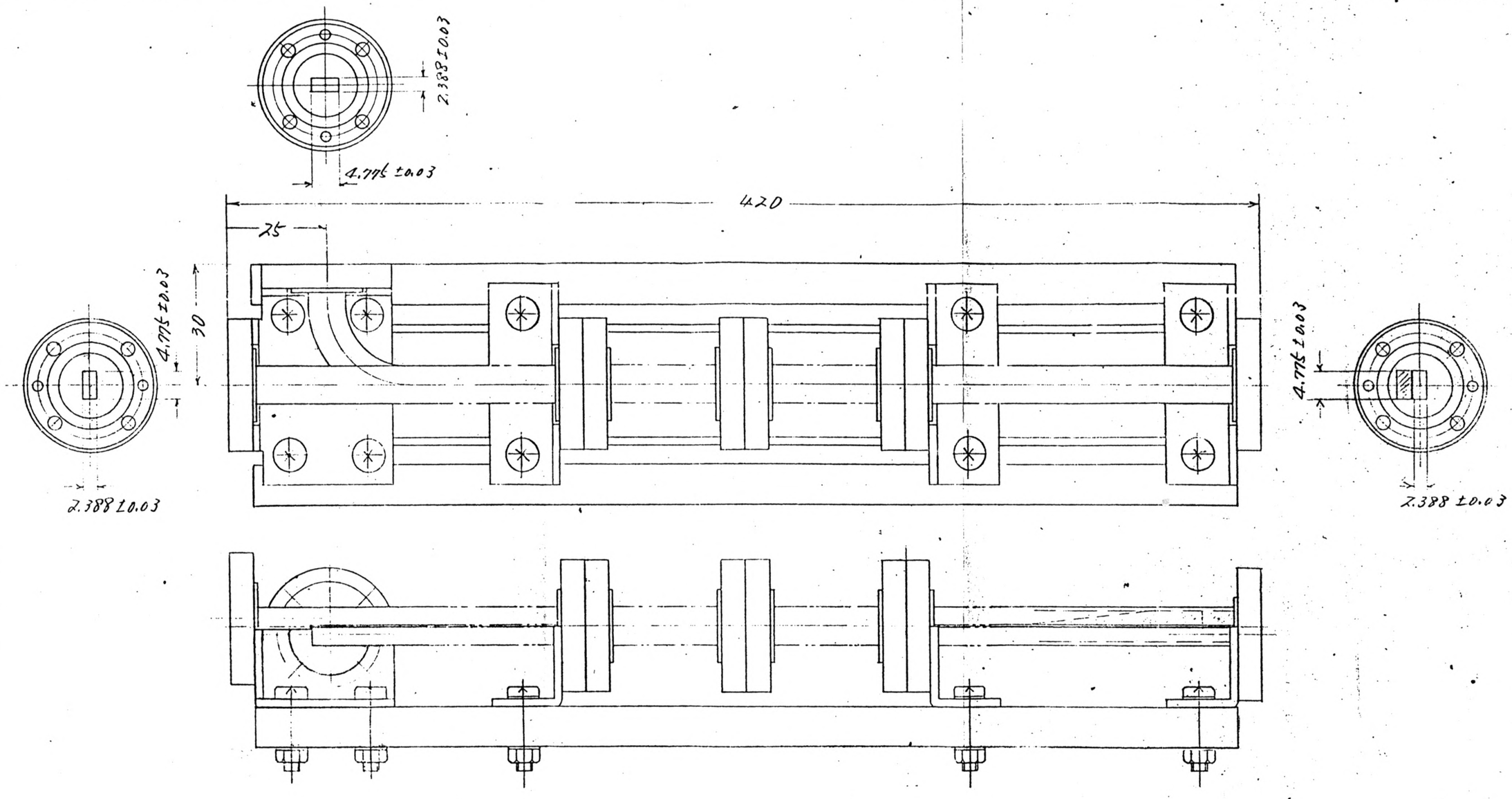

NOTES.

1. ALL DIMENSIONS IN MM.
2. FLANGE : DWG. NO. 6884215 REF.
3. SURFACE TREATING
   INNER: SILVER PLATING
   OUTER: COATING PAINTING
   MANSEL 4.5Y 6.3/0.9 NEUTRAL GRAY)

RECTANGULAR BAND DIPLEXER (C-4)

DWN			TITLE
CHKD	Y. Kuwaki	6/30/74	
APPD	K. Ogi	"	

Hitachi, Ltd. Tokyo Japan

KOGANEI BRANCH DWG. NO. 6323924

6323924

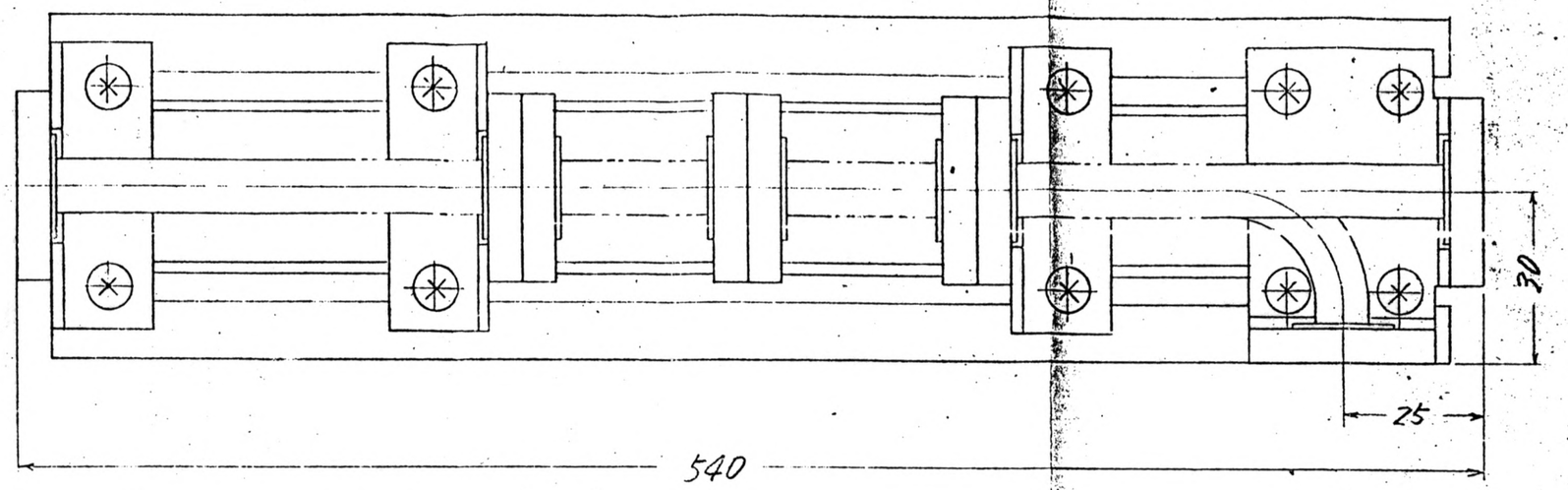

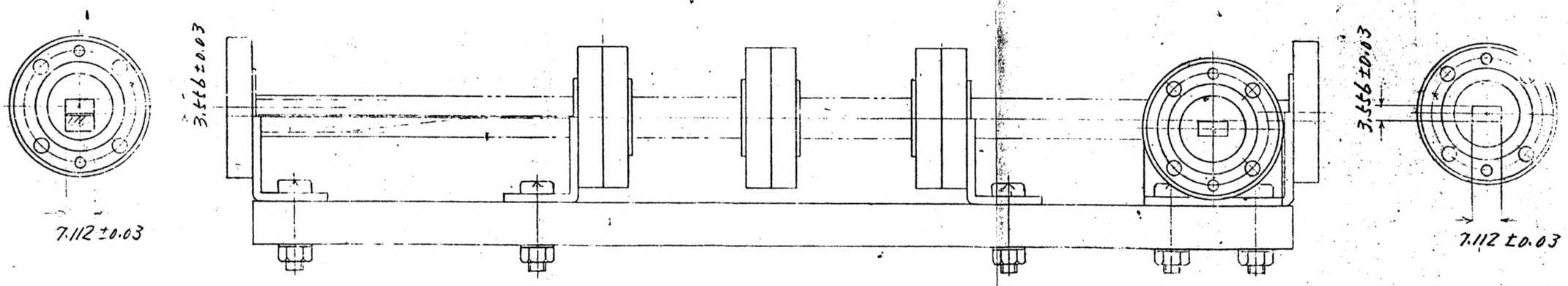

NOTES

1. ALL DIMENSIONS IN MM
2. FLANGE ; DWG. NO. 688421U . REF.
3. SURFACE TREATING
   INNER : SILVER PLATING
   OUTER : COATING PAINTING
   (MANSEL 4.5Y 6.3/0.9 NEUTRAL GRAY)

RECTANGULAR BAND DIPLEXER (D-1)

DWN			TITLE	
CHKD	Y. Kuwaki	6/30/'75		
APPD	K. Ogi	"		

Hitachi, Ltd. Tokyo, Japan

KOGANEI BRANCH DWG. NO. 6323925

6323925

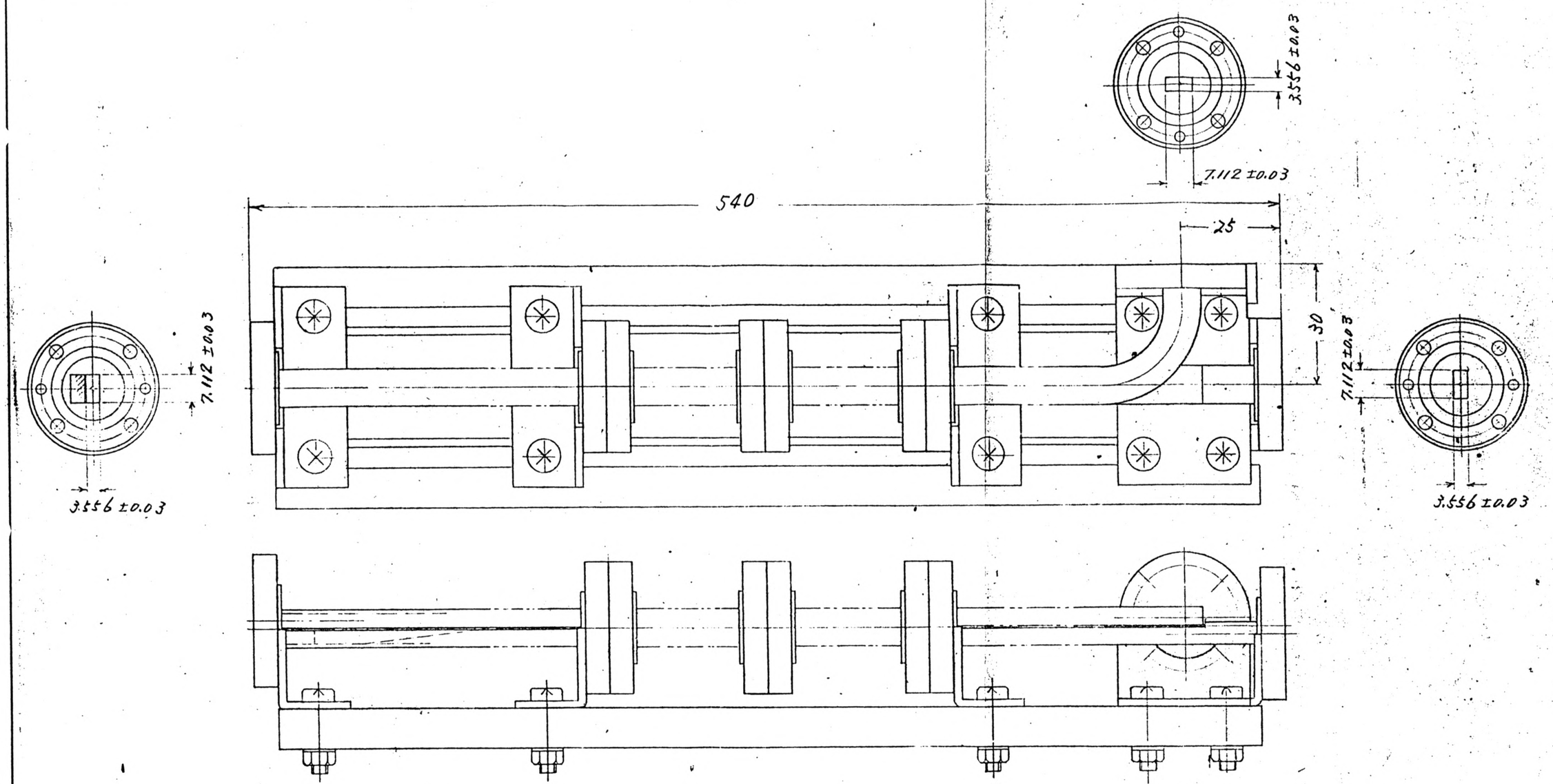

NOTES

1. ALL DIMENSIONS IN MM.
2. FLANGE ; DWG. NO. 6884214 REF.
3. SURFACE TREATING
   INNER : SILVER PLATING
   OUTER : COATING PAINTING
   (MANSEL 4.5Y 6.3/0.9 NEUTRAL GRAY)

RECTANGULAR BAND DIPLEXER (D-2)

DWN			TITLE	Hitachi, Ltd. Tokyo, Japan
CHKD	Y. Kuwaki	6/30/'75		
APPD	K. Ohki	"		

KOGANEI BRANCH DWG. NO. 6323926

6323926

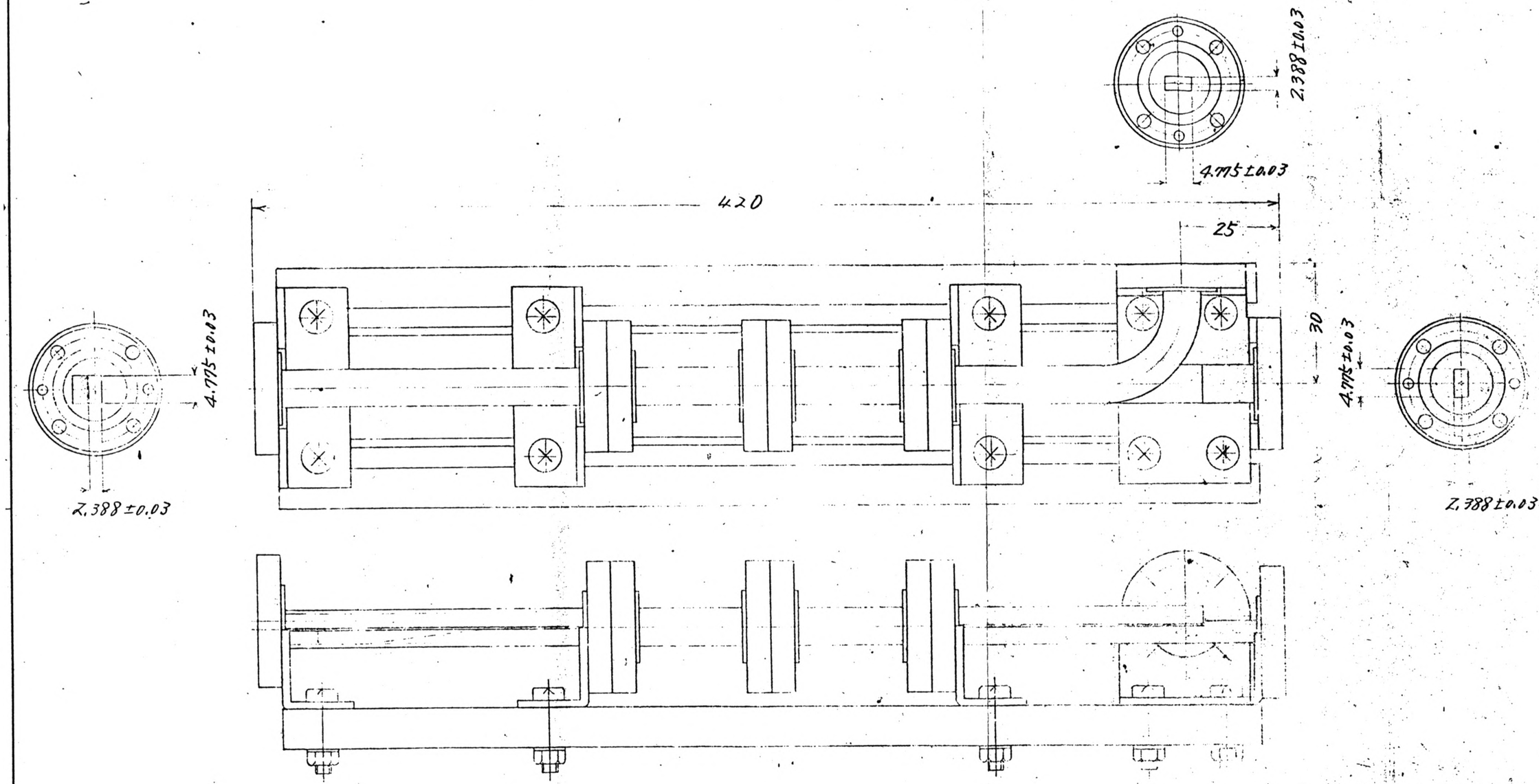

NOTES

1 ALL DIMENSIONS IN MM.

2. FLANGE : DWG. NO. 6884215 REF.

3. SURFACE TREATING
   INNER : SILVER PLATING
   OUTER : COATING PAINTING
   (MANSEL 4.5Y6.3/0.9 NEUTRAL GRAY)

RECTANGULAR BAND DIPLEXER (D-3)

DWN			TITLE	
CHKD	Y. Kawaki	6/30/75		
APPD	K. Oki	"		

Hitachi, Ltd. Tokyo Japan

KOGANEI BRANCH DWG. NO. 6323927

6323927

△ REMOVED OUTER PAINTING
30/9/75

NO.4-40UNC

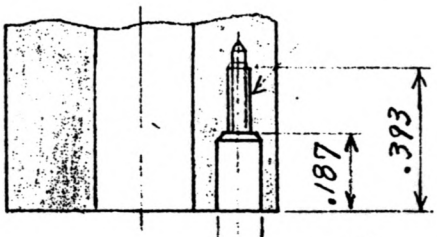

SECTION A-A

.116 / .119 DIA. 4-HOLES

⊕ .002 DIA

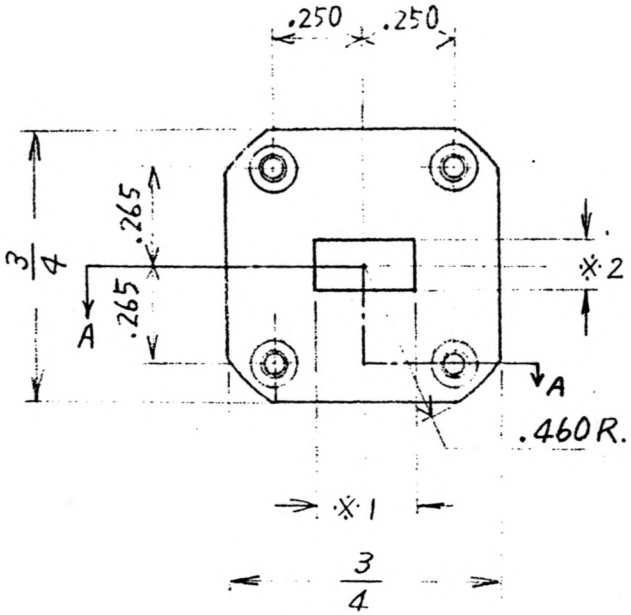

SCALE 2/1

NOTES:

1. TOL. .X = ±.10 .XX ±.010 .XXX ±.005
2. MAT'L BRASS
3. SURFACE TREATING
   INNER: GOLD PLATING
   AND OUTER: ~~COATING PAINTING (MUNSELL 4.5Y 6.3/0.9 NEUTRAL GRAY)~~ △
4. ALL DIMENSIONS IN INCHES
5. ※1, ※2 DIMENSIONS: 7.112 mm ± 0.03 mm, 3.556 mm ± 0.03 mm (TYPE WRI-320)

DWN			TITLE FLANGE (UG-599/U)	Hitachi, Ltd. Tokyo Japan	KOGANEI BRANCH DWG. NO. 6884211
CHKD	Y. Kuwaki	6/30/76			
APPD	K. Ohi	"			

6884211

6884212

△ REMOVED OUTER PAINTING
30/9/'76

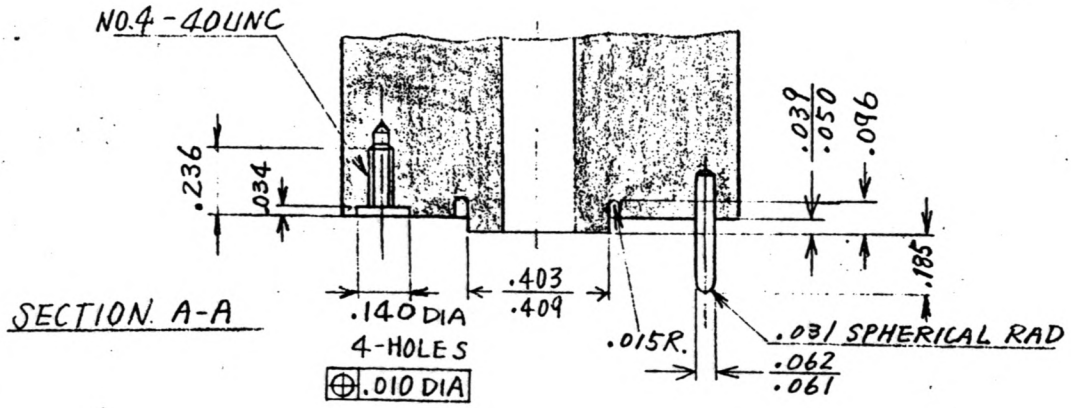

SECTION A-A

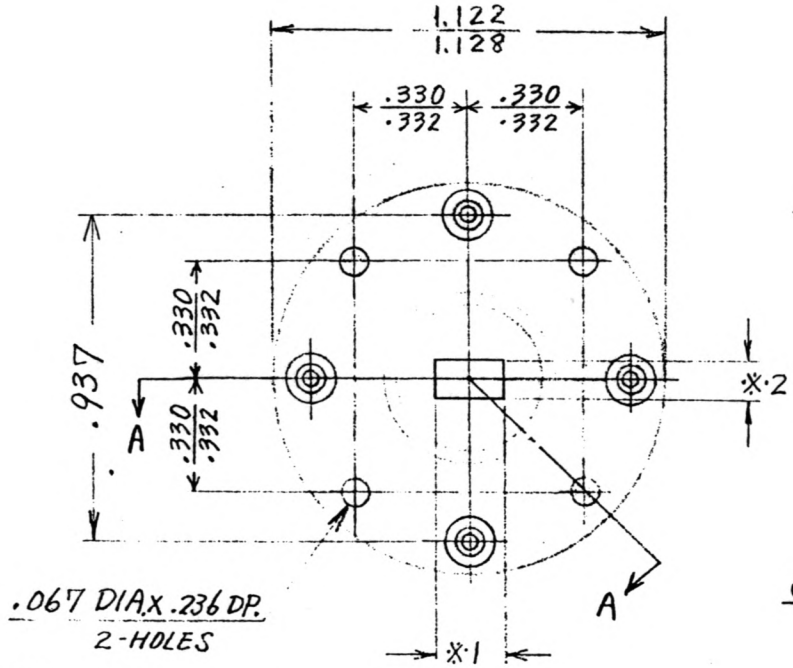

SCALE 2/1

NOTES.

1. TOL. .X = ±.10 .XX = ±0.10 .XXX ± .005
2. MAT'L BRASS
3. SURFACE TREATING
   INNER : GOLD PLATING
   AND OUTER : ~~COATING PAINTING (MANSEL 4.5Y6.3/0.2 NEUTRAL GRAY)~~ △
4. ALL DIMENSIONS IN INCHES
5. ※1, ※2 DIMENSIONS : 4.775 MM ± 0.03 MM. 2.388 MM ± 0.03 MM
   (TYPE. WR1-500)

DWN			TITLE	Hitachi, Ltd. Tokyo Japan	KOGANEI BRANCH DWG. NO.
CHKD	Y. Kuwaki	6/30/'76	FLANGE (UG-383/U)		6884212
APPD	K. Oki	"			

6884212

6884213

△ CHANGED 29.0φ to 27.0φ 30/9/78

SECTION A-A

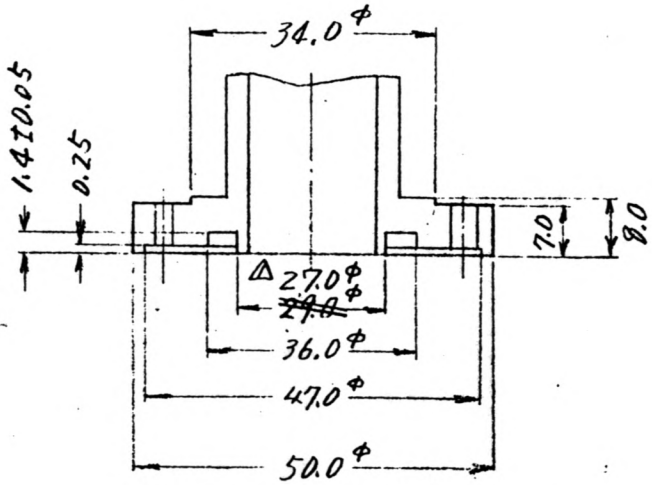

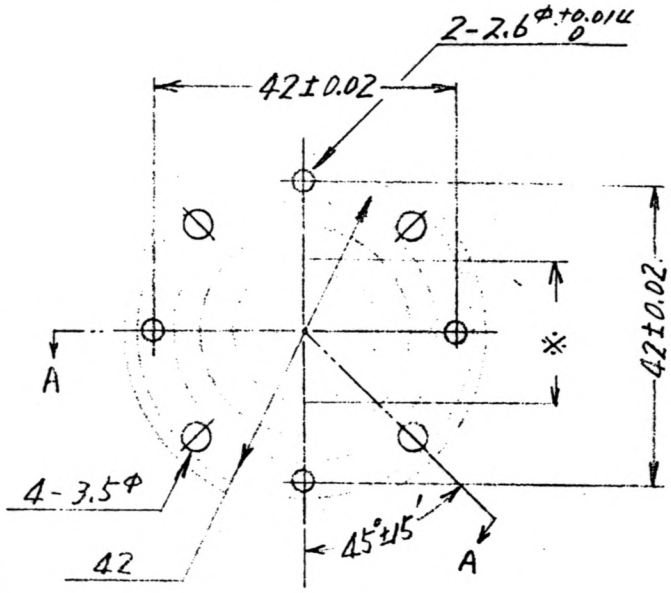

SCALE 1/1

NOTES

1. TOL. .X = ±0.2 .XX = ±0.05
2. MAT'L BRASS
3. SURFACE TREATING
   INNER : SILVER PLATING
   OUTER : COATING PAINTING (MANSEL 4.5Y 6.3/0.9 NEUTRAL GRAY)
4. ALL DIMENSIONS IN MM.
5. ※ DIMENSIONS : 18φ MM ±0.02 MM OR. 20φ MM ±0.02 MM

DWN			TITLE	Hitachi, Ltd. Tokyo, Japan	KOGANEI BRANCH DWG. NO.
CHKD	Y. Kuwaki	6/30/78	FLANGE (FPBC-50)		6884213
APPD	K. Oki	"			

6884213

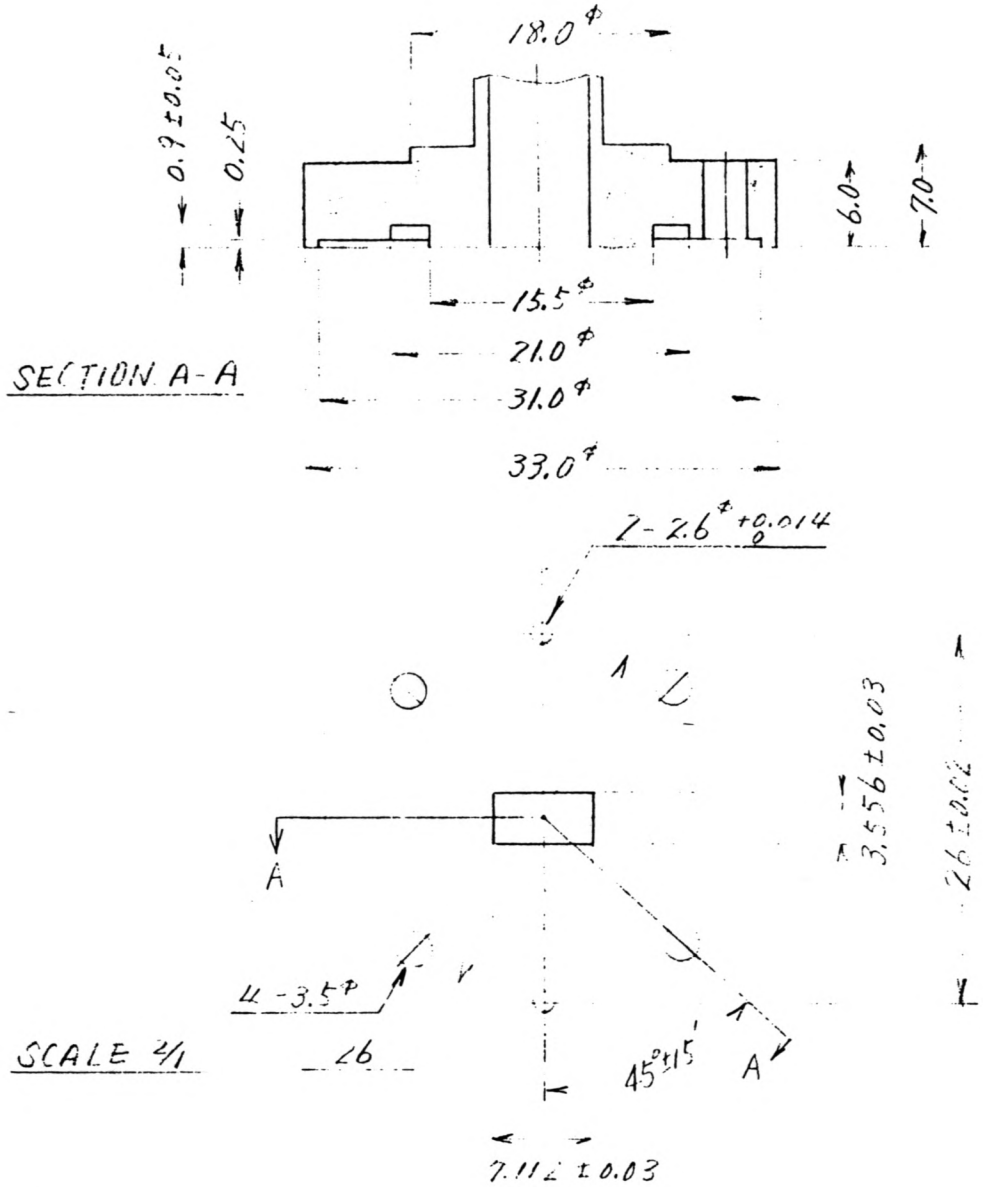

NOTES

1. TOL. .X = ±0.2 , .XX = ±0.05
2. MAT'L BRASS
3. SURFACE TREATMENT
   INNER SILVER PLATING
   OUTER [illegible]
4. ALL DIMENSIONS IN MM.

DWN			TITLE	Hitachi, Ltd. Tokyo Japan	KOGANEI BRANCH DWG NO
CHKD	Y. Kuroki	6/30/74	FLANGE CF320A-F7		
APPD	K. Oki	"			

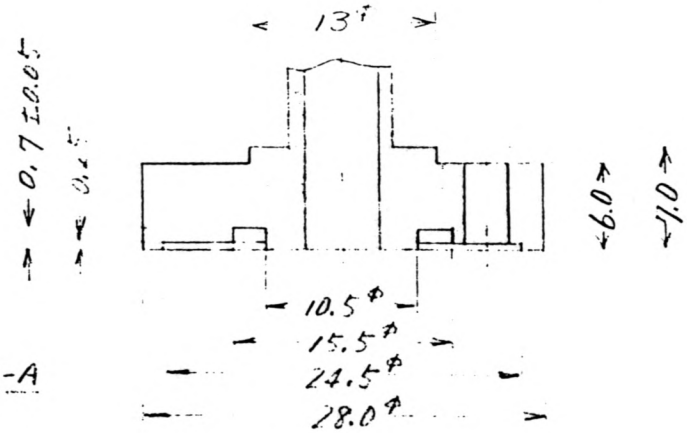

SECTION A-A

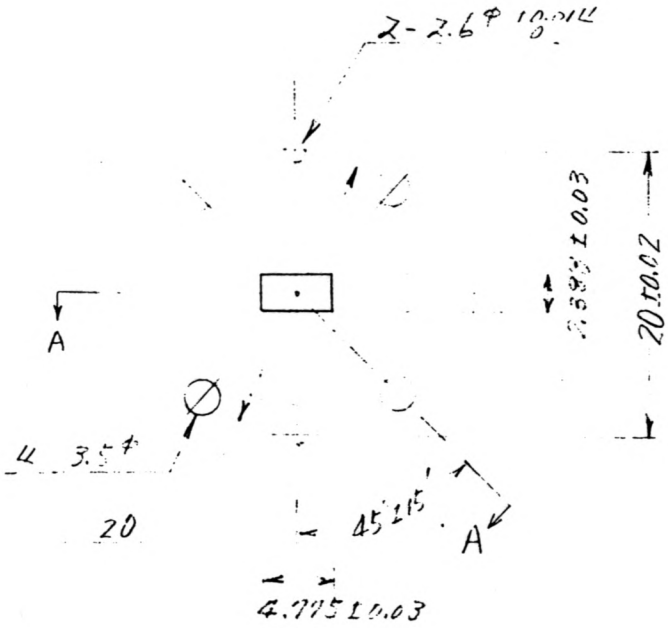

SCALE 2/1

NOTES

1 TOL. .X = ±0.2 .XX = ±0.05

2 MAT'L BRASS

3 SURFACE TREATING
INNER : SILVER PLATING
OUTER : COATING PAINT (MUNSEL 4.5Y6.3/1 NEUTRAL GRAY)

4 ALL DIMENSIONS IN MM.

	DWN			TITLE FLANGE (F500A 17)	Hitachi, Ltd. Tokyo Japan	KOGANEI BRANCH DWG NO
	CHKD	Y. Kuno	[illegible]			
	APPD	K. Oki	"			

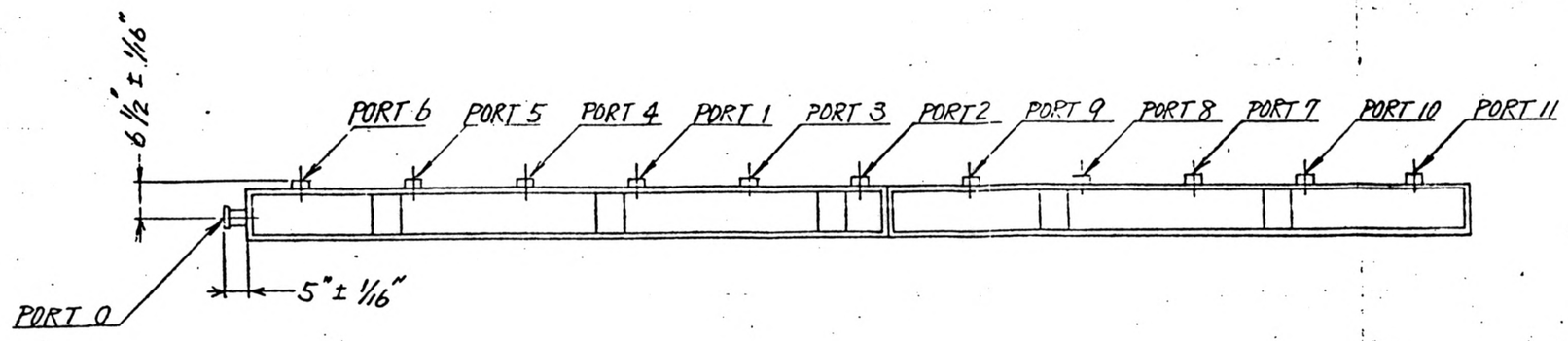

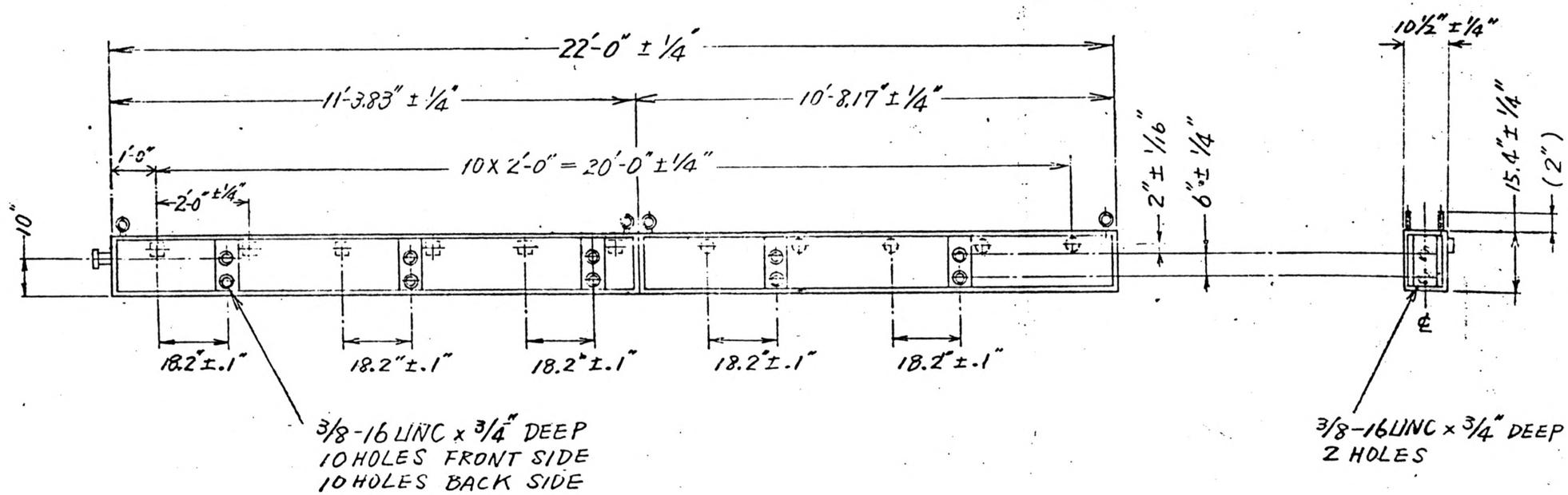

NOTE

1. OUTER SURFACE TREATING:
   COATING PAINTING (MANSEL 6Y 8.0/0.9 SILK WHITE)

OUTLINE DRAWING OF SIGNAL DISTRIBUTOR

DWN	Y. Kuwaki	1/12 '75	TITLE	Hitachi, Ltd. Tokyo, Japan
CHKD	Y. Kuwaki	1/12 '75		
APPD	K. Obi	"		

KOGANEI BRANCH DWG. NO. 6323965

6323965

6323966

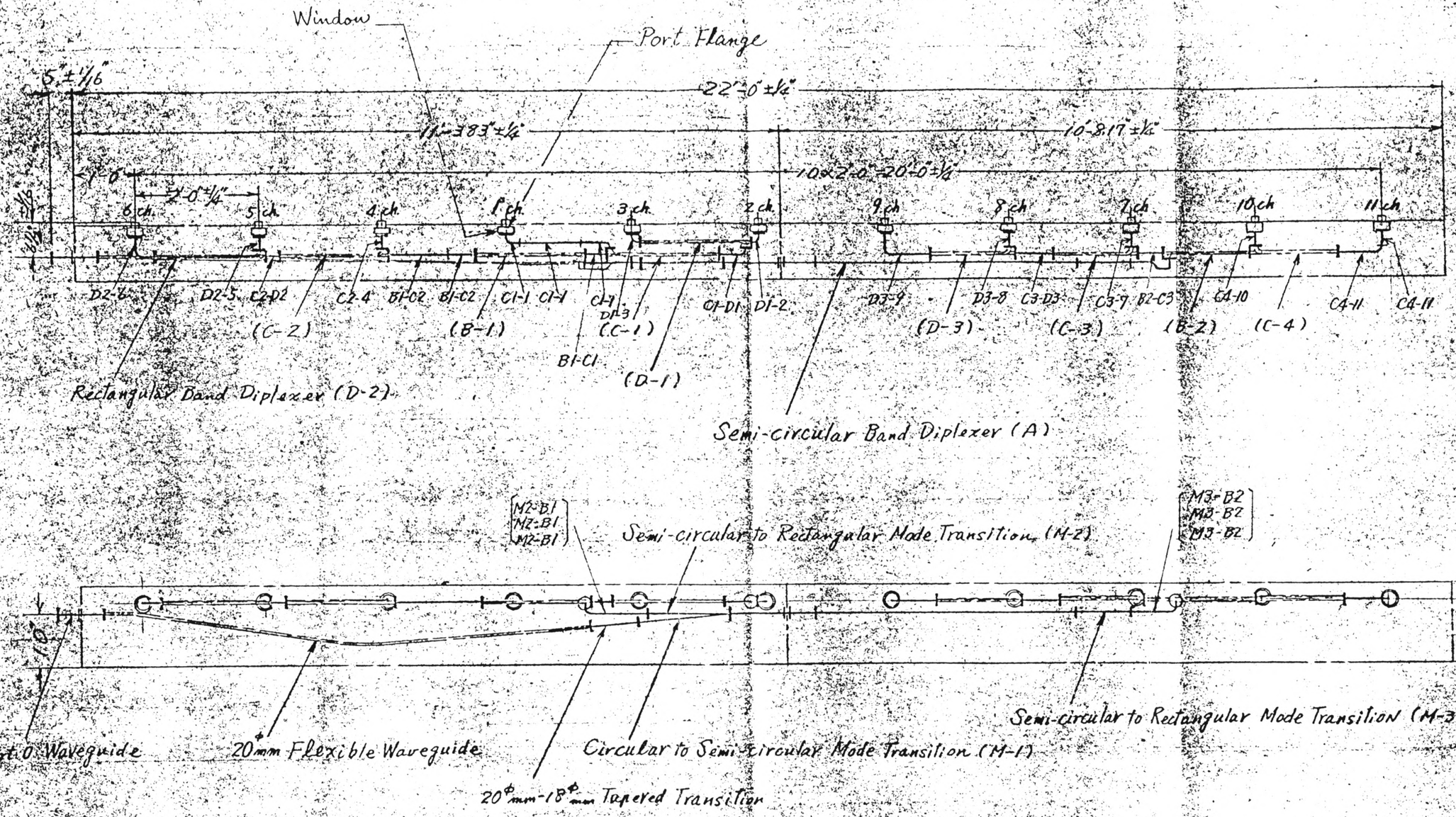

LAYOUT OF SIGNAL DISTRIBUTOR

DWN	Y. Kuwahi	7/27/71	TITLE	
CHKD	Y. Kuwahi	7/27/71		
APPD	K. Ohi			

Hitachi, Ltd.

KOGANEI BRANCH DWG. NO. 6323966

6323966

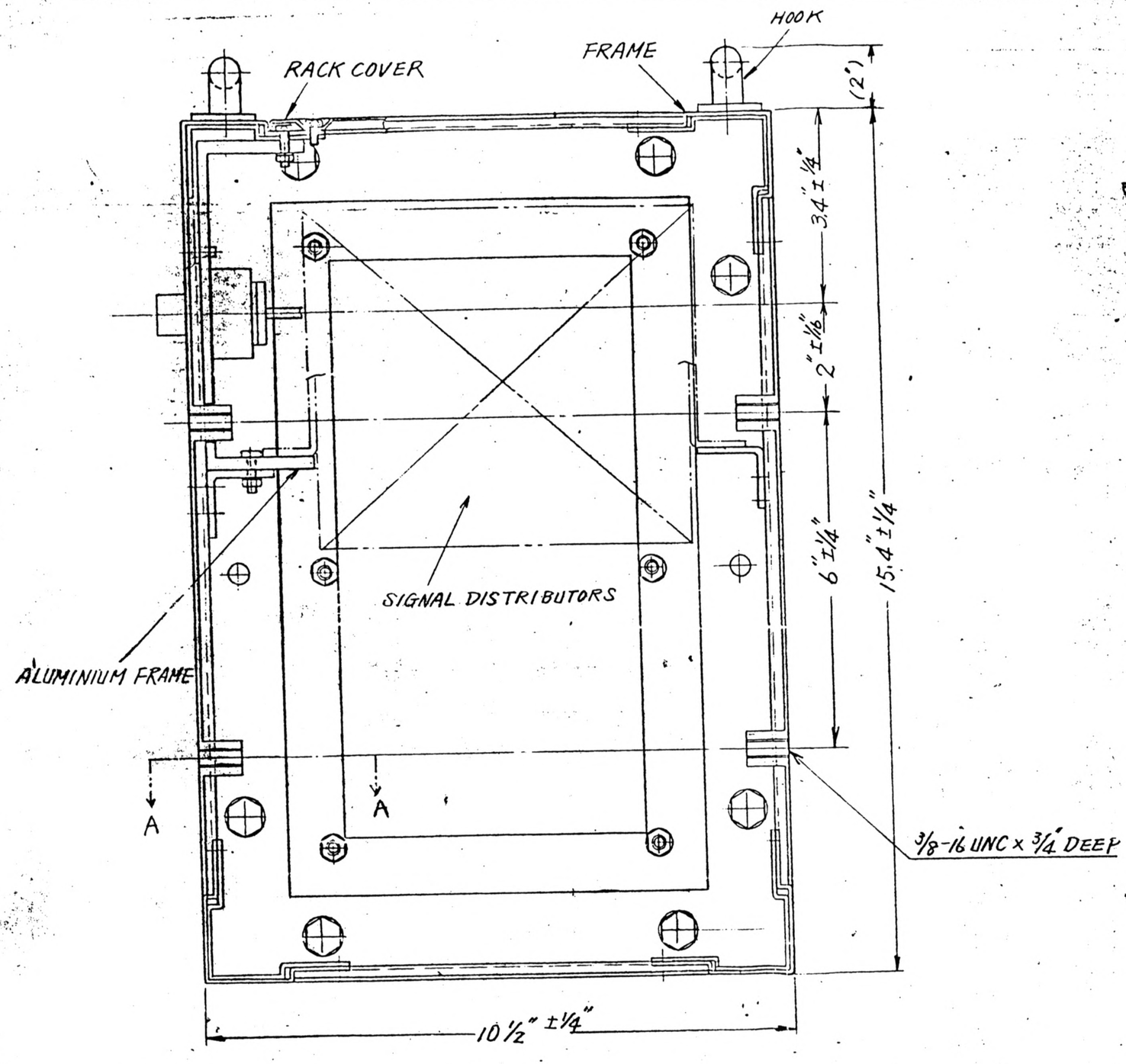

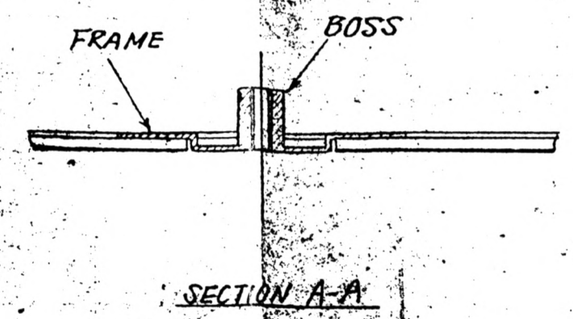

DWN	Y. Kuwaki	1/22/75	SECTION OF RACK	Hitachi, Ltd.
CHKD	Y. Kuwaki	1/28/75		
APPD	K. Ohi	"		

KOGANEI BRANCH DWG. NO. 6323967

6323967

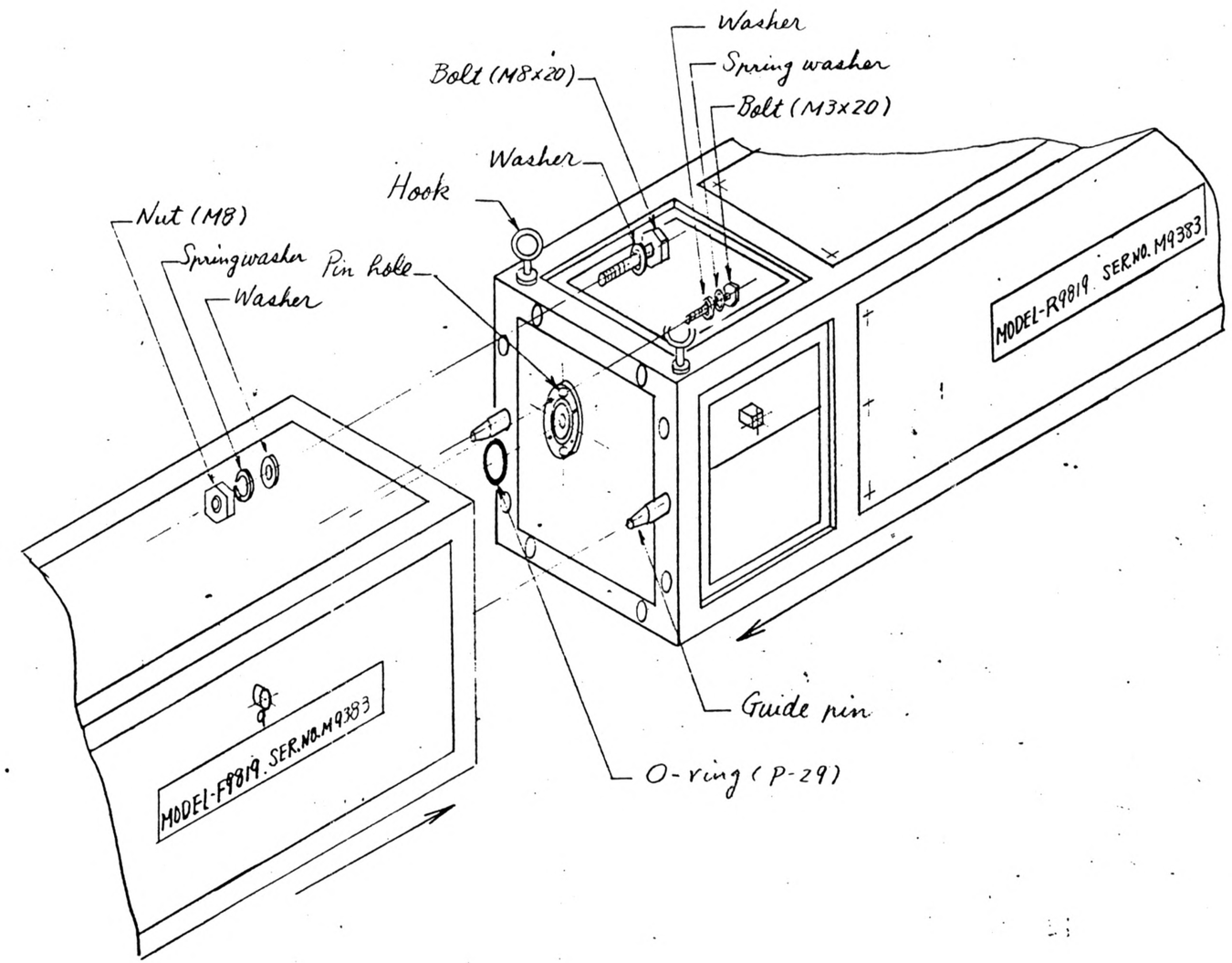

DWN	Y. Kuwaki	1/12/'75	TITLE RACK ASSEMBLY DRAWING	Hitachi, Ltd. Tokyo Japan	KOGANEI BRANCH DWG. NO. 6323968
CHKD	Y. Kuwaki	"			
APPD	K. Ohi	"			

6323968

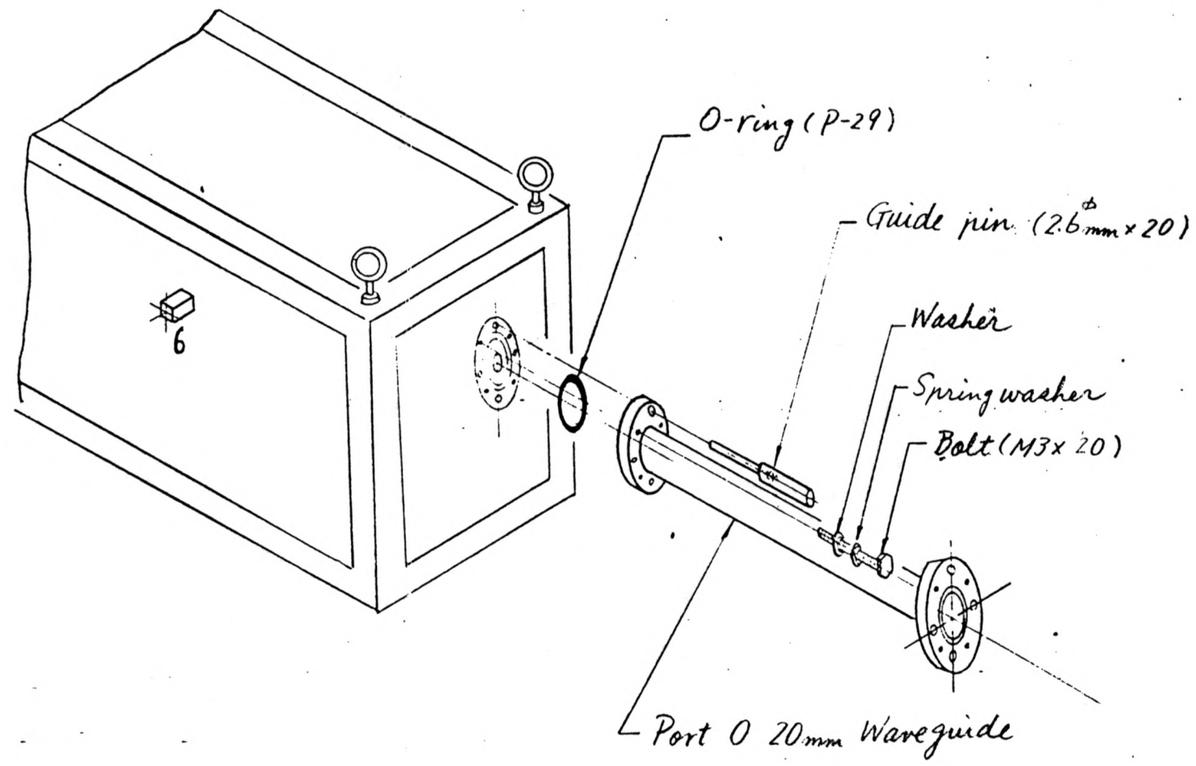

ASSEMBLY DRAWING OF PORT 0 20mm WAVEGUIDE

DWN	Y. Kuwahi	1/12/'75	TITLE	Hitachi, Ltd. Tokyo Japan	KOGANEI BRANCH DWG. NO. 6323969
CHKD	Y. Kuwahi	"			
APPD	K. Ohi	"			

6323969

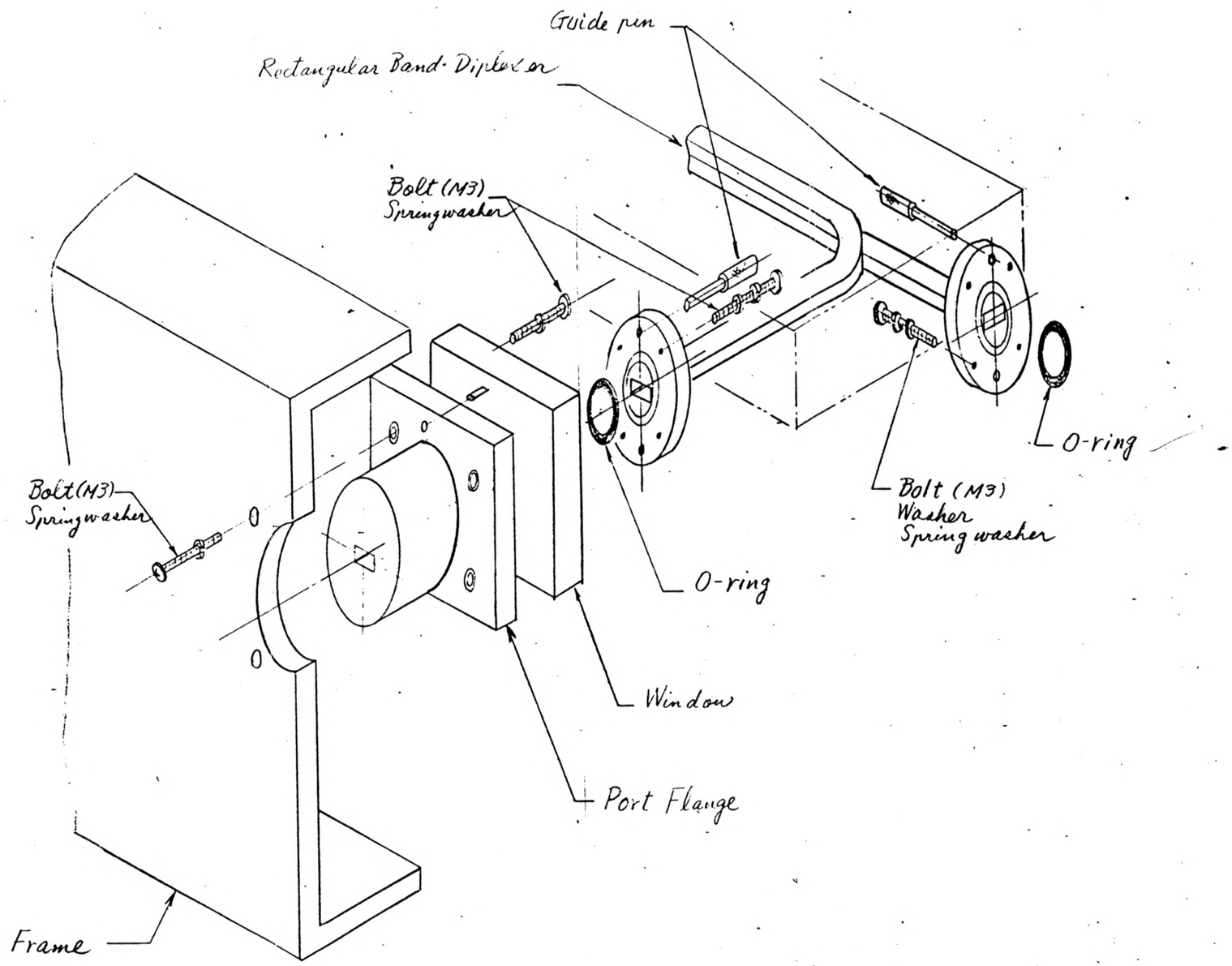

ASSEMBLY DRAWING OF PORT FLANGE AND WINDOW

DWN	Y. Kuroki	1/12/75	TITLE	Hitachi, Ltd. Tokyo Japan	KOGANEI BRANCH DWG. NO. 6323970
CHKD	Y. Kuroki	"			
APPD	K. Oki	"			

6323970

HITACHI DENSHI AMERICA, LTD.

58-25 Brooklyn-Queens Expressway, Woodside, N.Y.

11377, U.S.A.

Tel: (212) 898-1261, TELEX: 424304

HITACHI DENSHI, LTD.

Head Office: 1-23-2, Kanda Suda-cho, Chiyoda-ku,

Tokyo 101, Japan

Koganei Works: 32 Miyuki-cho, Kodaira-chi, Tokyo

187, Japan